1/93

SOFTWARE RELEASE NOTICE

1. SRN Number: GHGC-SRN255	
2. Project Title: Unsaturated and Saturated Flow under Isothermal Conditions (USFIC)	Project No.20.01402.861
3. SRN Title: Groundwater Modeling System (GMS) version 3.1	
4. Originator/Requestor: C. Manepally	Date: 9/24/01

5. Summary of Actions

- ■ Release of new software - Executable only
- ☐ Change of access software
- ☐ Release of modified software:
  - ☐ Enhancements made
  - ☐ Corrections made
- ☐ Software Retirement

6. Validation Status

☐ Validated ■ Limited Validation ☐ Not Validated

Explain: Specific Modules of the software are validated

6. Persons Authorized Access

Name	Read Only/Read-Write	Addition/Change/Delete
J. Winterle		Addition
C. Manepally		Addition
C. Dinwiddie		Addition

7. Element Manager Approval: C. C. Ray Date: 9/24/2001

9. Remarks GMS v 3.1 executable obtained from the Environmental Modeling Systems Inc.
Modules being validated
1. MODFLOW 96
2. Pest
3. UCODE
4. MODPATH
5. MT3D

2/93

SOFTWARE SUMMARY FORM

01. Summary Date: 9/24/01	02. Summary prepared by (Name and phone): Chandrika Manepally 210-522-5182	03. Summary Action: Upgrade
04. Software Date:	05. Short Title: GMS v 3.1	
06. Software Title: Groundwater Modeling System		07. Internal Software ID:

08. Software Type: ☐ Automated Data System ■ Computer Program ☐ Subroutine/Module	09. Processing Mode: ■ Interactive ☐ Batch ☐ Combination	10. Application Area: a. General: ■ Scientific/Engineering ☐ Auxiliary Analyses ☐ Total System PA ☐ Subsystem PA ☐ Other b. Specific:
11. Submitting Organization and Address: CNWRA/SwRI 6220 Culebra Road San Antonio, TX 78228		12. Technical Contact(s) and Phone: Chandrika Manepally 210-522-5182 James Winterle 210-522-5249

13. Software Application: Development of Saturated and Unsaturated Flow and Transport Models and as a pre and post-processor

14. Computer Platform: PC	15. Computer Operating System: Windows NT	16. Programming Language(s): N/A	17. Number of Source Program Statements: N/A
18. Computer Memory Requirements: 32 MB RAM	19. Tape Drives: N/A	20. Disk Units: 1 CD (Installation)	21. Graphics: N/A

22. Other Operational Requirements:

1 single user hardware lock required to save files

23. Software Availability: ☐ Available ☐ Limited ■ In-House ONLY	24. Documentation Availability: ■ Available ☐ Preliminary ☐ In-House ONLY

25.Software Developer: Date: 9/24/01
EMS-I, 1204 W. South Jordan Parkway, Suite B
South Jordan, UT 84095-4600 CM

9/23/02

CNWRA Form TOP-4-1 (05/98)

3/93

CENTER FOR NUCLEAR WASTE REGULATORY ANALYSES
QA VERIFICATION REPORT
FOR
→ *ACQUIRED SOFTWARE NOT TO BE MODIFIED* ←

Software Title/Name: GMS (Modflow 96)

Version: 3.1

Demonstration workstation: Snoopy

Operating System: Windows NT

User: C. Manepally

NOTE: Acquired software may or may not meet all requirements and will be evaluated on a case-by-case basis.

Installation Testing [TOP-018, Section 5.6]

Has *installation testing* been conducted for each intended computer platform and operating system?

Yes: ☑ No: ☐ N/A: ☐

Computer Platforms: PC Operating Systems: Windows NT

Location of ~~Acceptance~~ Test Results: See attached.

Comments:. Rev 7/3/02

Software Output [TOP-018, Section 5.5.4]

Is software designed so that individual runs are uniquely identified by date, time, name of software and version?

Yes: ☐ No: ☑ N/A: ☐

Date and Time Displayed:____

Name/Version Displayed: → MODFLOW on output file.

Comments: The user must add version, date, & time on output.

NOTE: Output identification content and format is typically taken as is.

Medium Documentation [TOP-018, Section 5.5.6]

The physical labeling of software medium (tapes, disks, etc.) contains: Program Name, Module/Name/Title, Module Revision, File type (ASCII, OBJ, EXE), Recording Date, and Operating System(s)?

Yes: ☑ No: ☐ N/A: ☐

Comments:

4/93

CENTER FOR NUCLEAR WASTE REGULATORY ANALYSES
QA VERIFICATION REPORT
FOR
→ACQUIRED SOFTWARE NOT TO BE MODIFIED←

User Documentation [TOP-018, Section 5.5.7]

Is there a Users' Manual for the software and is it up-to-date?

Yes: ☑ No: ☐ N/A: ☐

User's Manual Version and Date: GMS 3.1 on-line helpfiles
Comments:

Are there basic instructions for the *installation* and *use* of the software?

Yes: ☑ No: ☐ N/A: ☐

Location of Instructions: On CD - self installation
Comments:

Configuration Control [TOP-018, Section 5.7, 5.9.3]

Is the Software Summary Form (Form TOP-4-1) completed and signed?

Yes: ☑ No: ☐ N/A: ☐

Date of Approval: 9/24/01

Is the list of files attached to the Software Summary Form complete and accurate?

Yes: ☐ No: ☐ N/A: ☐

Comments:

Is the source code available or, is the executable code available in the case of (acquired/commercial codes)?

Yes: ☑ No: ☐ N/A: ☐

Location of Source Code: on CD
Comments: Must have hardware lock to use full capability of software

Have all the script/make files and executable files been submitted to the Software Custodian?
Only the executable files are being submitted.

Yes: ☑ No: ☐ N/A: ☐

Location of executable files: On CD
Comments:

5/93

CENTER FOR NUCLEAR WASTE REGULATORY ANALYSES
QA VERIFICATION REPORT
FOR
→ *ACQUIRED SOFTWARE NOT TO BE MODIFIED* ←

Software Release [TOP-018, Section 5.9]

Upon acceptance of the software as verified above, has a Software Release Notice (SRN), Form TOP-6 been issued and does the version number of the software match the documentation?

Yes: ☑ No: ☐ N/A: ☐

SRN Number: GHGC-SRN-255

Comments:

Software Validation [TOP-018, Section 5.10]

Has a Software Validation Test Plan (SVTP) been prepared for the ***range of application*** of the software?

Yes: ☑ No: ☐ N/A: ☐

Version and Date of SVTP: June 20, 2002

Date Reviewed and Approved via QAP-002: 6/24/2002

Comments: MODFLOW 96 only.

Has a Software Validation Test Report (SVTR) been prepared that documents the results of the validation cases, interpretation of the results, and determination if the software has been validated?

Yes: ☐ No: ☑ N/A: ☐

Version and Date of SVTR: ____

Date Reviewed and Approved via QAP-002: ____

Comments.: To be Completed August 15, 2002.

Additional Comments:

M Chu 07/03/02
Software Evaluator/User/Date

Software Custodian/Date

GMS (modflow) sample output of actual run 6/93
Printed July 3, 2002.

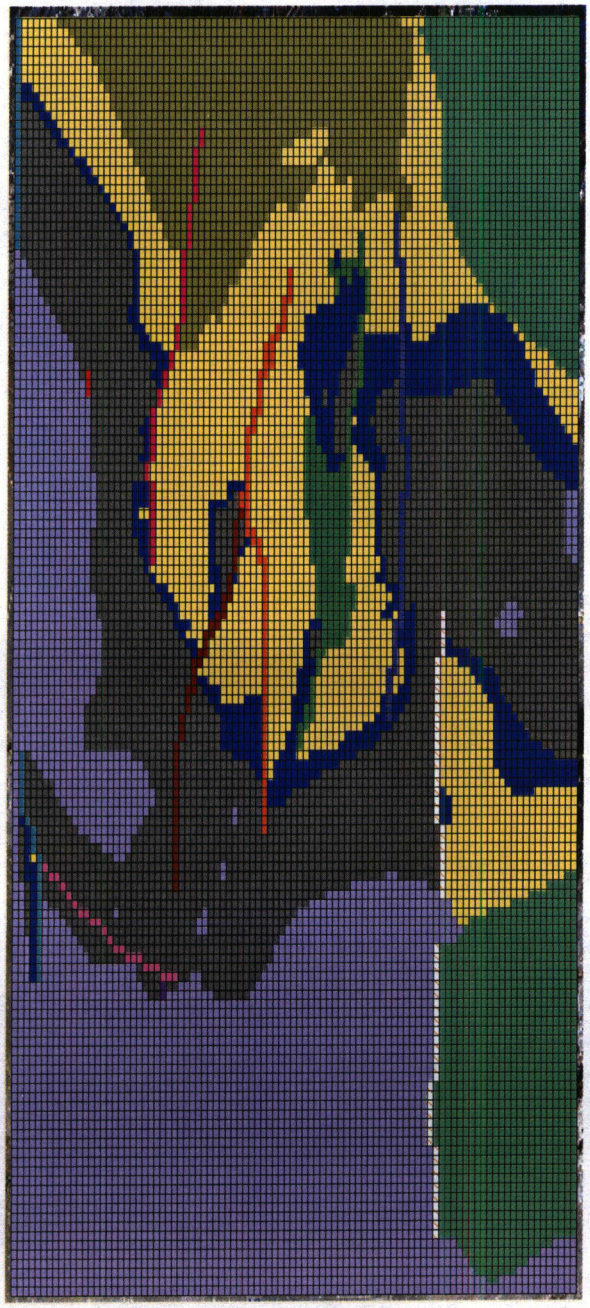

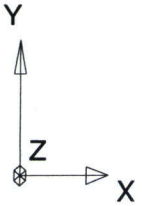

7/93

```
 Volume in drive E is EMS-i
 Volume Serial Number is 1BCC-FF71


 Directory of E:\

06/26/02  05:11p        <DIR>          .
06/26/02  05:11p        <DIR>          ..
12/29/97  05:58p                    30 AUTORUN.INF
12/18/00  12:07p                    86 dates.txt
06/26/02  05:06p        <DIR>          Gms
06/26/02  05:05p        <DIR>          SMS
10/20/98  03:06p               999,424 splash.exe
06/26/02  05:06p        <DIR>          Utils
06/26/02  05:04p        <DIR>          WMS
               9 File(s)        999,540 bytes

 Directory of E:\Gms

06/26/02  05:06p        <DIR>          .
06/26/02  05:06p        <DIR>          ..
06/26/02  05:07p        <DIR>          pc
               3 File(s)              0 bytes

 Directory of E:\Gms\pc

06/26/02  05:07p        <DIR>          .
06/26/02  05:07p        <DIR>          ..
12/07/00  11:54a                    90 DATA.TAG
12/07/00  11:55a                62,711 data1.cab
06/26/02  05:07p        <DIR>          docs
05/30/97  11:31a                 4,557 lang.dat
06/26/02  05:07p        <DIR>          latlon
12/07/00  11:55a                   353 layout.bin
06/26/02  05:07p        <DIR>          mergeavi
06/26/02  05:07p        <DIR>          models
05/06/97  02:15p                   417 os.dat
06/26/02  05:07p        <DIR>          program
08/08/00  03:09p                27,078 setup.bmp
12/17/97  06:30p                59,904 SETUP.EXE
12/07/00  11:54a                    72 SETUP.INI
12/07/00  11:13a                60,524 setup.ins
12/07/00  11:55a                    49 setup.lid
06/26/02  05:07p        <DIR>          tutorial
12/17/97  06:47p               290,586 _INST32I.EX_
12/17/97  06:30p                 8,192 _ISDEL.EXE
12/17/97  06:29p                11,264 _SETUP.DLL
12/07/00  11:54a               208,590 _sys1.cab
12/07/00  11:54a                51,283 _user1.cab
              23 File(s)        785,670 bytes

 Directory of E:\Gms\pc\docs

06/26/02  05:07p        <DIR>          .
06/26/02  05:07p        <DIR>          ..
```

8/93

```
02/26/98  10:25a              425,372 femwref.pdf
08/25/00  02:53p              140,555 modflow96I.pdf
11/02/98  09:35a            9,385,088 modflow88I.pdf
08/25/00  11:59a              426,831 modflow96II.pdf
02/18/98  10:31a              817,156 mpathref.pdf
11/17/99  07:59a            2,077,777 mt3dmanual.pdf
06/26/02  05:07p        <DIR>         Nuft
06/06/00  09:48a            1,080,433 PEST.pdf
11/02/98  01:02p              289,991 rt3dman.pdf
09/12/00  01:38p              467,770 rt3dtut31.pdf
10/04/99  09:15a               33,897 rt3dv2man1.pdf
10/19/99  12:33p              108,023 s2dprimr.pdf
10/18/99  05:54a            1,235,587 SEAM3Dv2.pdf
09/12/00  12:02p            1,865,784 tutor31.pdf
08/25/00  03:11p              328,857 ucode.pdf
08/25/00  03:03p              302,803 UTCHEM_Users_Guide.pdf
08/25/00  03:04p            2,864,997 UTCHEM_Tech_Doc.pdf
              19 File(s)    21,850,921 bytes

 Directory of E:\Gms\pc\docs\Nuft

06/26/02  05:07p        <DIR>         .
06/26/02  05:07p        <DIR>         ..
01/05/00  04:18a              148,687 addendum.doc
06/10/98  07:38a              373,518 bookapp.pdf
07/27/99  12:33p              338,002 nuftchapter.pdf
06/10/98  07:38a              138,507 nuftdes.pdf
06/10/98  07:38a              658,689 nuftdes.ps
06/10/98  07:38a              263,161 refman.pdf
06/10/98  07:38a              234,356 us1man.pdf
06/10/98  07:38a              317,188 usntman.pdf
              10 File(s)     2,472,108 bytes

 Directory of E:\Gms\pc\latlon

06/26/02  05:07p        <DIR>         .
06/26/02  05:07p        <DIR>         ..
08/12/99  12:31p              530,000 alaska.las
08/12/99  12:31p              530,000 alaska.los
07/07/99  02:18p                2,704 alhpgn.las
07/07/99  02:18p                2,704 alhpgn.los
07/07/99  02:19p                4,624 azhpgn.las
07/07/99  02:19p                4,624 azhpgn.los
07/07/99  02:19p                5,520 cnhpgn.las
07/07/99  02:19p                5,520 cnhpgn.los
07/07/99  02:19p                3,952 cohpgn.las
07/07/99  02:19p                3,952 cohpgn.los
08/12/99  12:31p              133,712 conus.las
08/12/99  12:31p              133,712 conus.los
07/07/99  02:19p                3,344 cshpgn.las
07/07/99  02:19p                3,344 cshpgn.los
07/07/99  02:19p                6,384 emhpgn.las
07/07/99  02:19p                6,384 emhpgn.los
07/07/99  02:19p                8,568 ethpgn.las
07/07/99  02:19p                8,568 ethpgn.los
07/07/99  02:19p                4,624 flhpgn.las
07/07/99  02:19p                4,624 flhpgn.los
```

9/93

07/07/99	02:19p	2,704	gahpgn.las
07/07/99	02:19p	2,704	gahpgn.los
08/12/99	12:31p	227,856	hawaii.las
08/12/99	12:31p	227,856	hawaii.los
07/07/99	02:20p	3,536	hihpgn.las
07/07/99	02:20p	3,536	hihpgn.los
07/07/99	02:20p	3,344	kshpgn.las
07/07/99	02:20p	3,344	kshpgn.los
07/07/99	02:20p	2,736	kyhpgn.las
07/07/99	02:20p	2,736	kyhpgn.los
07/07/99	02:20p	3,600	lahpgn.las
07/07/99	02:20p	3,600	lahpgn.los
07/07/99	02:20p	1,872	mdhpgn.las
07/07/99	02:20p	1,872	mdhpgn.los
07/07/99	02:20p	2,704	mehpgn.las
07/07/99	02:20p	2,704	mehpgn.los
07/07/99	02:20p	4,560	mihpgn.las
07/07/99	02:20p	4,560	mihpgn.los
07/07/99	02:21p	3,120	mshpgn.las
07/07/99	02:21p	3,120	mshpgn.los
08/17/99	10:03a	57,888	nad27sp
08/17/99	10:03a	57,888	nad83sp
07/07/99	02:21p	3,024	nbhpgn.las
07/07/99	02:21p	3,024	nbhpgn.los
07/07/99	02:21p	3,696	ndhpgn.las
07/07/99	02:21p	3,696	ndhpgn.los
07/07/99	02:22p	2,704	nehpgn.las
07/07/99	02:22p	2,704	nehpgn.los
07/07/99	02:22p	4,560	nmhpgn.las
07/07/99	02:22p	4,560	nmhpgn.los
07/07/99	02:22p	4,080	nvhpgn.las
07/07/99	02:22p	4,080	nvhpgn.los
12/07/99	02:16p	4,784	nyhpgn.las
12/07/99	02:17p	4,784	nyhpgn.los
07/07/99	02:22p	2,288	ohhpgn.las
07/07/99	02:22p	2,288	ohhpgn.los
07/07/99	02:22p	3,696	okhpgn.las
07/07/99	02:22p	3,696	okhpgn.los
08/12/99	12:31p	13,776	prvi.las
08/12/99	12:31p	13,776	prvi.los
07/07/99	02:22p	1,664	pvhpgn.las
07/07/99	02:23p	1,664	pvhpgn.los
07/07/99	02:23p	4,368	sdhpgn.las
07/07/99	02:23p	4,368	sdhpgn.los
08/12/99	12:31p	30,256	stgeorge.las
08/12/99	12:31p	30,256	stgeorge.los
08/12/99	12:31p	13,776	stlrnc.las
08/12/99	12:31p	13,776	stlrnc.los
08/12/99	12:31p	3,696	stpaul.las
08/12/99	12:31p	3,696	stpaul.los
07/07/99	02:23p	2,352	tnhpgn.las
07/07/99	02:23p	2,352	tnhpgn.los
07/07/99	02:23p	4,080	uthpgn.las
07/07/99	02:23p	4,080	uthpgn.los
07/07/99	02:24p	2,736	vahpgn.las
07/07/99	02:24p	2,736	vahpgn.los
08/16/99	11:18a	964,656	vertconc.94

10/93

```
08/16/99  11:18a              964,656 vertcone.94
08/16/99  11:18a              964,656 vertconw.94
07/07/99  02:24p                3,536 wihpgn.las
07/07/99  02:24p                3,536 wihpgn.los
07/07/99  02:24p                6,384 wmhpgn.las
07/07/99  02:24p                6,384 wmhpgn.los
07/07/99  02:24p                5,776 wohpgn.las
07/07/99  02:24p                5,776 wohpgn.los
07/07/99  02:24p                6,800 wthpgn.las
07/07/99  02:24p                6,800 wthpgn.los
07/07/99  02:24p                2,728 wvhpgn.las
07/07/99  02:25p                2,728 wvhpgn.los
07/07/99  02:25p                2,992 wyhpgn.las
07/07/99  02:25p                2,992 wyhpgn.los
              93 File(s)      5,196,176 bytes

 Directory of E:\Gms\pc\mergeavi

06/26/02  05:07p        <DIR>          .
06/26/02  05:07p        <DIR>          ..
06/11/98  12:09p               61,952 mergavi.doc
06/11/98  01:46p               50,688 mergeavi.exe
06/09/98  02:59p              956,928 RT3D.AVI
               5 File(s)      1,069,568 bytes

 Directory of E:\Gms\pc\models

06/26/02  05:07p        <DIR>          .
06/26/02  05:07p        <DIR>          ..
10/30/98  05:09p              390,988 batchrxn.exe
06/23/00  10:43a              872,448 femwater.exe
06/26/02  05:07p        <DIR>          fwsrc
06/23/00  10:48a              327,680 gms2pest.exe
09/18/00  09:45a              327,680 gms2ucode.exe
06/23/00  12:05p               20,480 jacrxns.dll
06/26/02  05:07p        <DIR>          mf96src
06/23/00  02:53p              483,328 modflow.exe
10/19/00  11:50a              671,744 modflow96.exe
06/23/00  10:54a              602,112 modpath.exe
08/16/00  09:22a              602,112 modpath96.exe
06/26/02  05:07p        <DIR>          mp96src
07/26/00  06:19p              745,173 mrdrive.exe
10/06/00  05:17p              516,096 mt3dms.exe
06/26/02  05:07p        <DIR>          mtsrc
01/21/00  02:25p            1,114,112 nuft.exe
03/10/00  01:20p               50,176 perl.exe
03/10/00  01:20p              523,776 perlcore.dll
03/10/00  01:20p              277,504 PerlCRT.dll
11/03/99  05:04p               10,525 PEST.EER
03/06/00  04:34a              573,952 pest.exe
06/23/00  11:09a              675,840 rt3d.exe
06/23/00  12:05p               20,480 rxns.dll
06/23/00  11:19a              565,248 seam3d.exe
06/23/00  11:23a              442,368 seep2d.exe
06/26/02  05:07p        <DIR>          spsrc
08/23/00  05:05a              228,416 ucode
06/12/00  05:48p            1,761,280 utchem9.exe
```

11/93

```
              30 File(s)     11,803,518 bytes

 Directory of E:\Gms\pc\models\fwsrc

06/26/02  05:07p        <DIR>          .
06/26/02  05:07p        <DIR>          ..
11/16/99  09:16a               841,155 femwater.f
11/19/99  12:58p                 2,488 gwpara.inc
               4 File(s)       843,643 bytes

 Directory of E:\Gms\pc\models\mf96src

06/26/02  05:07p        <DIR>          .
06/26/02  05:07p        <DIR>          ..
08/15/00  04:32p                53,910 bas5.f
08/15/00  04:32p                51,806 bcf5.f
08/15/00  04:32p                 6,583 chd1.f
08/15/00  04:32p                26,646 de45.f
08/15/00  04:32p                11,404 drn5.f
08/15/00  04:32p                 4,364 drycell.f
08/15/00  04:32p                10,442 evt5.f
08/15/00  04:32p                22,490 fhb1.f
08/15/00  04:32p                32,287 gfd1.f
08/15/00  04:32p                11,144 ghb5.f
08/15/00  04:32p                11,893 hfb1.f
08/15/00  04:32p                17,216 ibs1.f
08/15/00  04:32p                19,207 layers.f
08/15/00  04:32p                21,486 lkmt3.f
08/15/00  04:32p                 2,595 lkmt3.inc
08/15/00  04:32p                18,339 modsub.f
08/15/00  04:32p                36,695 observ.f
08/15/00  04:32p                27,435 pcg2.f
08/15/00  04:32p                11,006 rch5.f
08/15/00  04:32p                16,925 res1.f
08/15/00  04:32p                12,331 riv5.f
08/15/00  04:32p                16,847 sip5.f
08/15/00  04:32p                11,195 sor5.f
08/29/00  10:22a                31,582 str1.f
08/15/00  04:32p                25,608 tlk1.f
08/15/00  04:34p                29,540 unix_modflow96.f
08/15/00  04:32p                42,170 utl5.f
08/15/00  04:32p                10,392 wel5.f
              30 File(s)       593,538 bytes

 Directory of E:\Gms\pc\models\mp96src

06/26/02  05:07p        <DIR>          .
06/26/02  05:07p        <DIR>          ..
08/16/00  09:06a                31,566 flowdata.f
08/16/00  09:06a                 8,597 mpath3.f
08/16/00  09:06a                30,799 mpdatin.f
08/16/00  09:06a                19,991 mpdrive.f
08/16/00  09:06a                10,805 mpinit.f
08/16/00  09:06a                18,286 mpmove.f
08/16/00  09:06a                21,421 mpspinp.f
08/16/00  09:06a                32,263 prs.f
08/16/00  09:06a                15,274 startloc.f
```

12/93

```
08/16/00  09:06a                2,919 sys.f
08/16/00  09:06a                8,685 unix_mpath3.f
08/16/00  09:06a               42,166 utilmf.f
08/16/00  09:06a               40,257 utilmp.f
08/16/00  09:06a                3,164 writpts.f
              16 File(s)      286,193 bytes

 Directory of E:\Gms\pc\models\mtsrc

06/26/02  05:07p        <DIR>          .
06/26/02  05:07p        <DIR>          ..
08/15/00  04:52p               94,239 adv350.f
08/15/00  04:52p               47,464 btn350.f
08/15/00  04:52p               39,928 dsp350.f
08/15/00  04:52p               33,619 fmi350.f
08/15/00  04:52p               25,602 gcg350.f
08/15/00  04:52p               28,595 main350.f
08/15/00  04:52p               39,436 rct350.f
08/15/00  04:52p               27,786 ssm350.f
08/15/00  04:53p               28,608 unix_main350.f
08/15/00  04:52p               25,323 utl350.f
              12 File(s)      390,600 bytes

 Directory of E:\Gms\pc\models\spsrc

06/26/02  05:07p        <DIR>          .
06/26/02  05:07p        <DIR>          ..
08/23/99  01:23p                  115 seep.inc
11/08/99  12:15p               71,129 seep2d.f
               4 File(s)        71,244 bytes

 Directory of E:\Gms\pc\program

06/26/02  05:07p        <DIR>          .
06/26/02  05:07p        <DIR>          ..
03/14/95  02:57p               19,968 CHECK32.DLL
08/11/99  10:40a                3,310 gms.ico
12/05/00  10:39a            5,802,980 gms31.chm
12/06/00  01:51p           10,059,776 gms31.exe
03/27/97  06:20a              118,272 NSLMS324.DLL
09/11/00  11:51a                5,693 Readme.txt
               8 File(s)    16,009,999 bytes

 Directory of E:\Gms\pc\tutorial

06/26/02  05:07p        <DIR>          .
06/26/02  05:07p        <DIR>          ..
06/26/02  05:07p        <DIR>          calib
06/26/02  05:07p        <DIR>          femwater
06/26/02  05:07p        <DIR>          geos2d
06/26/02  05:07p        <DIR>          geos3d
06/26/02  05:07p        <DIR>          inverse
06/26/02  05:07p        <DIR>          layerdata
06/26/02  05:07p        <DIR>          modfgrid
06/26/02  05:07p        <DIR>          modfmap
06/26/02  05:07p        <DIR>          modpath
06/26/02  05:07p        <DIR>          mt3dgrid
```

13/53

```
06/26/02  05:07p        <DIR>          mt3dmap
06/26/02  05:07p        <DIR>          other
06/26/02  05:07p        <DIR>          reg2loc
06/26/02  05:07p        <DIR>          rt3d
06/26/02  05:07p        <DIR>          s2con
06/26/02  05:07p        <DIR>          s2unc
06/26/02  05:07p        <DIR>          seam3d
06/26/02  05:07p        <DIR>          solids
06/26/02  05:07p        <DIR>          tins
06/26/02  05:07p        <DIR>          trans
06/26/02  05:07p        <DIR>          utchem
              23 File(s)              0 bytes

 Directory of E:\Gms\pc\tutorial\calib

06/26/02  05:07p        <DIR>          .
06/26/02  05:07p        <DIR>          ..
04/18/00  04:18p                35,075 answer.map
09/17/99  02:12p                    86 bigval.gpr
09/17/99  02:12p                50,007 bigval.ini
09/17/99  02:12p                26,133 bigval.map
04/18/00  04:07p                 2,396 obswells.map
09/12/00  03:13p                74,582 run1.bas
09/12/00  03:13p               136,939 run1.bcf
09/12/00  03:13p                11,820 run1.hed
09/12/00  03:13p                62,335 run1.hff
09/12/00  03:13p               206,486 run1.lyr
09/12/00  03:13p                   250 run1.mfn
09/12/00  03:13p                   371 run1.mfs
03/10/00  01:46p                   222 run1.nam
09/12/00  03:13p                   126 run1.oc
09/12/00  03:13p                   109 run1.pcg
09/12/00  03:13p                68,373 run1.rch
09/12/00  03:13p                 9,132 run1.riv
09/12/00  03:13p                   108 run1.wel
09/12/00  03:13p                70,872 run140.ccf
              21 File(s)       755,422 bytes

 Directory of E:\Gms\pc\tutorial\femwater

06/26/02  05:07p        <DIR>          .
06/26/02  05:07p        <DIR>          ..
11/18/99  02:28p                   349 elevs.sp2
02/02/99  05:16p               764,626 ludlow.tif
06/26/02  05:07p        <DIR>          sample
08/18/00  09:49a                    47 start.gpr
08/18/00  09:49a                   199 start.img
08/18/00  09:49a                49,823 start.ini
02/23/99  04:09p                32,224 terrain.sp2
               9 File(s)       847,268 bytes

 Directory of E:\Gms\pc\tutorial\femwater\sample

06/26/02  05:07p        <DIR>          .
06/26/02  05:07p        <DIR>          ..
02/02/99  05:16p               764,626 ludlow.tif
11/02/99  01:55p               111,691 sample.2dm
```

```
11/02/99  01:55p                49,560 sample.3bc
11/02/99  01:55p               751,797 sample.3dm
11/02/99  11:23a                 2,412 sample.dat
11/02/99  01:55p                   168 sample.fws
11/02/99  01:55p                   232 sample.gpr
11/02/99  01:55p                   199 sample.img
11/02/99  01:55p                49,343 sample.ini
11/30/99  11:34a                 5,541 sample.map
11/02/99  01:55p                   131 sample.mat
11/02/99  12:00p                87,687 sample.phd
11/02/99  01:55p               323,943 sample.tin
11/02/99  01:55p                27,550 sample.xy
11/02/99  01:55p                 6,898 sample2s.dat
11/02/99  01:55p                    28 sample3m.dat
11/02/99  11:23a                 9,547 sampletn.dat
11/02/99  11:18a                79,595 starthd.phd
              20 File(s)      2,270,948 bytes

 Directory of E:\Gms\pc\tutorial\geos2d

06/26/02  05:07p        <DIR>          .
06/26/02  05:07p        <DIR>          ..
10/24/00  01:27p                   360 plumedat.sp2
               3 File(s)           360 bytes

 Directory of E:\Gms\pc\tutorial\geos3d

06/26/02  05:07p        <DIR>          .
06/26/02  05:07p        <DIR>          ..
10/24/00  01:27p                 6,472 tank.sp3
               3 File(s)          6,472 bytes

 Directory of E:\Gms\pc\tutorial\inverse

06/26/02  05:07p        <DIR>          .
06/26/02  05:07p        <DIR>          ..
08/18/00  12:32p                   127 bigval.gpr
08/18/00  12:32p                45,072 bigval.ini
10/27/00  03:34a                35,355 bigval.map
08/18/00  12:32p                 1,381 bigval.plt
08/18/00  12:32p                    28 bigval3g.dat
09/12/00  03:14p                74,582 run1.bas
09/12/00  03:14p               136,939 run1.bcf
09/12/00  03:14p                11,820 run1.hed
09/12/00  03:14p                62,335 run1.hff
09/12/00  03:14p               206,486 run1.lyr
09/12/00  03:14p                   250 run1.mfn
09/12/00  03:14p                   371 run1.mfs
09/12/00  03:14p                   126 run1.oc
09/12/00  03:14p                   109 run1.pcg
09/12/00  03:14p                68,373 run1.rch
09/12/00  03:14p                 9,132 run1.riv
09/12/00  03:14p                   108 run1.wel
09/12/00  03:14p                70,872 run140.ccf
08/18/00  12:32p                    28 run1mf.dat
              21 File(s)        723,494 bytes
```

15/93

```
 Directory of E:\Gms\pc\tutorial\layerdata

06/26/02  05:07p        <DIR>          .
06/26/02  05:07p        <DIR>          ..
01/22/99  09:01a                   676 case1.sp2
01/22/99  10:04a                   667 case2.sp2
01/22/99  10:05a                   695 case3.sp2
01/22/99  10:06a                   691 case4.sp2
02/11/99  03:02p                 2,201 sampgrid.3dg
               7 File(s)         4,930 bytes

 Directory of E:\Gms\pc\tutorial\modfgrid

06/26/02  05:07p        <DIR>          .
06/26/02  05:07p        <DIR>          ..
06/26/02  05:07p        <DIR>          sample
               3 File(s)             0 bytes

 Directory of E:\Gms\pc\tutorial\modfgrid\sample

06/26/02  05:07p        <DIR>          .
06/26/02  05:07p        <DIR>          ..
09/12/00  03:16p                 1,430 sample.bas
09/12/00  03:16p                   506 sample.bcf
09/12/00  03:16p                   487 sample.drn
09/12/00  03:16p                 2,880 sample.hed
09/12/00  03:16p                14,363 sample.hff
09/12/00  03:16p                   633 sample.lyr
09/12/00  03:16p                   272 sample.mfn
09/12/00  03:16p                   363 sample.mfs
09/12/00  03:16p                   126 sample.oc
09/12/00  03:16p                    44 sample.rch
09/12/00  03:16p                    81 sample.sip
09/12/00  03:16p                   495 sample.wel
09/12/00  03:16p                19,264 sample40.ccf
              15 File(s)        40,944 bytes

 Directory of E:\Gms\pc\tutorial\modfmap

06/26/02  05:07p        <DIR>          .
06/26/02  05:07p        <DIR>          ..
09/20/99  05:42p               706,454 easttex.tif
01/11/99  04:29p                 1,296 elevs.sp2
06/26/02  05:07p        <DIR>          sample
09/02/99  11:21a                    47 start.gpr
09/20/99  05:48p                   214 start.img
09/02/99  11:21a                50,058 start.ini
01/11/99  12:10p                24,056 terrain.sp2
               9 File(s)       782,125 bytes

 Directory of E:\Gms\pc\tutorial\modfmap\sample

06/26/02  05:07p        <DIR>          .
06/26/02  05:07p        <DIR>          ..
09/12/00  03:18p               178,643 sample.bas
09/12/00  03:18p               330,589 sample.bcf
09/12/00  03:18p                 5,983 sample.drn
```

14/93

```
11/15/99  01:23p                    70 sample.gpr
09/12/00  03:18p                28,320 sample.hed
09/12/00  03:18p               152,891 sample.hff
11/15/99  01:23p                49,736 sample.ini
09/12/00  03:18p               573,308 sample.lyr
11/15/99  01:23p                22,570 sample.map
09/12/00  03:18p                   272 sample.mfn
09/12/00  03:18p                   380 sample.mfs
09/12/00  03:18p                   126 sample.oc
09/12/00  03:18p                   109 sample.pcg
09/12/00  03:18p                81,880 sample.rch
09/12/00  03:18p                    75 sample.wel
09/12/00  03:18p               197,764 sample40.ccf
              18 File(s)      1,622,716 bytes

 Directory of E:\Gms\pc\tutorial\modpath

06/26/02  05:07p        <DIR>          .
06/26/02  05:07p        <DIR>          ..
06/26/02  05:07p        <DIR>          sample
               3 File(s)              0 bytes

 Directory of E:\Gms\pc\tutorial\modpath\sample

06/26/02  05:07p        <DIR>          .
06/26/02  05:07p        <DIR>          ..
11/15/99  11:29a                 5,920 sample.drn
09/03/99  02:33p                28,320 sample.hed
11/15/99  11:29a                53,733 sample.rch
11/15/99  11:29a                   122 sample.wel
09/08/99  02:35p                 5,920 sample1.drn
11/15/99  11:29a                 2,140 sample1.ept
11/15/99  11:29a                   960 sample1.loc
11/15/99  11:29a               237,090 sample1.mdf
11/15/99  11:29a                   311 sample1.nam
11/15/99  11:29a                28,692 sample1.pth
09/08/99  02:35p                53,733 sample1.rch
11/15/99  11:29a                 1,755 sample1.rsp
11/15/99  11:29a               330,623 sample1.sum
09/08/99  02:35p                   122 sample1.wel
09/08/99  02:36p                 2,972 sample2.ept
09/08/99  02:35p                 1,215 sample2.loc
09/08/99  02:35p               237,090 sample2.mdf
09/08/99  02:48p                   250 sample2.nam
09/08/99  02:36p                47,372 sample2.pth
09/08/99  02:35p                 1,764 sample2.rsp
09/03/99  02:33p               197,764 sample40.ccf
              23 File(s)      1,237,868 bytes

 Directory of E:\Gms\pc\tutorial\mt3dgrid

06/26/02  05:07p        <DIR>          .
06/26/02  05:07p        <DIR>          ..
06/26/02  05:07p        <DIR>          sample
               3 File(s)              0 bytes

 Directory of E:\Gms\pc\tutorial\mt3dgrid\sample
```

17/93

```
06/26/02  05:07p        <DIR>          .
06/26/02  05:07p        <DIR>          ..
09/12/00  03:19p                32,736 flowmod.bas
09/12/00  03:19p                30,002 flowmod.bcf
09/12/00  03:20p                 5,180 flowmod.hed
09/12/00  03:20p                17,251 flowmod.hff
09/12/00  03:19p                30,051 flowmod.lyr
09/12/00  03:19p                   235 flowmod.mfn
09/12/00  03:19p                   364 flowmod.mfs
09/12/00  03:19p                   126 flowmod.oc
09/12/00  03:19p                    81 flowmod.sip
09/12/00  03:19p                    74 flowmod.wel
09/12/00  03:20p                20,688 flowmod40.ccf
09/09/99  09:16a                    22 sample.adv
09/09/99  09:16a                   683 sample.btn
09/09/99  09:16a                   208 sample.dsp
09/09/99  09:17a                    96 sample.dss
09/09/99  09:17a                     0 sample.mas
09/09/99  09:16a                   414 sample.mts
09/09/99  09:16a                   100 sample.ssm
09/09/99  09:17a               267,308 sample001.con
              21 File(s)        405,619 bytes

 Directory of E:\Gms\pc\tutorial\mt3dmap

06/26/02  05:07p        <DIR>          .
06/26/02  05:07p        <DIR>          ..
06/26/02  05:07p        <DIR>          sample
               3 File(s)              0 bytes

 Directory of E:\Gms\pc\tutorial\mt3dmap\sample

06/26/02  05:07p        <DIR>          .
06/26/02  05:07p        <DIR>          ..
10/25/99  02:24p                   128 sample1.adv
10/25/99  02:24p               292,663 sample1.btn
10/25/99  02:24p               107,514 sample1.dsp
10/25/99  02:26p                    96 sample1.dss
09/15/99  11:10a                     0 sample1.mas
10/25/99  02:24p                   455 sample1.mts
10/25/99  02:26p             2,696,462 sample1.out
10/25/99  02:24p                53,729 sample1.ssm
09/15/99  02:31p                   128 sample2.adv
09/15/99  02:31p               292,663 sample2.btn
09/15/99  02:31p               107,514 sample2.dsp
09/16/99  01:54p                    96 sample2.dss
09/15/99  11:40a                     0 sample2.mas
09/16/99  01:51p                   480 sample2.mts
09/15/99  04:09p                   562 sample2.rct
09/15/99  02:31p                53,729 sample2.ssm
10/25/99  02:26p               564,492 sample1001.con
09/16/99  01:54p               564,492 sample2001.con
              20 File(s)      4,735,203 bytes

 Directory of E:\Gms\pc\tutorial\other
```

```
06/26/02  05:07p        <DIR>          .
06/26/02  05:07p        <DIR>          ..
09/10/99  01:54p               190,895 bsampdat.bor
09/10/99  01:54p                    74 bsampdat.gpr
09/10/99  01:54p                50,849 bsampdat.ini
09/10/99  01:54p                   117 bsampdat.mat
11/04/97  01:39p                11,443 map.dxf
09/10/99  01:58p                 2,100 scat2d.2dg
09/10/99  01:58p                   127 scat2d.gpr
09/10/99  01:58p                50,328 scat2d.ini
09/10/99  01:58p                 2,098 scat2d.xy
09/10/99  01:58p                 6,837 scat2d2g.dat
09/10/99  01:58p                   281 scat2d2s.dat
09/10/99  01:56p                 1,892 scat3d.3dg
09/10/99  01:56p                   132 scat3d.gpr
09/10/99  01:56p                50,848 scat3d.ini
09/10/99  01:56p                   117 scat3d.mat
09/10/99  01:56p                46,130 scat3d.xyz
09/10/99  01:56p                42,397 scat3d3g.dat
09/10/99  01:56p                 2,509 scat3d3s.dat
09/10/99  01:57p                27,981 tut1.2dm
09/10/99  01:57p                12,935 tut1.bor
09/10/99  01:57p                   116 tut1.gpr
09/10/99  01:57p                49,295 tut1.ini
09/10/99  01:57p                   291 tut1.mat
09/10/99  01:57p                62,175 tut1.sol
09/10/99  01:57p                31,543 tut1.tin
              27 File(s)        643,510 bytes

 Directory of E:\Gms\pc\tutorial\reg2loc

06/26/02  05:07p        <DIR>          .
06/26/02  05:07p        <DIR>          ..
09/12/00  03:20p               176,974 regmod.bas
09/12/00  03:21p               325,229 regmod.bcf
09/17/99  05:35p                    90 regmod.gpr
09/12/00  03:21p                28,120 regmod.hed
09/17/99  05:01p                50,095 regmod.ini
09/12/00  03:21p               568,919 regmod.lyr
09/17/99  05:01p                25,788 regmod.map
09/12/00  03:21p                   272 regmod.mfn
09/12/00  03:21p                   385 regmod.mfs
09/12/00  03:21p                   126 regmod.oc
09/12/00  03:21p                   109 regmod.pcg
09/12/00  03:21p                81,253 regmod.rch
09/12/00  03:21p                 4,603 regmod.riv
09/12/00  03:21p                   141 regmod.wel
06/26/02  05:07p        <DIR>          sample
              17 File(s)      1,262,104 bytes

 Directory of E:\Gms\pc\tutorial\reg2loc\sample

06/26/02  05:07p        <DIR>          .
06/26/02  05:07p        <DIR>          ..
09/12/00  03:23p               151,934 sample.bas
09/12/00  03:23p               278,829 sample.bcf
09/12/00  03:23p                24,120 sample.hed
```

19/93

```
09/12/00  03:23p              487,778 sample.lyr
09/12/00  03:23p                  226 sample.mfn
09/12/00  03:23p                  392 sample.mfs
09/12/00  03:23p                  126 sample.oc
09/12/00  03:23p                  109 sample.pcg
09/12/00  03:23p               69,653 sample.rch
              11 File(s)     1,013,167 bytes

 Directory of E:\Gms\pc\tutorial\rt3d

06/26/02  05:07p        <DIR>          .
06/26/02  05:07p        <DIR>          ..
06/26/02  05:07p        <DIR>          btexins1
06/26/02  05:07p        <DIR>          btexkin
06/26/02  05:07p        <DIR>          flowmod
06/26/02  05:07p        <DIR>          monod
06/26/02  05:07p        <DIR>          pce1
06/26/02  05:07p        <DIR>          rlimsorp
06/26/02  05:07p        <DIR>          rxnpkgs
06/26/02  05:07p        <DIR>          userdef
              10 File(s)              0 bytes

 Directory of E:\Gms\pc\tutorial\rt3d\btexins1

06/26/02  05:07p        <DIR>          .
06/26/02  05:07p        <DIR>          ..
06/26/02  05:07p        <DIR>          sample
               3 File(s)              0 bytes

 Directory of E:\Gms\pc\tutorial\rt3d\btexins1\sample

06/26/02  05:07p        <DIR>          .
06/26/02  05:07p        <DIR>          ..
01/24/00  05:17p                  128 btexmod.adv
01/24/00  05:17p                5,667 btexmod.btn
01/24/00  05:17p                  208 btexmod.dsp
01/24/00  05:17p                  189 btexmod.dss
01/24/00  05:17p                  138 btexmod.rct
01/24/00  05:17p                  457 btexmod.rts
01/24/00  05:17p                  110 btexmod.ssm
01/24/00  05:17p              126,972 btexmod001.con
01/24/00  05:17p                8,345 btexmod001.mas
01/24/00  05:17p              126,972 btexmod002.con
01/24/00  05:17p                8,345 btexmod002.mas
              13 File(s)        277,531 bytes

 Directory of E:\Gms\pc\tutorial\rt3d\btexkin

06/26/02  05:07p        <DIR>          .
06/26/02  05:07p        <DIR>          ..
06/26/02  05:07p        <DIR>          sample
               3 File(s)              0 bytes

 Directory of E:\Gms\pc\tutorial\rt3d\btexkin\sample

06/26/02  05:07p        <DIR>          .
06/26/02  05:07p        <DIR>          ..
```

20/93

```
01/24/00  05:17p              398,677 btexcont.dxf
01/24/00  05:17p                   34 btmod.adv
01/24/00  05:17p                5,875 btmod.btn
01/24/00  05:17p                  208 btmod.dsp
01/24/00  05:17p                  553 btmod.dss
01/24/00  05:17p                  900 btmod.rct
01/24/00  05:17p                1,020 btmod.rts
01/24/00  05:17p                  150 btmod.ssm
01/24/00  05:17p              126,972 btmod001.con
01/24/00  05:18p              126,972 btmod002.con
01/24/00  05:18p              126,972 btmod003.con
01/24/00  05:18p              126,972 btmod004.con
01/24/00  05:18p              126,972 btmod005.con
01/24/00  05:18p              126,972 btmod006.con
              16 File(s)    1,169,249 bytes

 Directory of E:\Gms\pc\tutorial\rt3d\flowmod

06/26/02  05:07p        <DIR>          .
06/26/02  05:07p        <DIR>          ..
09/12/00  03:26p               40,253 flomod1.bas
09/12/00  03:26p                  233 flomod1.bcf
09/12/00  03:26p                6,384 flomod1.hed
09/12/00  03:26p               20,791 flomod1.hff
09/12/00  03:26p                  282 flomod1.lyr
09/12/00  03:26p                  235 flomod1.mfn
09/12/00  03:26p                  364 flomod1.mfs
09/12/00  03:26p                  126 flomod1.oc
09/12/00  03:26p                  109 flomod1.pcg
09/12/00  03:26p                   41 flomod1.wel
09/12/00  03:26p               25,504 flomod140.ccf
              13 File(s)        94,322 bytes

 Directory of E:\Gms\pc\tutorial\rt3d\monod

06/26/02  05:07p        <DIR>          .
06/26/02  05:07p        <DIR>          ..
06/26/02  05:07p        <DIR>          sample
               3 File(s)              0 bytes

 Directory of E:\Gms\pc\tutorial\rt3d\monod\sample

06/26/02  05:07p        <DIR>          .
06/26/02  05:07p        <DIR>          ..
01/24/00  05:18p                  128 bacteria.adv
01/24/00  05:18p                5,771 bacteria.btn
01/24/00  05:18p                  208 bacteria.dsp
01/24/00  05:18p                  371 bacteria.dss
01/24/00  05:18p                  494 bacteria.rct
01/24/00  05:18p                  748 bacteria.rts
01/24/00  05:18p                  130 bacteria.ssm
01/24/00  05:18p              126,972 bacteria001.con
01/24/00  05:18p              126,972 bacteria002.con
01/24/00  05:18p              126,972 bacteria003.con
01/24/00  05:18p              126,972 bacteria004.con
              13 File(s)       515,738 bytes
```

21/93

```
 Directory of E:\Gms\pc\tutorial\rt3d\pce1

06/26/02  05:07p        <DIR>          .
06/26/02  05:07p        <DIR>          ..
06/26/02  05:07p        <DIR>          sample
               3 File(s)              0 bytes

 Directory of E:\Gms\pc\tutorial\rt3d\pce1\sample

06/26/02  05:07p        <DIR>          .
06/26/02  05:07p        <DIR>          ..
01/24/00  05:18p                    34 rtmod.adv
01/24/00  05:18p                   904 rtmod.btn
01/24/00  05:18p                   208 rtmod.dsp
01/24/00  05:18p                   371 rtmod.dss
01/24/00  05:18p                   470 rtmod.rct
01/24/00  05:18p                   633 rtmod.rts
01/24/00  05:18p                   130 rtmod.ssm
01/24/00  05:18p               126,972 rtmod001.con
01/24/00  05:18p               126,972 rtmod002.con
01/24/00  05:19p               126,972 rtmod003.con
01/24/00  05:19p               126,972 rtmod004.con
              13 File(s)        510,638 bytes

 Directory of E:\Gms\pc\tutorial\rt3d\rlimsorp

06/26/02  05:07p        <DIR>          .
06/26/02  05:07p        <DIR>          ..
11/04/99  05:26p                    79 othersol.dss
11/04/99  04:14p                     9 othersol.rts
11/04/99  05:24p                93,981 othersol001.con
11/04/99  05:26p                93,981 othersol002.con
11/04/99  05:26p                93,981 othersol003.con
06/26/02  05:07p        <DIR>          sample
04/03/98  12:07p                 1,194 site.map
               9 File(s)        283,225 bytes

 Directory of E:\Gms\pc\tutorial\rt3d\rlimsorp\sample

06/26/02  05:07p        <DIR>          .
06/26/02  05:07p        <DIR>          ..
01/24/00  05:19p                23,110 flowmod.bas
01/24/00  05:19p                   186 flowmod.bcf
01/24/00  05:19p                 5,060 flowmod.hed
01/24/00  05:19p                16,651 flowmod.hff
01/24/00  05:19p                   159 flowmod.lyr
01/24/00  05:19p                   549 flowmod.mfs
01/24/00  05:19p                   126 flowmod.oc
01/24/00  05:19p                   104 flowmod.pcg
01/24/00  05:19p                   286 flowmod.wel
01/24/00  05:19p                20,208 flowmod40.ccf
01/24/00  05:19p                    78 retard.adv
01/24/00  05:19p                38,889 retard.btn
01/24/00  05:19p                   208 retard.dsp
01/24/00  05:19p                   189 retard.dss
01/24/00  05:19p                   256 retard.rct
01/24/00  05:19p                   517 retard.rts
```

22/93

```
01/24/00  05:19p                  254 retard.ssm
01/24/00  05:19p              150,672 retard001.con
01/24/00  05:19p              150,672 retard002.con
             21 File(s)       408,174 bytes

 Directory of E:\Gms\pc\tutorial\rt3d\rxnpkgs

06/26/02  05:07p        <DIR>          .
06/26/02  05:07p        <DIR>          ..
10/29/98  11:36a                3,300 DUALPORE.F
10/29/98  05:04p               19,321 DUALPORE.PDF
10/29/98  03:17p                3,387 NAPL.F
10/29/98  05:04p               39,934 NAPL.PDF
11/03/98  03:59p                9,586 README.PDF
01/06/99  06:05p               10,267 RXN3.F
10/29/98  03:18p                4,156 RXN4.F
10/29/98  03:18p                6,361 RXN5.F
10/29/98  03:18p                4,332 RXN6.F
10/29/98  03:19p                5,085 RXN7.F
10/29/98  03:54p                3,378 RXN_EG2A.F
10/29/98  03:55p                3,547 RXN_EG2B.F
             14 File(s)       112,654 bytes

 Directory of E:\Gms\pc\tutorial\rt3d\userdef

06/26/02  05:07p        <DIR>          .
06/26/02  05:07p        <DIR>          ..
06/23/98  12:41p                8,384 rxns_1.dll
06/23/98  12:41p                  387 rxns_1.exp
06/23/98  12:37p                2,663 rxns_1.f
06/23/98  12:41p                2,566 rxns_1.lib
06/23/98  12:47p                1,954 rxns_1.obj
06/23/98  12:41p                  185 rxns_1.rsp
06/23/98  12:41p                8,384 rxns_2.dll
06/23/98  12:41p                  387 rxns_2.exp
06/23/98  12:37p                2,845 rxns_2.f
06/23/98  12:41p                2,566 rxns_2.lib
06/23/98  12:47p                2,073 rxns_2.obj
06/23/98  12:41p                  185 rxns_2.rsp
06/26/02  05:07p        <DIR>          sample
             15 File(s)        32,579 bytes

 Directory of E:\Gms\pc\tutorial\rt3d\userdef\sample

06/26/02  05:07p        <DIR>          .
06/26/02  05:07p        <DIR>          ..
01/24/00  05:19p                  302 rtmod1.rct
01/24/00  05:19p                  484 rtmod1.rts
01/24/00  05:19p                  130 rtmod1.ssm
01/24/00  05:19p              126,972 rtmod1001.con
01/24/00  05:19p              126,972 rtmod1002.con
01/24/00  05:19p              126,972 rtmod1003.con
01/24/00  05:19p              126,972 rtmod1004.con
01/24/00  05:19p                   34 rtmod2.adv
01/24/00  05:19p                  904 rtmod2.btn
01/24/00  05:19p                  208 rtmod2.dsp
01/24/00  05:19p                  371 rtmod2.dss
```

23/93

```
01/24/00  05:19p                  526 rtmod2.rct
01/24/00  05:19p                  641 rtmod2.rts
01/24/00  05:19p                  130 rtmod2.ssm
01/24/00  05:19p              126,972 rtmod2001.con
01/24/00  05:19p              126,972 rtmod2002.con
01/24/00  05:19p              126,972 rtmod2003.con
01/24/00  05:20p              126,972 rtmod2004.con
              20 File(s)    1,019,506 bytes

 Directory of E:\Gms\pc\tutorial\s2con

06/26/02  05:07p        <DIR>          .
06/26/02  05:07p        <DIR>          ..
06/26/02  05:07p        <DIR>          sample
               3 File(s)              0 bytes

 Directory of E:\Gms\pc\tutorial\s2con\sample

06/26/02  05:07p        <DIR>          .
06/26/02  05:07p        <DIR>          ..
11/08/99  10:46a               36,201 sample.geo
10/12/99  05:46p                   48 sample.gpr
10/12/99  05:15p               49,334 sample.ini
11/08/99  10:46a               87,046 sample.out
11/03/99  04:40p               26,555 sample.s2d
11/06/99  01:43p                   94 sample.sps
11/08/99  10:46a               12,804 sample.ssl
               9 File(s)       212,082 bytes

 Directory of E:\Gms\pc\tutorial\s2unc

06/26/02  05:07p        <DIR>          .
06/26/02  05:07p        <DIR>          ..
06/26/02  05:07p        <DIR>          sample
               3 File(s)              0 bytes

 Directory of E:\Gms\pc\tutorial\s2unc\sample

06/26/02  05:07p        <DIR>          .
06/26/02  05:07p        <DIR>          ..
11/19/99  11:41a                   91 sample.gpr
11/05/99  05:03p               49,652 sample.ini
09/08/99  04:40p               11,935 sample.map
11/05/99  05:03p                  114 sample.mat
11/08/99  10:48a               68,360 sample1.geo
11/08/99  10:48a              249,502 sample1.out
11/03/99  05:47p               68,019 sample1.s2d
11/05/99  05:00p                   98 sample1.sps
11/08/99  10:48a               18,916 sample1.ssl
11/08/99  01:13p              243,270 sample2.out
11/05/99  05:03p               68,079 sample2.s2d
11/05/99  05:03p                   78 sample2.sps
11/08/99  01:13p               22,980 sample2.ssl
              15 File(s)       801,094 bytes

 Directory of E:\Gms\pc\tutorial\seam3d
```

24/53

```
06/26/02  05:07p        <DIR>          .
06/26/02  05:07p        <DIR>          ..
09/12/00  03:27p                20,452 flowmod.bas
09/12/00  03:27p                   281 flowmod.bcf
09/12/00  03:27p                 1,102 flowmod.drn
09/12/00  03:27p                 3,260 flowmod.hed
09/12/00  03:27p                10,867 flowmod.hff
09/12/00  03:27p                   282 flowmod.lyr
09/12/00  03:27p                   235 flowmod.mfn
09/12/00  03:27p                   366 flowmod.mfs
09/12/00  03:27p                   126 flowmod.oc
09/12/00  03:27p                   109 flowmod.pcg
09/12/00  03:27p                13,008 flowmod40.ccf
06/26/02  05:07p        <DIR>          sample
              14 File(s)         50,088 bytes

 Directory of E:\Gms\pc\tutorial\seam3d\sample

06/26/02  05:07p        <DIR>          .
06/26/02  05:07p        <DIR>          ..
09/03/99  04:06p                   128 run1.adv
09/03/99  04:06p                 1,085 run1.bio
09/03/99  04:06p                 1,162 run1.btn
09/03/99  04:06p                   208 run1.dsp
09/03/99  04:14p                   630 run1.dss
09/03/99  04:06p                 1,036 run1.npl
09/03/99  04:06p                   822 run1.rct
09/03/99  04:06p                   674 run1.sms
09/03/99  04:06p                 2,478 run1.ssm
09/03/99  04:14p               128,852 run1001.con
09/03/99  04:14p               128,852 run1002.con
09/03/99  04:14p               128,852 run1003.con
09/03/99  04:14p               128,852 run1004.con
09/03/99  04:14p               128,852 run1005.con
09/03/99  04:14p               128,852 run1006.con
09/03/99  04:14p               128,852 run1007.con
              18 File(s)        910,187 bytes

 Directory of E:\Gms\pc\tutorial\solids

06/26/02  05:07p        <DIR>          .
06/26/02  05:07p        <DIR>          ..
09/02/99  09:36a                 3,371 holes.bor
09/01/99  05:44p                    65 holes.gpr
09/01/99  05:44p                49,894 holes.ini
09/01/99  05:44p                   194 holes.mat
               6 File(s)         53,524 bytes

 Directory of E:\Gms\pc\tutorial\tins

06/26/02  05:07p        <DIR>          .
06/26/02  05:07p        <DIR>          ..
11/04/97  01:39p                 1,141 sparse.tin
11/04/97  01:39p                78,216 surface.tin
11/04/97  01:39p                17,128 verts.tin
               5 File(s)         96,485 bytes
```

25/93

```
 Directory of E:\Gms\pc\tutorial\trans

06/26/02  05:07p        <DIR>          .
06/26/02  05:07p        <DIR>          ..
06/19/00  07:55a                 2,411 obswells.map
05/31/00  02:07p                   409 pumping.wpf
06/19/00  07:54a               155,660 start.bas
06/19/00  07:54a               289,809 start.bcf
06/19/00  08:02a                   105 start.gpr
06/16/00  10:54a                24,700 start.hed
06/16/00  10:54a               129,351 start.hff
06/19/00  07:54a                45,065 start.ini
06/19/00  07:54a               430,374 start.lyr
06/19/00  07:54a                34,781 start.map
06/19/00  07:54a                   261 start.mfn
06/19/00  07:54a                   418 start.mfs
06/19/00  07:54a                   126 start.oc
06/19/00  07:54a                   109 start.pcg
06/19/00  07:54a               142,965 start.rch
06/19/00  07:54a                16,850 start.riv
06/19/00  07:54a                   105 start.wel
06/19/00  07:54a                    28 start3g.dat
06/16/00  10:54a               148,152 start40.ccf
06/19/00  07:54a                    28 startmf.dat
06/16/00  05:08p                 5,772 trans_obs.tof
06/16/00  04:41p                   547 zone2.xys
06/16/00  04:41p                   547 zone3.xys
06/16/00  04:41p                   547 zone4.xys
              26 File(s)      1,429,120 bytes

 Directory of E:\Gms\pc\tutorial\utchem

06/26/02  05:07p        <DIR>          .
06/26/02  05:07p        <DIR>          ..
06/26/02  05:07p        <DIR>          sample
               3 File(s)              0 bytes

 Directory of E:\Gms\pc\tutorial\utchem\sample

06/26/02  05:07p        <DIR>          .
06/26/02  05:07p        <DIR>          ..
10/02/00  02:25p                66,440 contamination_water.dat
10/02/00  02:25p                66,440 contamination_calcium.dat
10/02/00  02:25p                66,440 contamination_chloride.dat
10/02/00  02:25p                66,440 contamination_PCE.dat
10/02/00  02:25p                66,440 contamination_p001.dat
10/02/00  02:25p                66,440 contamination_p002.dat
10/02/00  02:25p               471,181 contamination.concp
10/02/00  02:25p                66,440 contamination_s001.dat
10/02/00  02:24p                   304 contamination.dss
10/02/00  02:25p               468,006 contamination.echo
10/02/00  02:24p                   102 contamination.hdd
10/02/00  02:25p                   976 contamination.HIST01
10/02/00  02:24p                   917 contamination.mesh
10/02/00  02:25p                 2,136 contamination.overal
10/02/00  02:24p                33,038 contamination.perm
10/02/00  02:25p               355,597 contamination.presp
```

26/93

```
10/02/00  02:25p                7,554 contamination.prof
10/02/00  02:25p              629,380 contamination.restar
10/02/00  02:25p              350,557 contamination.satp
10/02/00  02:25p                  554 contamination.ttable
10/02/00  02:24p              192,426 contamination.utc
10/02/00  02:24p                   66 contamination.uts
10/02/00  02:24p                    0 contamination.warn
10/02/00  02:25p               66,440 contamination_p003.dat
10/02/00  02:25p               66,440 contamination_s002.dat
10/02/00  02:25p               66,440 contamination_s003.dat
10/02/00  02:47p              377,960 treatment_chloride.dat
10/02/00  02:47p              377,960 treatment_water.dat
10/02/00  02:47p              377,960 treatment_s003.dat
10/02/00  02:47p              377,960 treatment_s002.dat
10/02/00  02:47p              377,960 treatment_p001.dat
10/02/00  02:47p            2,690,926 treatment.concp
10/02/00  02:47p              377,960 treatment_PCE.dat
10/02/00  02:37p                  264 treatment.dss
10/02/00  02:47p              482,349 treatment.echo
10/02/00  02:37p                  102 treatment.hdd
10/02/00  02:47p               95,906 treatment.HIST03
10/02/00  02:37p                1,040 treatment.mesh
10/02/00  02:47p               36,498 treatment.overal
10/02/00  02:37p               33,038 treatment.perm
10/02/00  02:47p            2,030,446 treatment.presp
10/02/00  02:47p              278,246 treatment.prof
10/02/00  02:47p              634,192 treatment.restar
10/02/00  02:47p            2,001,646 treatment.satp
10/02/00  02:47p                7,126 treatment.ttable
10/02/00  02:37p              195,086 treatment.utc
10/02/00  02:37p                   66 treatment.uts
10/02/00  02:47p            1,883,508 treatment.warn
10/02/00  02:47p              377,960 treatment_p002.dat
10/02/00  02:47p               54,118 treatment.HIST04
10/02/00  02:47p              377,960 treatment_s001.dat
10/02/00  02:47p               54,118 treatment.HIST02
10/02/00  02:47p              377,960 treatment_p003.dat
10/02/00  02:47p               10,774 treatment.HIST01
10/02/00  02:47p              377,960 treatment_calcium.dat
              57 File(s)     17,446,243 bytes

 Directory of E:\SMS

06/26/02  05:05p        <DIR>          .
06/26/02  05:05p        <DIR>          ..
06/26/02  05:06p        <DIR>          pc
               3 File(s)              0 bytes

 Directory of E:\SMS\pc

06/26/02  05:06p        <DIR>          .
06/26/02  05:06p        <DIR>          ..
12/07/00  10:20a                   90 DATA.TAG
12/07/00  10:21a               37,584 data1.cab
06/26/02  05:05p        <DIR>          docs
05/30/97  11:31a                4,557 lang.dat
06/26/02  05:05p        <DIR>          latlon
```

27/93

```
12/07/00  10:21a                    353 layout.bin
06/26/02  05:06p        <DIR>           models
05/06/97  02:15p                    417 os.dat
06/26/02  05:06p        <DIR>           program
01/15/97  09:22a                 26,078 setup.bmp
12/17/97  06:30p                 59,904 SETUP.EXE
12/07/00  10:20a                     72 SETUP.INI
12/07/00  10:20a                 60,578 setup.ins
12/07/00  10:21a                     49 setup.lid
06/26/02  05:06p        <DIR>           tutorial
12/17/97  06:47p                290,586 _INST32I.EX_
12/17/97  06:30p                  8,192 _ISDEL.EXE
12/17/97  06:29p                 11,264 _SETUP.DLL
12/07/00  10:20a                208,590 _sys1.cab
12/07/00  10:20a                 51,289 _user1.cab
              22 File(s)        759,603 bytes

 Directory of E:\SMS\pc\docs

06/26/02  05:05p        <DIR>           .
06/26/02  05:05p        <DIR>           ..
01/19/99  08:12a                272,888 gfgen.pdf
08/13/98  09:51a                212,268 hivel20.pdf
01/19/99  08:14a              1,552,653 rma2.pdf
01/02/96  12:03p                  6,499 rma4help.txt
01/19/99  08:14a                193,279 sed2d.pdf
01/18/00  08:21a                837,877 stwavedoc.pdf
08/07/00  12:01p              4,044,150 tutorial70.pdf
06/09/98  02:08p              1,572,222 wspro.pdf
              10 File(s)      8,691,836 bytes

 Directory of E:\SMS\pc\latlon

06/26/02  05:05p        <DIR>           .
06/26/02  05:05p        <DIR>           ..
08/12/99  12:31p                530,000 alaska.las
08/12/99  12:31p                530,000 alaska.los
07/07/99  02:18p                  2,704 alhpgn.las
07/07/99  02:18p                  2,704 alhpgn.los
07/07/99  02:19p                  4,624 azhpgn.las
07/07/99  02:19p                  4,624 azhpgn.los
07/07/99  02:19p                  5,520 cnhpgn.las
07/07/99  02:19p                  5,520 cnhpgn.los
07/07/99  02:19p                  3,952 cohpgn.las
07/07/99  02:19p                  3,952 cohpgn.los
08/12/99  12:31p                133,712 conus.las
08/12/99  12:31p                133,712 conus.los
07/07/99  02:19p                  3,344 cshpgn.las
07/07/99  02:19p                  3,344 cshpgn.los
07/07/99  02:19p                  6,384 emhpgn.las
07/07/99  02:19p                  6,384 emhpgn.los
07/07/99  02:19p                  8,568 ethpgn.las
07/07/99  02:19p                  8,568 ethpgn.los
07/07/99  02:19p                  4,624 flhpgn.las
07/07/99  02:19p                  4,624 flhpgn.los
07/07/99  02:19p                  2,704 gahpgn.las
07/07/99  02:19p                  2,704 gahpgn.los
```

28/53

08/12/99	12:31p	227,856	hawaii.las
08/12/99	12:31p	227,856	hawaii.los
07/07/99	02:20p	3,536	hihpgn.las
07/07/99	02:20p	3,536	hihpgn.los
07/07/99	02:20p	3,344	kshpgn.las
07/07/99	02:20p	3,344	kshpgn.los
07/07/99	02:20p	2,736	kyhpgn.las
07/07/99	02:20p	2,736	kyhpgn.los
07/07/99	02:20p	3,600	lahpgn.las
07/07/99	02:20p	3,600	lahpgn.los
07/07/99	02:20p	1,872	mdhpgn.las
07/07/99	02:20p	1,872	mdhpgn.los
07/07/99	02:20p	2,704	mehpgn.las
07/07/99	02:20p	2,704	mehpgn.los
07/07/99	02:20p	4,560	mihpgn.las
07/07/99	02:20p	4,560	mihpgn.los
07/07/99	02:21p	3,120	mshpgn.las
07/07/99	02:21p	3,120	mshpgn.los
08/17/99	10:03a	57,888	nad27sp
08/17/99	10:03a	57,888	nad83sp
07/07/99	02:21p	3,024	nbhpgn.las
07/07/99	02:21p	3,024	nbhpgn.los
07/07/99	02:21p	3,696	ndhpgn.las
07/07/99	02:21p	3,696	ndhpgn.los
07/07/99	02:22p	2,704	nehpgn.las
07/07/99	02:22p	2,704	nehpgn.los
07/07/99	02:22p	4,560	nmhpgn.las
07/07/99	02:22p	4,560	nmhpgn.los
07/07/99	02:22p	4,080	nvhpgn.las
07/07/99	02:22p	4,080	nvhpgn.los
12/07/99	02:16p	4,784	nyhpgn.las
12/07/99	02:17p	4,784	nyhpgn.los
07/07/99	02:22p	2,288	ohhpgn.las
07/07/99	02:22p	2,288	ohhpgn.los
07/07/99	02:22p	3,696	okhpgn.las
07/07/99	02:22p	3,696	okhpgn.los
08/12/99	12:31p	13,776	prvi.las
08/12/99	12:31p	13,776	prvi.los
07/07/99	02:22p	1,664	pvhpgn.las
07/07/99	02:23p	1,664	pvhpgn.los
07/07/99	02:23p	4,368	sdhpgn.las
07/07/99	02:23p	4,368	sdhpgn.los
08/12/99	12:31p	30,256	stgeorge.las
08/12/99	12:31p	30,256	stgeorge.los
08/12/99	12:31p	13,776	stlrnc.las
08/12/99	12:31p	13,776	stlrnc.los
08/12/99	12:31p	3,696	stpaul.las
08/12/99	12:31p	3,696	stpaul.los
07/07/99	02:23p	2,352	tnhpgn.las
07/07/99	02:23p	2,352	tnhpgn.los
07/07/99	02:23p	4,080	uthpgn.las
07/07/99	02:23p	4,080	uthpgn.los
07/07/99	02:24p	2,736	vahpgn.las
07/07/99	02:24p	2,736	vahpgn.los
08/16/99	11:18a	964,656	vertconc.94
08/16/99	11:18a	964,656	vertcone.94
08/16/99	11:18a	964,656	vertconw.94

29/93

```
07/07/99  02:24p                 3,536 wihpgn.las
07/07/99  02:24p                 3,536 wihpgn.los
07/07/99  02:24p                 6,384 wmhpgn.las
07/07/99  02:24p                 6,384 wmhpgn.los
07/07/99  02:24p                 5,776 wohpgn.las
07/07/99  02:24p                 5,776 wohpgn.los
07/07/99  02:24p                 6,800 wthpgn.las
07/07/99  02:24p                 6,800 wthpgn.los
07/07/99  02:24p                 2,728 wvhpgn.las
07/07/99  02:25p                 2,728 wvhpgn.los
07/07/99  02:25p                 2,992 wyhpgn.las
07/07/99  02:25p                 2,992 wyhpgn.los
              93 File(s)      5,196,176 bytes

 Directory of E:\SMS\pc\models

06/26/02  05:06p        <DIR>          .
06/26/02  05:06p        <DIR>          ..
09/20/00  01:04p             2,207,823 adcirc.exe
01/12/99  04:32p             2,557,440 ASC2BIN.EXE
01/12/99  04:30p             2,552,832 BIN2ASC.EXE
01/10/94  10:00p               393,942 dosxmsf.exe
01/10/94  10:00p                 9,343 dosxnt.386
01/10/94  10:00p               393,942 dosxnt.exe
10/07/98  04:35p               733,184 flo2dh.exe
08/09/99  01:16p             3,809,280 gfgv435.exe
10/05/98  01:15p               168,912 gfgv435.f
10/07/98  04:45p                 2,104 gfgv435.inc
10/13/98  01:09p               324,096 hivel201.exe
02/05/99  11:00a               523,410 r2v435.f
04/01/99  08:55a                 6,344 r2v435.inc
05/15/00  03:38p               733,184 r4v431.exe
10/05/98  03:42p               250,614 r4v431.f
10/07/98  04:41p                 4,051 r4v431.inc
10/05/99  08:25a            10,076,160 rma2v435.exe
05/17/00  10:32a             1,556,480 sed2dv32.exe
05/15/00  03:38p               416,804 stwave.exe
11/24/97  01:35p               532,480 wspro.exe
              22 File(s)     27,252,425 bytes

 Directory of E:\SMS\pc\program

06/26/02  05:06p        <DIR>          .
06/26/02  05:06p        <DIR>          ..
03/14/95  01:57p                19,968 check32.dll
09/26/95  09:35p               764,693 gfgen.hlp
06/04/97  07:23a                57,654 hivel2d.hlp
03/27/97  05:20a               118,272 nslms324.dll
07/06/00  04:25p                 5,545 readme.txt
09/26/95  09:35p               633,318 rma.hlp
07/11/00  08:30a                 3,310 sms.ico
09/18/00  10:02a             2,702,799 SMS70.chm
12/01/00  08:22a             6,582,272 sms70.exe
              11 File(s)     10,887,831 bytes

 Directory of E:\SMS\pc\tutorial
```

30/93

```
06/26/02  05:06p        <DIR>          .
06/26/02  05:06p        <DIR>          ..
06/26/02  05:06p        <DIR>          shoaltut3
06/26/02  05:06p        <DIR>          shoaltut1_2
06/26/02  05:06p        <DIR>          shoaltut6
06/26/02  05:06p        <DIR>          shoaltut5
06/26/02  05:06p        <DIR>          shoaltut4
06/26/02  05:06p        <DIR>          tut10
06/26/02  05:06p        <DIR>          tut11
06/26/02  05:06p        <DIR>          tut12
06/26/02  05:06p        <DIR>          tut13
06/26/02  05:06p        <DIR>          tut14
06/26/02  05:06p        <DIR>          tut15
06/26/02  05:06p        <DIR>          tut16
06/26/02  05:06p        <DIR>          tut17
06/26/02  05:06p        <DIR>          tut18
06/26/02  05:06p        <DIR>          tut2
06/26/02  05:06p        <DIR>          tut3
06/26/02  05:06p        <DIR>          tut4
06/26/02  05:06p        <DIR>          tut5
06/26/02  05:06p        <DIR>          tut6
06/26/02  05:06p        <DIR>          tut7
06/26/02  05:06p        <DIR>          tut8
06/26/02  05:06p        <DIR>          tut9
              24 File(s)              0 bytes

 Directory of E:\SMS\pc\tutorial\shoaltut3

06/26/02  05:06p        <DIR>          .
06/26/02  05:06p        <DIR>          ..
09/28/99  08:39a                   72 shin.tfw
09/24/99  05:23p            5,622,174 shin.tif
10/13/99  03:42p              780,019 shin97.pts
10/21/99  04:57p              845,065 shin98.pts
               6 File(s)    7,247,330 bytes

 Directory of E:\SMS\pc\tutorial\shoaltut1_2

06/26/02  05:06p        <DIR>          .
06/26/02  05:06p        <DIR>          ..
10/01/99  04:41p                1,159 shoal1.met
10/01/99  03:32p              263,331 shoal1.pts
               4 File(s)      264,490 bytes

 Directory of E:\SMS\pc\tutorial\shoaltut6

06/26/02  05:06p        <DIR>          .
06/26/02  05:06p        <DIR>          ..
10/13/99  01:16p               14,539 dredge.prf
10/12/99  03:30p                9,063 profile.prf
10/14/99  03:06p              446,875 profile.pts
               5 File(s)      470,477 bytes

 Directory of E:\SMS\pc\tutorial\shoaltut5

06/26/02  05:06p        <DIR>          .
06/26/02  05:06p        <DIR>          ..
```

31/53

```
10/13/99  03:43p                290,261 beach.pts
               3 File(s)        290,261 bytes

 Directory of E:\SMS\pc\tutorial\shoaltut4

06/26/02  05:06p        <DIR>           .
06/26/02  05:06p        <DIR>           ..
10/14/99  10:18a                414,376 nov95.pts
10/14/99  10:16a                463,363 oct95.pts
               4 File(s)        877,739 bytes

 Directory of E:\SMS\pc\tutorial\tut10

06/26/02  05:06p        <DIR>           .
06/26/02  05:06p        <DIR>           ..
05/26/00  02:49p                    787 madora.bc
05/26/00  01:32p                 98,348 madora.bin
05/26/00  02:49p                 96,680 madora.geo
05/26/00  02:49p                    192 madora.mat
05/26/00  02:49p                     55 madora.sim
05/26/00  01:32p                 48,492 madora.sol
05/26/00  02:50p                    170 madora.spr
05/26/00  02:49p                     75 madora_gf.run
05/26/00  02:49p                     99 madora_rm.run
05/31/00  01:38p                  3,044 noyo1.bc
05/25/00  04:25p                 34,796 noyo1.bin
05/31/00  01:38p                 30,591 noyo1.geo
05/31/00  01:38p                    164 noyo1.mat
05/31/00  01:38p                     53 noyo1.sim
05/25/00  04:26p                672,872 noyo1.sol
05/31/00  01:39p                    166 noyo1.spr
05/31/00  01:38p                     72 noyo1_gf.run
05/31/00  01:38p                     95 noyo1_rm.run
06/02/00  01:15p                  3,044 noyo2.bc
05/25/00  04:25p                 34,796 noyo2.bin
06/02/00  01:15p                 30,591 noyo2.geo
06/02/00  01:15p                    170 noyo2.mat
06/02/00  01:15p                     75 noyo2.sim
05/25/00  04:26p                672,872 noyo2.sol
06/02/00  01:16p                    166 noyo2.spr
06/02/00  01:15p                  2,236 noyo2.trn
06/02/00  01:15p                     72 noyo2_gf.run
06/02/00  01:15p                    120 noyo2_r4.run
06/02/00  01:15p                     95 noyo2_rm.run
06/26/02  05:06p        <DIR>           output
              32 File(s)      1,730,988 bytes

 Directory of E:\SMS\pc\tutorial\tut10\output

06/26/02  05:06p        <DIR>           .
06/26/02  05:06p        <DIR>           ..
05/26/00  03:35p                    787 madora.bc
05/26/00  01:32p                 98,348 madora.bin
05/26/00  03:35p                 96,680 madora.geo
05/26/00  03:35p                    192 madora.mat
05/26/00  04:06p                517,556 madora.qsl
06/02/00  01:46p                     75 madora.sim
```

32/93

```
05/26/00  01:32p                48,492 madora.sol
06/02/00  01:47p                   170 madora.spr
05/26/00  04:03p                 2,277 madora.trn
06/02/00  01:46p                    75 madora_gf.run
06/02/00  01:46p                   125 madora_r4.run
06/02/00  01:46p                    99 madora_rm.run
06/02/00  01:03p                 3,044 noyo1.bc
05/25/00  04:25p                34,796 noyo1.bin
06/02/00  01:03p                30,591 noyo1.geo
06/02/00  01:03p                   164 noyo1.mat
06/02/00  01:05p               167,924 noyo1.qsl
06/02/00  01:47p                    75 noyo1.sim
05/25/00  04:26p               672,872 noyo1.sol
06/02/00  01:47p                   166 noyo1.spr
06/02/00  01:03p                 2,271 noyo1.trn
06/02/00  01:47p                    72 noyo1_gf.run
06/02/00  01:47p                   120 noyo1_r4.run
06/02/00  01:48p                    95 noyo1_rm.run
06/02/00  01:29p                 3,044 noyo2.bc
05/25/00  04:25p                34,796 noyo2.bin
06/02/00  01:29p                30,591 noyo2.geo
06/02/00  01:29p                   170 noyo2.mat
06/02/00  01:31p               167,924 noyo2.qsl
06/02/00  01:48p                    75 noyo2.sim
05/25/00  04:26p               672,872 noyo2.sol
06/02/00  01:49p                   195 noyo2.spr
06/02/00  01:29p                 2,282 noyo2.trn
06/02/00  01:49p                    72 noyo2_gf.run
06/02/00  01:49p                   120 noyo2_r4.run
06/02/00  01:49p                    95 noyo2_rm.run
              38 File(s)      2,589,302 bytes

 Directory of E:\SMS\pc\tutorial\tut11

06/26/02  05:06p        <DIR>          .
06/26/02  05:06p        <DIR>          ..
06/26/02  05:06p        <DIR>          output
05/24/00  03:34p                59,232 proto.geo
05/25/00  01:18p                    16 proto.sup
               5 File(s)         59,248 bytes

 Directory of E:\SMS\pc\tutorial\tut11\output

06/26/02  05:06p        <DIR>          .
06/26/02  05:06p        <DIR>          ..
05/25/00  03:11p                72,674 hivel.hot
05/25/00  03:07p                   265 proto_h.flo
05/25/00  03:07p                59,232 proto_h.geo
05/25/00  03:07p                    85 proto_h.mat
05/25/00  03:08p                   148 proto_h.spr
05/25/00  03:07p                   104 proto_h.sup
05/25/00  03:07p                17,098 proto_h-_-3-0.dat
05/25/00  03:11p                20,194 proto_hflo.dat
05/25/00  03:11p                10,923 proto_hwse.dat
              11 File(s)        180,723 bytes

 Directory of E:\SMS\pc\tutorial\tut12
```

```
06/26/02  05:06p        <DIR>          .
06/26/02  05:06p        <DIR>          ..
05/24/00  10:18a               184,996 indiana.xyz
06/26/02  05:06p        <DIR>          output
               4 File(s)        184,996 bytes

 Directory of E:\SMS\pc\tutorial\tut12\output

06/26/02  05:06p        <DIR>          .
06/26/02  05:06p        <DIR>          ..
05/25/00  11:30a                13,600 1d.out
05/25/00  11:24a                 3,169 indianaout.cg1
05/25/00  11:25a               181,756 indianaout.cgi
05/25/00  11:10a                53,221 indianaout.cgo
05/25/00  08:24a               416,148 indianaout-_-5-26500.dat
05/25/00  08:24a                 9,145 indianaout.map
05/25/00  08:24a                    81 indianaout.mat
05/25/00  11:26a                   233 indianaout.spr
05/25/00  08:24a               385,431 indianaout.xy
              11 File(s)      1,062,784 bytes

 Directory of E:\SMS\pc\tutorial\tut13

06/26/02  05:06p        <DIR>          .
06/26/02  05:06p        <DIR>          ..
06/26/02  05:06p        <DIR>          output
05/08/00  10:56a                 6,335 shin.cst
05/12/00  02:51p               700,336 shin.pts
               5 File(s)        706,671 bytes

 Directory of E:\SMS\pc\tutorial\tut13\output

06/26/02  05:06p        <DIR>          .
06/26/02  05:06p        <DIR>          ..
05/24/00  02:44p               617,380 fort.14
05/24/00  02:45p                13,096 fort.15
05/24/00  02:49p               112,562 fort.16
05/24/00  02:54p             5,834,371 fort.63
05/24/00  02:54p             9,253,615 fort.64
05/25/00  09:37a                13,096 shinfinal.ctl
05/24/00  02:44p             2,825,233 shinfinal-_-5-26500.dat
05/24/00  02:44p               617,380 shinfinal.grd
05/24/00  02:44p                20,619 shinfinal.map
05/24/00  02:44p                    81 shinfinal.mat
05/25/00  09:39a                   254 shinfinal.spr
05/24/00  02:44p             1,609,508 shinfinal.xy
              14 File(s)     20,917,195 bytes

 Directory of E:\SMS\pc\tutorial\tut14

06/26/02  05:06p        <DIR>          .
06/26/02  05:06p        <DIR>          ..
05/24/00  02:54p             9,253,615 fort.64
06/26/02  05:06p        <DIR>          output
05/24/00  02:44p               617,380 shinfinal.grd
               5 File(s)      9,870,995 bytes
```

34/93

```
 Directory of E:\SMS\pc\tutorial\tut14\output

06/26/02  05:06p        <DIR>          .
06/26/02  05:06p        <DIR>          ..
05/24/00  03:57p                   108 selhts.out
05/24/00  03:52p               741,719 shin.cur
05/24/00  03:52p                80,684 shin.dep
05/24/00  03:52p                16,181 shin.eng
05/24/00  03:51p                26,451 shin.map
05/24/00  03:52p                    85 shin.mat
05/24/00  03:57p                35,043 shin.obs
05/24/00  03:52p                   173 shin.sim
05/24/00  03:52p                   236 shin.spr
05/24/00  03:52p                    30 shin.std
05/24/00  03:58p                92,933 shin.wav
05/24/00  03:51p               365,032 shin.xy
05/24/00  03:52p             1,035,564 shin-_-10-0.dat
05/24/00  03:52p             6,905,427 shin-_-5-15708.dat
              16 File(s)      9,299,666 bytes

 Directory of E:\SMS\pc\tutorial\tut15

06/26/02  05:06p        <DIR>          .
06/26/02  05:06p        <DIR>          ..
06/26/02  05:06p        <DIR>          output
01/29/99  01:00p                   392 xsec.dat
               4 File(s)            392 bytes

 Directory of E:\SMS\pc\tutorial\tut15\output

06/26/02  05:06p        <DIR>          .
06/26/02  05:06p        <DIR>          ..
06/15/00  11:57a                 1,447 basic.dat
06/15/00  11:58a                17,297 basic.LST
06/15/00  11:58a                   502 basic.PLT
06/15/00  12:09p                 1,626 wp_br1.dat
06/15/00  12:10p                24,893 wp_br1.LST
06/15/00  12:10p                   812 wp_br1.PLT
06/15/00  12:35p                 1,626 wp_br2.dat
               9 File(s)         48,203 bytes

 Directory of E:\SMS\pc\tutorial\tut16

06/26/02  05:06p        <DIR>          .
06/26/02  05:06p        <DIR>          ..
04/25/00  10:38a               463,042 redfox.2dm
06/16/00  03:33p                   197 redfox.img
04/25/00  10:38a                19,781 redfox.ini
04/25/00  10:38a                22,004 redfox.map
04/25/00  10:38a                   207 redfox.mat
04/25/00  10:38a                   229 redfox.spr
11/10/98  03:20p                    87 redfox.sup
03/19/98  12:48p               271,084 redfox.tif
11/10/98  03:14p                19,456 registerpts.doc
              11 File(s)        796,087 bytes
```

35/53

```
 Directory of E:\SMS\pc\tutorial\tut17

06/26/02  05:06p        <DIR>          .
06/26/02  05:06p        <DIR>          ..
06/13/00  08:03a                   978 observe1.dat
06/09/00  12:48p               232,019 observe1.flo
06/13/00  08:03a                   204 observe1.fpr
06/13/00  08:03a                    77 observe1.mat
06/13/00  08:03a               198,812 observe1.net
06/09/00  12:48p                 2,358 observe1.pro
06/13/00  08:03a                   182 observe1.spr
01/29/99  01:00p                   777 observpts.obt
06/26/02  05:06p        <DIR>          output
              11 File(s)        435,407 bytes

 Directory of E:\SMS\pc\tutorial\tut17\output

06/26/02  05:06p        <DIR>          .
06/26/02  05:06p        <DIR>          ..
06/13/00  08:06a               232,019 observe2.flo
06/13/00  08:08a               232,019 observe3.flo
               4 File(s)        464,038 bytes

 Directory of E:\SMS\pc\tutorial\tut18

06/26/02  05:06p        <DIR>          .
06/26/02  05:06p        <DIR>          ..
06/26/02  05:06p        <DIR>          feswms
06/26/02  05:06p        <DIR>          rma2
               4 File(s)              0 bytes

 Directory of E:\SMS\pc\tutorial\tut18\feswms

06/26/02  05:06p        <DIR>          .
06/26/02  05:06p        <DIR>          ..
06/14/00  09:00a                 1,040 flumea1.dat
06/14/00  09:00a                   195 flumea1.fpr
06/14/00  09:00a                   126 flumea1.mat
06/14/00  09:00a                20,114 flumea1.net
06/14/00  09:00a                   126 flumea1.spr
06/14/00  10:05a                   885 flumec1.dat
06/14/00  10:05a                   195 flumec1.fpr
06/14/00  10:05a                    85 flumec1.mat
06/14/00  10:05a                21,818 flumec1.net
06/14/00  10:06a                   132 flumec1.spr
06/14/00  10:21a                 1,125 flumee1.dat
06/14/00  10:21a                   195 flumee1.fpr
06/14/00  10:21a                   130 flumee1.mat
06/14/00  10:21a                75,882 flumee1.net
06/14/00  10:22a                   132 flumee1.spr
06/26/02  05:06p        <DIR>          output
              18 File(s)        122,180 bytes

 Directory of E:\SMS\pc\tutorial\tut18\feswms\output

06/26/02  05:06p        <DIR>          .
06/26/02  05:06p        <DIR>          ..
```

36/53

```
06/14/00  08:50a                24,076 flumea1.flo
06/14/00  09:46a                24,076 flumea2.flo
06/14/00  09:47a                24,076 flumea3.flo
06/14/00  09:48a                24,076 flumeb1.flo
06/14/00  09:48a                24,076 flumeb2.flo
06/14/00  09:49a                24,076 flumeb3.flo
06/14/00  10:05a                24,423 flumec1.flo
06/14/00  10:07a                24,423 flumec2.flo
06/14/00  10:07a                24,423 flumec3.flo
06/14/00  10:08a                24,423 flumed1.flo
06/14/00  10:08a                24,423 flumed2.flo
06/14/00  10:09a                24,423 flumed3.flo
06/14/00  10:22a                89,280 flumee1.flo
06/14/00  10:23a                89,280 flumee2.flo
06/14/00  10:23a                89,280 flumee3.flo
06/14/00  10:24a                89,280 flumee4.flo
              18 File(s)        648,114 bytes

 Directory of E:\SMS\pc\tutorial\tut18\rma2

06/26/02  05:06p        <DIR>           .
06/26/02  05:06p        <DIR>           ..
06/13/00  09:09a                    429 flumea1.bc
06/13/00  09:09a                 10,278 flumea1.geo
06/13/00  09:09a                     85 flumea1.mat
06/13/00  09:09a                     57 flumea1.sim
06/13/00  09:09a                    124 flumea1.spr
06/13/00  09:09a                     78 flumea1_gf.run
06/13/00  09:09a                    103 flumea1_rm.run
06/14/00  09:57a                    463 flumec1.bc
06/14/00  09:57a                 13,346 flumec1.geo
06/14/00  09:57a                     85 flumec1.mat
06/14/00  09:57a                     57 flumec1.sim
06/14/00  09:57a                    130 flumec1.spr
06/14/00  09:57a                     78 flumec1_gf.run
06/14/00  09:57a                    103 flumec1_rm.run
06/14/00  10:13a                    526 flumee1.bc
06/14/00  10:13a                 37,738 flumee1.geo
06/14/00  10:13a                    125 flumee1.mat
06/14/00  10:13a                     57 flumee1.sim
06/14/00  10:14a                    130 flumee1.spr
06/14/00  10:13a                     78 flumee1_gf.run
06/14/00  10:13a                    103 flumee1_rm.run
06/26/02  05:06p        <DIR>           output
              24 File(s)         64,173 bytes

 Directory of E:\SMS\pc\tutorial\tut18\rma2\output

06/26/02  05:06p        <DIR>           .
06/26/02  05:06p        <DIR>           ..
06/14/00  09:17a                 10,132 flumea1.sol
06/14/00  09:32a                 10,132 flumea2.sol
06/14/00  09:33a                 10,132 flumea3.sol
06/14/00  09:39a                 10,132 flumeb1.sol
06/14/00  09:41a                 10,132 flumeb2.sol
06/14/00  09:42a                 10,132 flumeb3.sol
06/14/00  09:57a                 11,492 flumec1.sol
```

37/53

```
06/14/00  09:59a                11,492 flumec2.sol
06/14/00  09:59a                11,492 flumec3.sol
06/14/00  10:01a                11,492 flumed1.sol
06/14/00  10:01a                11,492 flumed2.sol
06/14/00  10:02a                11,492 flumed3.sol
06/14/00  10:14a                22,412 flumee1.sol
06/14/00  10:18a                22,412 flumee2.sol
06/14/00  10:18a                22,412 flumee3.sol
06/14/00  10:19a                22,412 flumee4.sol
              18 File(s)        219,392 bytes

 Directory of E:\SMS\pc\tutorial\tut2

06/26/02  05:06p        <DIR>           .
06/26/02  05:06p        <DIR>           ..
06/26/02  05:06p        <DIR>           output
01/29/99  01:00p                    73 stmary.tfw
01/29/99  01:00p               688,022 stmary.tif
01/29/99  01:00p               395,674 stmary.xy
01/29/99  01:00p                15,475 stmary1.map
01/29/99  01:00p                12,698 stmary2.map
01/29/99  01:00p                15,230 stmary3.map
01/29/99  01:00p                31,673 stmaryscat2s.dat
01/29/99  01:00p                    57 stmaryscat.sup
01/29/99  01:00p               395,674 stmaryscat.xy
              12 File(s)      1,554,576 bytes

 Directory of E:\SMS\pc\tutorial\tut2\output

06/26/02  05:06p        <DIR>           .
06/26/02  05:06p        <DIR>           ..
05/23/00  09:35a                   701 stmaryout.bc
05/23/00  09:35a               152,851 stmaryout.geo
06/16/00  04:13p                   210 stmaryout.img
05/23/00  09:35a                16,779 stmaryout.map
05/23/00  09:35a                   215 stmaryout.mat
05/23/00  09:35a                    84 stmaryout_gf.run
05/23/00  09:35a                    61 stmaryout.sim
05/23/00  04:18p                   247 stmaryout.spr
05/23/00  09:35a               657,041 stmaryout.xy
05/23/00  09:35a                   111 stmaryout_rm.run
              12 File(s)        828,300 bytes

 Directory of E:\SMS\pc\tutorial\tut3

06/26/02  05:06p        <DIR>           .
06/26/02  05:06p        <DIR>           ..
01/29/99  01:00p                25,045 poway1.xyz
               3 File(s)         25,045 bytes

 Directory of E:\SMS\pc\tutorial\tut4

06/26/02  05:06p        <DIR>           .
06/26/02  05:06p        <DIR>           ..
06/26/02  05:06p        <DIR>           output
05/23/00  01:55p                   631 stmaryout.bc
05/23/00  01:55p               152,848 stmaryout.geo
```

38/53

```
05/23/00  01:55p                  172 stmaryout.mat
05/23/00  01:55p                   84 stmaryout_gf.run
05/23/00  01:55p                   61 stmaryout.sim
06/16/00  04:12p                  128 stmaryout.spr
05/23/00  01:55p                  111 stmaryout_rm.run
              10 File(s)        154,035 bytes

 Directory of E:\SMS\pc\tutorial\tut4\output

06/26/02  05:06p        <DIR>          .
06/26/02  05:06p        <DIR>          ..
05/23/00  01:58p                  277 r2sol.dat
05/23/00  01:58p                  631 stmary2.bc
05/23/00  01:58p              103,460 stmary2.bin
05/23/00  01:58p              152,848 stmary2.geo
05/23/00  01:58p                  172 stmary2.mat
05/23/00  01:58p                   57 stmary2.sim
05/23/00  01:58p               48,068 stmary2.sol
06/16/00  04:12p                  124 stmary2.spr
05/23/00  01:58p                   78 stmary2_gf.run
05/23/00  01:58p                  103 stmary2_rm.run
              12 File(s)        305,818 bytes

 Directory of E:\SMS\pc\tutorial\tut5

06/26/02  05:06p        <DIR>          .
06/26/02  05:06p        <DIR>          ..
06/26/02  05:06p        <DIR>          output
06/08/00  04:09p                1,303 stmaryout.dat
05/23/00  02:05p                  167 stmaryout.fil
06/08/00  04:08p                  207 stmaryout.fpr
06/08/00  04:09p                  174 stmaryout.mat
06/08/00  04:09p              169,070 stmaryout.net
06/08/00  04:09p                  130 stmaryout.spr
               9 File(s)        171,051 bytes

 Directory of E:\SMS\pc\tutorial\tut5\output

06/26/02  05:06p        <DIR>          .
06/26/02  05:06p        <DIR>          ..
06/08/00  04:04p                1,306 stmary3.dat
06/08/00  04:04p              193,035 stmary3.flo
06/08/00  04:04p                  195 stmary3.fpr
06/08/00  04:04p                  174 stmary3.mat
06/08/00  04:04p              184,470 stmary3.net
06/08/00  04:04p                1,310 stmary3.pro
06/08/00  04:09p                  126 stmary3.spr
               9 File(s)        380,616 bytes

 Directory of E:\SMS\pc\tutorial\tut6

06/26/02  05:06p        <DIR>          .
06/26/02  05:06p        <DIR>          ..
05/23/00  03:08p               85,204 ld.geo
01/29/99  01:00p            2,215,524 ld0dyn.sol
               4 File(s)      2,300,728 bytes
```

```
 Directory of E:\SMS\pc\tutorial\tut7

06/26/02  05:06p        <DIR>          .
06/26/02  05:06p        <DIR>          ..
01/29/99  01:00p                 1,023 head_ld.xys
05/23/00  03:08p                85,204 ld.geo
06/26/02  05:06p        <DIR>          output
               5 File(s)         86,227 bytes

 Directory of E:\SMS\pc\tutorial\tut7\output

06/26/02  05:06p        <DIR>          .
06/26/02  05:06p        <DIR>          ..
05/24/00  08:05a                 3,603 ld0.bc
05/24/00  08:06a                87,168 ld0.bin
05/24/00  08:01a                85,201 ld0.geo
05/24/00  08:08a               158,108 ld0.hot
05/24/00  08:01a                   122 ld0.mat
05/24/00  08:01a                    49 ld0.sim
05/24/00  08:08a                43,596 ld0.sol
05/24/00  08:15a                   116 ld0.spr
05/24/00  08:01a                    66 ld0_gf.run
05/24/00  08:01a                   109 ld0_rm.run
05/24/00  08:14a                   658 ld1.bc
05/24/00  08:20a                87,168 ld1.bin
05/24/00  08:14a                85,201 ld1.geo
05/24/00  08:20a               158,108 ld1.hot
05/24/00  08:14a                   122 ld1.mat
05/24/00  08:14a                    49 ld1.sim
05/24/00  08:20a                43,596 ld1.sol
05/24/00  08:16a                   116 ld1.spr
05/24/00  08:14a                    66 ld1_gf.run
05/24/00  08:14a                   131 ld1_rm.run
05/24/00  08:20a                   180 r2hot.dat
05/24/00  08:20a                   277 r2sol.dat
              24 File(s)        753,810 bytes

 Directory of E:\SMS\pc\tutorial\tut8

06/26/02  05:06p        <DIR>          .
06/26/02  05:06p        <DIR>          ..
06/26/02  05:06p        <DIR>          output
06/08/00  04:12p                   922 suecreek.dat
01/29/99  01:00p                   171 suecreek.fil
06/08/00  04:12p                   208 suecreek.fpr
06/08/00  04:12p                   214 suecreek.mat
06/08/00  04:12p                45,965 suecreek.net
06/08/00  04:12p                   128 suecreek.spr
               9 File(s)         47,608 bytes

 Directory of E:\SMS\pc\tutorial\tut8\output

06/26/02  05:06p        <DIR>          .
06/26/02  05:06p        <DIR>          ..
06/08/00  04:32p                 1,665 suecreek2.dat
06/08/00  04:32p                53,966 suecreek2.flo
06/08/00  04:32p                   210 suecreek2.fpr
```

40/53

```
06/08/00  04:32p                 214 suecreek2.mat
06/08/00  04:32p              45,966 suecreek2.net
06/08/00  04:32p               2,620 suecreek2.pro
06/08/00  04:33p                 130 suecreek2.spr
06/08/00  04:40p               1,665 suecreek3.dat
06/08/00  04:38p              53,966 suecreek3.flo
06/08/00  04:40p                 215 suecreek3.fpr
06/08/00  04:40p                 214 suecreek3.mat
06/08/00  04:40p              45,966 suecreek3.net
06/08/00  04:38p               2,620 suecreek3.pro
06/08/00  04:40p                 130 suecreek3.spr
              16 File(s)     209,547 bytes

 Directory of E:\SMS\pc\tutorial\tut9

06/26/02  05:06p        <DIR>          .
06/26/02  05:06p        <DIR>          ..
05/08/00  04:59p                 555 hydrograph.xys
06/26/02  05:06p        <DIR>          output
05/11/00  10:26a                 240 s.bc
05/11/00  10:26a             157,617 s.geo
05/10/00  03:27p                  45 s.sim
05/10/00  03:27p                  60 s_gf.run
05/11/00  12:53p                  99 s_rm.run
               9 File(s)     158,616 bytes

 Directory of E:\SMS\pc\tutorial\tut9\output

06/26/02  05:06p        <DIR>          .
06/26/02  05:06p        <DIR>          ..
05/16/00  04:46p                 743 s-cold.bc
05/16/00  04:24p             157,152 s-cold.bin
05/16/00  04:46p             157,931 s-cold.geo
05/16/00  04:46p                 122 s-cold.mat
05/16/00  04:46p                  55 s-cold.sim
05/16/00  04:26p              75,492 s-cold.sol
06/16/00  04:15p                 122 s-cold.spr
05/16/00  04:46p                  75 s-cold_gf.run
05/16/00  04:46p                 124 s-cold_rm.run
05/17/00  10:58a               3,518 s-hydro.bc
05/17/00  10:58a             157,152 s-hydro.bin
05/17/00  10:55a             157,963 s-hydro.geo
05/17/00  10:55a                 122 s-hydro.mat
05/17/00  10:55a               1,633 s-hydro.sed
05/17/00  10:55a                  82 s-hydro.sim
06/16/00  04:14p                 183 s-hydro.spr
05/17/00  12:00p             187,294 s-hydro_out.geo
05/17/00  10:55a                  78 s-hydro_gf.run
05/17/00  10:55a                 154 s-hydro_rm.run
05/17/00  10:55a                 246 s-hydro_s2.run
05/16/00  04:48p                 872 s-init.bc
05/16/00  04:48p             157,152 s-init.bin
05/16/00  04:48p             157,963 s-init.geo
05/16/00  04:48p                 122 s-init.mat
05/16/00  04:55p               1,622 s-init.sed
05/16/00  04:48p                  55 s-init.sim
05/16/00  04:51p              75,492 s-init.sol
```

```
05/16/00  04:48p                188 s-init.spr
05/17/00  10:37a            187,294 s-init_out.geo
05/16/00  04:48p                 75 s-init_gf.run
05/17/00  09:24a                149 s-init_rm.run
05/17/00  09:20a                206 s-init_s2.run
              34 File(s)    1,481,431 bytes

 Directory of E:\Utils

06/26/02  05:06p        <DIR>          .
06/26/02  05:06p        <DIR>          ..
06/26/02  05:06p        <DIR>          ALPTOAVI
06/26/02  05:06p        <DIR>          HWLOCK
06/26/02  05:06p        <DIR>          MergeAVI
10/19/98  11:54a                694 readme.txt
06/26/02  05:06p        <DIR>          READPDF
06/26/02  05:06p        <DIR>          VFW
06/26/02  05:06p        <DIR>          WIN32S
               9 File(s)            694 bytes

 Directory of E:\Utils\ALPTOAVI

06/26/02  05:06p        <DIR>          .
06/26/02  05:06p        <DIR>          ..
01/06/97  04:30p            438,784 ALP2AVI.EXE
               3 File(s)    438,784 bytes

 Directory of E:\Utils\HWLOCK

06/26/02  05:06p        <DIR>          .
06/26/02  05:06p        <DIR>          ..
02/11/99  03:27p                106 DATA.TAG
02/11/99  03:27p              7,713 data1.cab
06/26/02  05:06p        <DIR>          Instructions
05/30/97  09:31a              4,557 lang.dat
02/11/99  03:27p                334 layout.bin
06/26/02  05:06p        <DIR>          NetServr
05/06/97  12:15p                417 os.dat
11/24/98  02:10p             60,416 SETUP.EXE
02/11/99  03:27p                 72 SETUP.INI
02/11/99  03:25p             64,395 setup.ins
02/11/99  03:27p                 49 setup.lid
06/26/02  05:06p        <DIR>          Win31
06/26/02  05:06p        <DIR>          Win95
06/26/02  05:06p        <DIR>          WinNT
11/23/98  04:53p            286,246 _INST16.EX_
11/23/98  04:51p            291,594 _INST32I.EX_
12/17/97  04:30p              8,192 _ISDEL.EXE
12/17/97  04:29p             11,264 _SETUP.DLL
02/11/99  03:27p            417,101 _sys1.cab
02/11/99  03:27p             59,153 _user1.cab
              22 File(s)    1,211,609 bytes

 Directory of E:\Utils\HWLOCK\Instructions

06/26/02  05:06p        <DIR>          .
06/26/02  05:06p        <DIR>          ..
```

42/53

```
11/29/99  01:30p                11,673 hwlock.html
11/29/99  01:33p                21,589 nhwlock.html
               4 File(s)         33,262 bytes

 Directory of E:\Utils\HWLOCK\NetServr

06/26/02  05:06p        <DIR>           .
06/26/02  05:06p        <DIR>           ..
06/26/02  05:06p        <DIR>           Dos
06/23/98  10:44a                   109 netenble.001
06/26/02  05:06p        <DIR>           Nlm
03/27/97  03:20a                 7,567 Readme.txt
03/27/97  03:20a                    36 Version.cfg
06/26/02  05:06p        <DIR>           Win32
               8 File(s)          7,712 bytes

 Directory of E:\Utils\HWLOCK\NetServr\Dos

06/26/02  05:06p        <DIR>           .
06/26/02  05:06p        <DIR>           ..
03/27/97  03:20a                63,390 Nsrvdi.exe
03/27/97  03:20a                63,076 Nsrvdn.exe
               4 File(s)        126,466 bytes

 Directory of E:\Utils\HWLOCK\NetServr\Nlm

06/26/02  05:06p        <DIR>           .
06/26/02  05:06p        <DIR>           ..
03/27/97  03:20a                68,406 Nsrvni.nlm
               3 File(s)         68,406 bytes

 Directory of E:\Utils\HWLOCK\NetServr\Win32

06/26/02  05:06p        <DIR>           .
06/26/02  05:06p        <DIR>           ..
07/13/98  07:40a                    16 Mapfile.txt
07/01/97  04:05a                     2 netenble.001
03/27/97  03:20a               294,912 Nsrvgx.exe
03/27/97  03:20a               225,280 Nssrvice.exe
03/27/97  03:20a                 5,604 Nssrvice.txt
02/10/99  05:19p               200,795 NsUninst.dll
03/07/97  08:33a                26,059 Readme.txt
01/24/96  08:16a               145,233 Winmon.exe
              10 File(s)        897,901 bytes

 Directory of E:\Utils\HWLOCK\Win31

06/26/02  05:06p        <DIR>           .
06/26/02  05:06p        <DIR>           ..
09/09/98  03:36a                40,448 Install.exe
02/10/99  03:57p               200,800 RnboUnst.dll
09/09/98  03:36a                65,896 Sentinel.386
               5 File(s)        307,144 bytes

 Directory of E:\Utils\HWLOCK\Win95

06/26/02  05:06p        <DIR>           .
```

43/53

```
06/26/02  05:06p        <DIR>          ..
06/26/02  05:06p        <DIR>          Patch
02/10/99  03:57p               200,800 RnboUnst.dll
09/09/98  03:36a                69,092 Sentinel.vxd
09/09/98  03:36a                11,776 Sentstrt.exe
09/09/98  03:36a                34,304 Sentw9x.dll
09/09/98  03:36a                33,792 Sentw9x.exe
09/09/98  03:36a                 9,744 Sentw9x.hlp
               9 File(s)        359,508 bytes

 Directory of E:\Utils\HWLOCK\Win95\Patch

06/26/02  05:06p        <DIR>          .
06/26/02  05:06p        <DIR>          ..
03/04/96  07:01p                 2,582 Agrement.txt
03/06/96  09:18a                67,522 Nsupdate.001
01/29/96  12:40p               120,320 Nwlnkupd.exe
03/06/96  09:07a                 1,185 Readme.txt
10/13/93  12:58a               209,769 Setup.exe
               7 File(s)        401,378 bytes

 Directory of E:\Utils\HWLOCK\WinNT

06/26/02  05:06p        <DIR>          .
06/26/02  05:06p        <DIR>          ..
06/26/02  05:06p        <DIR>          Patch
06/26/02  05:06p        <DIR>          Rainbow
               4 File(s)              0 bytes

 Directory of E:\Utils\HWLOCK\WinNT\Patch

06/26/02  05:06p        <DIR>          .
06/26/02  05:06p        <DIR>          ..
09/08/95  03:17p                   399 Avextra.txt
07/10/96  02:38p                70,624 Hotfix.exe
11/14/96  01:49p                   134 Hotfix.ini
10/01/96  03:55p               690,824 Ntvdm.dbg
10/02/96  08:59a               412,432 Ntvdm.exe
11/14/96  02:12p                 2,568 Q143126.txt
11/14/96  02:36p                 1,092 Readme.txt
               9 File(s)      1,178,073 bytes

 Directory of E:\Utils\HWLOCK\WinNT\Rainbow

06/26/02  05:06p        <DIR>          .
06/26/02  05:06p        <DIR>          ..
06/26/02  05:06p        <DIR>          i386
02/10/99  03:57p               200,800 RnboUnst.dll
09/09/98  03:36a                31,744 Setupx86.exe
09/09/98  03:36a                43,520 Snti386.dll
               6 File(s)        276,064 bytes

 Directory of E:\Utils\HWLOCK\WinNT\Rainbow\i386

06/26/02  05:06p        <DIR>          .
06/26/02  05:06p        <DIR>          ..
09/09/98  03:36a                17,920 Rnbovtmp.dll
```

44/93

```
09/09/98  03:36a                14,321 Sentinel.hlp
09/09/98  03:36a                66,048 Senttemp.sys
               5 File(s)         98,289 bytes

 Directory of E:\Utils\MergeAVI

06/26/02  05:06p        <DIR>          .
06/26/02  05:06p        <DIR>          ..
08/11/98  12:01p                38,400 mergavi.doc
06/11/98  11:46a                50,688 mergeavi.exe
06/09/98  12:59p               956,928 Rt3d.avi
               5 File(s)      1,046,016 bytes

 Directory of E:\Utils\READPDF

06/26/02  05:06p        <DIR>          .
06/26/02  05:06p        <DIR>          ..
02/03/98  09:02p             4,018,104 ar32e301.exe
               3 File(s)      4,018,104 bytes

 Directory of E:\Utils\VFW

06/26/02  05:06p        <DIR>          .
06/26/02  05:06p        <DIR>          ..
12/30/97  08:51a             1,406,471 VFW11.EXE
               3 File(s)      1,406,471 bytes

 Directory of E:\Utils\WIN32S

06/26/02  05:06p        <DIR>          .
06/26/02  05:06p        <DIR>          ..
04/21/97  02:58p                 8,713 32SINST.INF
04/21/97  02:58p                 2,290 32SINST.IN_
04/21/97  02:58p                25,755 32SINST.MST
01/14/95  04:00p               158,180 CARDS.DLL
04/21/97  02:58p                44,963 CARDS.DL_
12/20/95  04:00p               284,432 COMCTL32.DLL
04/21/97  03:01p               137,631 COMCTL32.DL_
01/30/96  04:00p                54,784 COMDLG32.DLL
04/21/97  03:01p                27,490 COMDLG32.DL_
09/05/95  04:00p               109,056 COMPOBJ.DLL
09/04/95  04:00p               204,592 CRTDLL.DLL
04/21/97  03:02p               106,361 CRTDLL.DL_
09/04/95  04:00p                 6,828 CTYPE.NLS
04/21/97  03:02p                 2,860 CTYPE.NL_
01/14/95  04:00p                49,188 FREECELL.EXE
04/21/97  02:58p                24,458 FREECELL.EX_
01/14/95  04:00p                18,751 FREECELL.HLP
04/21/97  02:58p                12,844 FREECELL.HL_
10/30/95  04:00p               253,936 FTSRCH.DLL
04/21/97  03:02p               156,544 FTSRCH.DL_
04/21/97  02:58p                13,312 INIUPD.DLL
04/21/97  03:00p                   179 JUNK.DAT
09/04/95  04:00p                55,588 LOCALE.NLS
04/21/97  03:02p                18,402 LOCALE.NL_
01/30/96  04:00p                 5,120 LZ32.DLL
04/21/97  03:02p                 2,181 LZ32.DL_
```

GMS 3.1 Files

09/04/95	04:00p	7,142	L_INTL.NLS
04/21/97	03:02p	1,443	L_INTL.NL_
09/04/95	04:00p	7,142	L_TRK.NLS
04/21/97	03:02p	1,438	L_TRK.NL_
04/21/97	02:59p	74,528	MSCOMSTF.DLL
04/21/97	02:59p	24,960	MSCUISTF.DLL
04/21/97	02:59p	22,097	MSDETECT.INC
04/21/97	02:59p	24,544	MSDETSTF.DLL
04/21/97	02:59p	65,440	MSINSSTF.DLL
04/21/97	02:59p	14,928	MSSHLSTF.DLL
04/21/97	02:59p	6,144	MSUILSTF.DLL
01/30/96	04:00p	11,776	NETAPI32.DLL
04/21/97	03:02p	5,435	NETAPI32.DL_
09/04/95	04:00p	59,904	NTMSG.DLL
04/21/97	03:02p	22,627	NTMSG.DL_
09/05/95	04:00p	304,640	OLE2.DLL
04/15/95	04:00p	28,113	OLE2.REG
08/13/95	04:00p	57,328	OLE2CONV.DLL
07/24/95	04:00p	165,008	OLE2DISP.DLL
07/24/95	04:00p	152,976	OLE2NLS.DLL
09/05/95	04:00p	51,712	OLE2PROX.DLL
11/08/95	04:00p	25,088	OLE2THK.DLL
11/08/95	04:00p	366,080	OLE32.DLL
08/19/95	04:00p	232,720	OLEAUT32.DLL
09/04/95	04:00p	82,944	OLECLI.DLL
04/21/97	02:59p	45,404	OLECLI.DL_
01/30/96	04:00p	19,968	OLECLI32.DLL
04/21/97	03:02p	7,416	OLECLI32.DL_
09/05/95	04:00p	112,128	OLEDLG.DLL
01/30/96	04:00p	10,752	OLESVR32.DLL
04/21/97	03:02p	4,339	OLESVR32.DL_
09/04/95	04:00p	2,338	P_037.NLS
04/21/97	03:02p	1,107	P_037.NL_
09/04/95	04:00p	4,130	P_10000.NLS
04/21/97	03:02p	1,398	P_10000.NL_
09/04/95	04:00p	87,586	P_10001.NLS
04/21/97	03:02p	51,570	P_10001.NL_
09/04/95	04:00p	3,362	P_10006.NLS
04/21/97	03:03p	1,290	P_10006.NL_
09/04/95	04:00p	3,106	P_10007.NLS
04/21/97	03:03p	1,242	P_10007.NL_
09/04/95	04:00p	3,362	P_10029.NLS
04/21/97	03:03p	1,328	P_10029.NL_
09/04/95	04:00p	3,874	P_10079.NLS
04/21/97	03:03p	1,354	P_10079.NL_
09/04/95	04:00p	3,874	P_10081.NLS
04/21/97	03:03p	1,358	P_10081.NL_
09/04/95	04:00p	2,338	P_1026.NLS
04/21/97	03:03p	1,116	P_1026.NL_
09/04/95	04:00p	5,410	P_1250.NLS
04/21/97	03:03p	1,901	P_1250.NL_
09/04/95	04:00p	3,874	P_1251.NLS
04/21/97	03:03p	1,571	P_1251.NL_
09/04/95	04:00p	5,410	P_1252.NLS
04/21/97	03:03p	1,857	P_1252.NL_
09/04/95	04:00p	4,130	P_1253.NLS
04/21/97	03:03p	1,603	P_1253.NL_

46/53

09/04/95	04:00p	5,410	P_1254.NLS
04/21/97	03:03p	1,871	P_1254.NL_
09/04/95	04:00p	5,922	P_437.NLS
04/21/97	03:03p	2,068	P_437.NL_
09/04/95	04:00p	2,338	P_500.NLS
04/21/97	03:03p	1,111	P_500.NL_
09/04/95	04:00p	4,130	P_737.NLS
04/21/97	03:03p	1,509	P_737.NL_
09/04/95	04:00p	5,922	P_850.NLS
04/21/97	03:03p	2,067	P_850.NL_
09/04/95	04:00p	5,922	P_852.NLS
04/21/97	03:03p	2,064	P_852.NL_
09/04/95	04:00p	4,386	P_855.NLS
04/21/97	03:04p	1,733	P_855.NL_
09/04/95	04:00p	6,178	P_857.NLS
04/21/97	03:04p	2,067	P_857.NL_
09/04/95	04:00p	5,922	P_860.NLS
04/21/97	03:04p	2,079	P_860.NL_
09/04/95	04:00p	5,922	P_861.NLS
04/21/97	03:04p	2,079	P_861.NL_
09/04/95	04:00p	5,922	P_863.NLS
04/21/97	03:04p	2,074	P_863.NL_
09/04/95	04:00p	5,922	P_865.NLS
04/21/97	03:02p	2,075	P_865.NL_
09/04/95	04:00p	4,386	P_866.NLS
04/21/97	03:02p	1,731	P_866.NL_
09/04/95	04:00p	4,386	P_869.NLS
04/21/97	03:02p	1,734	P_869.NL_
09/04/95	04:00p	2,594	P_875.NLS
04/21/97	03:02p	1,165	P_875.NL_
09/04/95	04:00p	88,098	P_932.NLS
04/21/97	03:02p	51,518	P_932.NL_
09/04/95	04:00p	104,482	P_936.NLS
04/21/97	03:02p	51,236	P_936.NL_
10/18/95	04:00p	104,994	P_949.NLS
04/21/97	03:02p	89,709	P_949.NL_
09/04/95	04:00p	130,594	P_950.NLS
04/21/97	03:03p	99,815	P_950.NL_
09/04/95	04:00p	162,576	RICHED32.DLL
04/21/97	03:03p	114,648	RICHED32.DL_
01/30/96	04:00p	9,216	SCK16THK.DLL
04/21/97	03:03p	4,627	SCK16THK.DL_
04/21/97	02:59p	24,624	SETUP.EXE
04/21/97	02:59p	611	SETUP.LST
04/21/97	02:59p	55,620	SETUPAPI.INC
01/30/96	04:00p	7,680	SHELL32.DLL
04/21/97	03:03p	3,675	SHELL32.DL_
09/04/95	04:00p	262,148	SORTKEY.NLS
04/21/97	03:03p	155,005	SORTKEY.NL_
09/04/95	04:00p	3,306	SORTTBLS.NLS
04/21/97	03:03p	2,059	SORTTBLS.NL_
07/24/95	04:00p	5,472	STDOLE.TLB
07/24/95	04:00p	7,168	STDOLE32.TLB
03/01/95	04:00p	157,696	STORAGE.DLL
07/24/95	04:00p	177,824	TYPELIB.DLL
09/04/95	04:00p	34,080	UNICODE.NLS
04/21/97	03:03p	9,265	UNICODE.NL_

47/93

```
01/30/96  04:00p                 4,608 VERSION.DLL
04/21/97  03:03p                 1,985 VERSION.DL_
01/30/96  04:00p                36,587 W32S.386
04/21/97  03:03p                21,662 W32S.38_
01/30/96  04:00p               236,544 W32SCOMB.DLL
04/21/97  03:04p               133,944 W32SCOMB.DL_
01/30/96  04:00p                82,944 W32SKRNL.DLL
04/21/97  03:04p                46,282 W32SKRNL.DL_
01/30/96  04:00p                12,544 W32SYS.DLL
04/21/97  02:59p                 8,167 W32SYS.DL_
01/30/96  04:00p                   880 WIN32S.EXE
04/21/97  03:04p                   647 WIN32S.EX_
01/30/96  04:00p               167,424 WIN32S16.DLL
04/21/97  02:59p                77,989 WIN32S16.DL_
09/04/95  04:00p                21,473 WINDOWS.HLP
04/21/97  02:59p                13,751 WINDOWS.HL_
09/04/95  04:00p                   930 WINHLP32.CNT
04/21/97  02:59p                   591 WINHLP32.CN_
10/30/95  04:00p               336,400 WINHLP32.EXE
04/21/97  03:00p               205,577 WINHLP32.EX_
09/04/95  04:00p                31,684 WINHLP32.HLP
04/21/97  03:00p                15,674 WINHLP32.HL_
10/01/95  04:00p                65,628 WINMM.DLL
04/21/97  03:04p                33,442 WINMM.DL_
01/30/96  04:00p                29,184 WINMM16.DLL
04/21/97  03:00p                11,927 WINMM16.DL_
01/30/96  04:00p                 9,216 WINSPOOL.DRV
04/21/97  03:04p                 3,610 WINSPOOL.DR_
01/30/96  04:00p                13,824 WSOCK32.DLL
04/21/97  03:04p                 5,760 WSOCK32.DL_
04/21/97  02:58p                 9,813 _MSSETUP.EXE
04/21/97  02:58p                89,504 _MSTEST.EXE
             174 File(s)      7,752,721 bytes

 Directory of E:\WMS

06/26/02  05:04p        <DIR>          .
06/26/02  05:04p        <DIR>          ..
06/26/02  05:05p        <DIR>          pc
               3 File(s)              0 bytes

 Directory of E:\WMS\pc

06/26/02  05:05p        <DIR>          .
06/26/02  05:05p        <DIR>          ..
12/18/00  12:07p                   90 DATA.TAG
12/18/00  12:07p                95,563 data1.cab
06/26/02  05:04p        <DIR>          docs
06/26/02  05:04p        <DIR>          help
05/30/97  11:31a                 4,557 lang.dat
06/26/02  05:04p        <DIR>          latlon
12/18/00  12:07p                  353 layout.bin
06/26/02  05:05p        <DIR>          models
05/06/97  02:15p                  417 os.dat
06/26/02  05:05p        <DIR>          program
05/06/99  12:19p                90,654 setup.bmp
12/17/97  06:30p                59,904 SETUP.EXE
```

```
12/18/00  12:07p                    72 SETUP.INI
12/18/00  12:06p                62,361 setup.ins
12/18/00  12:07p                    49 setup.lid
06/26/02  05:05p        <DIR>          tutorial
06/26/02  05:05p        <DIR>          WMSHydro
06/26/02  05:05p        <DIR>          wmstour
12/17/97  06:47p               290,586 _INST32I.EX_
12/17/97  06:30p                 8,192 _ISDEL.EXE
12/17/97  06:29p                11,264 _SETUP.DLL
12/18/00  12:07p               208,590 _sys1.cab
12/18/00  12:07p                51,419 _user1.cab
              25 File(s)       884,071 bytes

 Directory of E:\WMS\pc\docs

06/26/02  05:04p        <DIR>          .
06/26/02  05:04p        <DIR>          ..
01/11/99  12:04p             4,018,860 hecman.pdf
03/06/00  09:48a             4,163,885 manual.pdf
12/11/98  12:58p             9,485,886 tr-55.pdf
04/17/00  10:57a             1,882,519 tutorial.pdf
05/18/99  11:37a               645,588 wmsav.pdf
               7 File(s)    20,196,738 bytes

 Directory of E:\WMS\pc\help

06/26/02  05:04p        <DIR>          .
06/26/02  05:04p        <DIR>          ..
11/10/99  11:08a                30,969 wms.cnt
11/10/99  11:08a             7,959,457 wms.hlp
               4 File(s)     7,990,426 bytes

 Directory of E:\WMS\pc\latlon

06/26/02  05:04p        <DIR>          .
06/26/02  05:04p        <DIR>          ..
08/12/99  12:31p               530,000 alaska.las
08/12/99  12:31p               530,000 alaska.los
07/07/99  02:18p                 2,704 alhpgn.las
07/07/99  02:18p                 2,704 alhpgn.los
07/07/99  02:19p                 4,624 azhpgn.las
07/07/99  02:19p                 4,624 azhpgn.los
07/07/99  02:19p                 5,520 cnhpgn.las
07/07/99  02:19p                 5,520 cnhpgn.los
07/07/99  02:19p                 3,952 cohpgn.las
07/07/99  02:19p                 3,952 cohpgn.los
08/12/99  12:31p               133,712 conus.las
08/12/99  12:31p               133,712 conus.los
07/07/99  02:19p                 3,344 cshpgn.las
07/07/99  02:19p                 3,344 cshpgn.los
07/07/99  02:19p                 6,384 emhpgn.las
07/07/99  02:19p                 6,384 emhpgn.los
07/07/99  02:19p                 8,568 ethpgn.las
07/07/99  02:19p                 8,568 ethpgn.los
07/07/99  02:19p                 4,624 flhpgn.las
07/07/99  02:19p                 4,624 flhpgn.los
07/07/99  02:19p                 2,704 gahpgn.las
```

49/53

07/07/99	02:19p	2,704	gahpgn.los
08/12/99	12:31p	227,856	hawaii.las
08/12/99	12:31p	227,856	hawaii.los
07/07/99	02:20p	3,536	hihpgn.las
07/07/99	02:20p	3,536	hihpgn.los
07/07/99	02:20p	3,344	kshpgn.las
07/07/99	02:20p	3,344	kshpgn.los
07/07/99	02:20p	2,736	kyhpgn.las
07/07/99	02:20p	2,736	kyhpgn.los
07/07/99	02:20p	3,600	lahpgn.las
07/07/99	02:20p	3,600	lahpgn.los
07/07/99	02:20p	1,872	mdhpgn.las
07/07/99	02:20p	1,872	mdhpgn.los
07/07/99	02:20p	2,704	mehpgn.las
07/07/99	02:20p	2,704	mehpgn.los
07/07/99	02:20p	4,560	mihpgn.las
07/07/99	02:20p	4,560	mihpgn.los
07/07/99	02:21p	3,120	mshpgn.las
07/07/99	02:21p	3,120	mshpgn.los
08/17/99	10:03a	57,888	nad27sp
08/17/99	10:03a	57,888	nad83sp
07/07/99	02:21p	3,024	nbhpgn.las
07/07/99	02:21p	3,024	nbhpgn.los
07/07/99	02:21p	3,696	ndhpgn.las
07/07/99	02:21p	3,696	ndhpgn.los
07/07/99	02:22p	2,704	nehpgn.las
07/07/99	02:22p	2,704	nehpgn.los
07/07/99	02:22p	4,560	nmhpgn.las
07/07/99	02:22p	4,560	nmhpgn.los
07/07/99	02:22p	4,080	nvhpgn.las
07/07/99	02:22p	4,080	nvhpgn.los
12/07/99	02:16p	4,784	nyhpgn.las
12/07/99	02:17p	4,784	nyhpgn.los
07/07/99	02:22p	2,288	ohhpgn.las
07/07/99	02:22p	2,288	ohhpgn.los
07/07/99	02:22p	3,696	okhpgn.las
07/07/99	02:22p	3,696	okhpgn.los
08/12/99	12:31p	13,776	prvi.las
08/12/99	12:31p	13,776	prvi.los
07/07/99	02:22p	1,664	pvhpgn.las
07/07/99	02:23p	1,664	pvhpgn.los
07/07/99	02:23p	4,368	sdhpgn.las
07/07/99	02:23p	4,368	sdhpgn.los
08/12/99	12:31p	30,256	stgeorge.las
08/12/99	12:31p	30,256	stgeorge.los
08/12/99	12:31p	13,776	stlrnc.las
08/12/99	12:31p	13,776	stlrnc.los
08/12/99	12:31p	3,696	stpaul.las
08/12/99	12:31p	3,696	stpaul.los
07/07/99	02:23p	2,352	tnhpgn.las
07/07/99	02:23p	2,352	tnhpgn.los
07/07/99	02:23p	4,080	uthpgn.las
07/07/99	02:23p	4,080	uthpgn.los
07/07/99	02:24p	2,736	vahpgn.las
07/07/99	02:24p	2,736	vahpgn.los
08/16/99	11:18a	964,656	vertconc.94
08/16/99	11:18a	964,656	vertcone.94

50/93

```
08/16/99  11:18a              964,656 vertconw.94
07/07/99  02:24p                3,536 wihpgn.las
07/07/99  02:24p                3,536 wihpgn.los
07/07/99  02:24p                6,384 wmhpgn.las
07/07/99  02:24p                6,384 wmhpgn.los
07/07/99  02:24p                5,776 wohpgn.las
07/07/99  02:24p                5,776 wohpgn.los
07/07/99  02:24p                6,800 wthpgn.las
07/07/99  02:24p                6,800 wthpgn.los
07/07/99  02:24p                2,728 wvhpgn.las
07/07/99  02:25p                2,728 wvhpgn.los
07/07/99  02:25p                2,992 wyhpgn.las
07/07/99  02:25p                2,992 wyhpgn.los
              93 File(s)      5,196,176 bytes

 Directory of E:\WMS\pc\models

06/26/02  05:05p        <DIR>          .
06/26/02  05:05p        <DIR>          ..
06/26/02  05:04p        <DIR>          Hec1
06/26/02  05:04p        <DIR>          HY8
06/26/02  05:04p        <DIR>          modrat
06/26/02  05:04p        <DIR>          NFF
06/26/02  05:04p        <DIR>          Topaz
06/26/02  05:05p        <DIR>          TR20
06/26/02  05:05p        <DIR>          TR55
               9 File(s)              0 bytes

 Directory of E:\WMS\pc\models\Hec1

06/26/02  05:04p        <DIR>          .
06/26/02  05:04p        <DIR>          ..
10/19/99  04:40p              866,816 hec1.exe
               3 File(s)        866,816 bytes

 Directory of E:\WMS\pc\models\HY8

06/26/02  05:04p        <DIR>          .
06/26/02  05:04p        <DIR>          ..
09/15/96  06:01a              192,908 Balance.exe
09/15/96  06:01a                7,347 Balance.hlp
09/15/96  06:01a                3,054 Boxnhi.inp
09/15/96  06:01a                  255 Boxnhi.tw
09/15/96  06:01a               82,704 Brt71enr.exe
09/15/96  06:01a                1,962 Cabc.dat
09/15/96  06:01a                2,707 Csbc.dat
09/15/96  06:01a               13,210 Cse.com
09/15/96  06:01a               10,761 Cse.doc
09/15/96  06:01a                2,932 Cse.hlp
09/15/96  06:01a              246,578 Culvert.exe
09/15/96  06:01a               31,228 Culvert.hlp
09/15/96  06:01a                1,812 Elpc1.dat
09/15/96  06:01a                1,201 Elpc2.dat
09/15/96  06:01a              227,178 Energy.exe
09/15/96  06:01a               28,022 Energy.hlp
09/15/96  06:01a               18,100 Equation.hlp
09/15/96  06:01a                2,164 Error.hlp
```

51/93

```
09/15/96  06:01a                12,484 Getfile.exe
09/15/96  06:01a                36,932 Hy8.exe
09/15/96  06:01a                 6,687 Hy8.hlp
09/15/96  06:01a                 3,048 Hy81.inp
09/15/96  06:01a                   252 Hy81.tw
09/15/96  06:01a                 4,710 Hy82.inp
09/15/96  06:01a                   252 Hy82.tw
09/15/96  06:01a                90,193 Hy8ed.hlp
09/15/96  06:01a                12,520 Hy8edi.hlp
09/15/96  06:01a                24,764 Hy8rn.exe
09/15/96  06:01a                95,526 Hyd.exe
09/15/96  06:01a                 9,191 Hyd.hlp
09/15/96  06:01a                 1,472 Hyd-eq.hlp
09/15/96  06:01a                   510 Inhyd.qt
09/15/96  06:01a                 4,785 Inlet.hlp
09/15/96  06:01a                 1,193 Lshpa.dat
09/15/96  06:01a                   865 Lslpa.dat
09/15/96  06:01a                 4,716 Mltnhi.inp
09/15/96  06:01a                 6,749 Msherc.com
09/15/96  06:01a                 3,352 Outlet.hlp
09/15/96  06:01a                   633 Pac11.dat
09/15/96  06:01a                   645 Pac11h.dat
09/15/96  06:01a                   703 Pac12.dat
09/15/96  06:01a                   756 Pac12h.dat
09/15/96  06:01a                 1,223 Pac21.dat
09/15/96  06:01a                 1,189 Pac22.dat
09/15/96  06:01a                   761 Pac23.dat
09/15/96  06:01a                 1,992 Pac33.dat
09/15/96  06:01a                 2,095 Pac33h.dat
09/15/96  06:01a                   940 Pac44.dat
09/15/96  06:01a                 1,571 Pca.dat
11/10/99  10:10a                   222 Print.cnf
09/15/96  06:01a                 1,745 Profile.cse
09/15/96  06:01a                15,333 Readme.hlp
09/15/96  06:01a                89,594 Report.exe
09/15/96  06:01a               155,958 Route.exe
09/15/96  06:01a                 6,624 Route.hlp
09/15/96  06:01a                 1,365 Route-eq.hlp
09/15/96  06:01a                 3,048 Rrpnhi.inp
09/15/96  06:01a                31,202 Setup.exe
09/15/96  06:01a               163,578 Single.exe
09/15/96  06:01a                 1,090 Spsa.dat
09/15/96  06:01a                23,842 Twater.exe
              63 File(s)      1,700,433 bytes

 Directory of E:\WMS\pc\models\modrat

06/26/02  05:04p        <DIR>          .
06/26/02  05:04p        <DIR>          ..
04/06/00  10:10a               106,496 modrat.exe
               3 File(s)        106,496 bytes

 Directory of E:\WMS\pc\models\NFF

06/26/02  05:04p        <DIR>          .
06/26/02  05:04p        <DIR>          ..
10/19/99  04:40p               166,255 nffpcdat.bin
```

52/93

```
10/19/99  04:40p                  624 nffpcdat.ndx
               4 File(s)        166,879 bytes

 Directory of E:\WMS\pc\models\Topaz

06/26/02  05:04p        <DIR>          .
06/26/02  05:04p        <DIR>          ..
10/19/99  04:40p                499,200 wmstopaz.exe
               3 File(s)        499,200 bytes

 Directory of E:\WMS\pc\models\TR20

06/26/02  05:05p        <DIR>          .
06/26/02  05:05p        <DIR>          ..
10/19/99  04:40p                533,504 tr20.exe
               3 File(s)        533,504 bytes

 Directory of E:\WMS\pc\models\TR55

06/26/02  05:05p        <DIR>          .
06/26/02  05:05p        <DIR>          ..
11/24/97  09:30p                 47,221 tr55i.dat
11/24/97  09:31p                 47,207 tr55ia.dat
11/24/97  09:31p                 47,226 tr55ii.dat
11/24/97  09:31p                 47,225 tr55iii.dat
               6 File(s)        188,879 bytes

 Directory of E:\WMS\pc\program

06/26/02  05:05p        <DIR>          .
06/26/02  05:05p        <DIR>          ..
10/19/99  04:39p                 19,968 check32.dll
10/19/99  04:40p                 86,016 Lf90wiod.dll
10/19/99  04:51p                118,272 nslms324.dll
11/23/99  10:50a                  4,534 readme.txt
10/19/99  04:40p              1,171,456 Wdmwms.dll
12/11/00  04:00p              7,331,840 wms60.exe
12/14/00  01:35p              8,478,720 wms61b.exe
               9 File(s)     17,210,806 bytes

 Directory of E:\WMS\pc\tutorial

06/26/02  05:05p        <DIR>          .
06/26/02  05:05p        <DIR>          ..
10/04/99  03:50p                  6,923 af.dxf
10/04/99  03:49p                 52,511 afpts.tin
10/04/99  03:49p                  1,338 afrat.map
10/04/99  03:49p                  1,324 afrat.rat
10/04/99  03:49p                     38 afrat.sup
10/04/99  03:49p                128,442 afrat.tin
10/04/99  03:49p                127,135 aftr55.tin
10/04/99  03:50p                    610 arco.dbf
10/04/99  03:50p                    237 arco.img
10/04/99  03:50p                 18,658 arco.ini
10/04/99  03:50p                  1,592 arco.map
10/04/99  03:50p                  6,244 arco.shp
10/04/99  03:50p                    372 arco.shx
```

GMS 3.1 Files

10/04/99	03:50p	57	arco.sup
10/04/99	03:50p	237	arcofinal.img
10/04/99	03:50p	18,658	arcofinal.ini
10/04/99	03:50p	18,091	arcofinal.map
10/04/99	03:50p	72	arcofinal.sup
10/04/99	03:49p	2,292	asparcs1.dbf
10/04/99	03:49p	14,620	asparcs1.shp
10/04/99	03:49p	476	asparcs1.shx
10/04/99	03:49p	2,292	asparcs2.dbf
10/04/99	03:49p	14,588	asparcs2.shp
10/04/99	03:49p	476	asparcs2.shx
10/04/99	03:49p	340,452	aspdelin.asc
10/04/99	03:49p	123,832	aspdelin.fdr
10/04/99	03:49p	1,089,537	aspen.dem
10/04/99	03:49p	30,172	aspen.dxf
10/04/99	03:49p	25,257	aspen.map
10/04/99	03:49p	8,077	aspen.sol
10/04/99	03:49p	7,614	aspen.stm
10/04/99	03:49p	23,876	aspen2.map
10/04/99	03:49p	1,614	aspenbnd.map
10/04/99	03:49p	9,569	aspencal.sol
10/04/99	03:49p	94,872	aspencal.tin
10/04/99	03:50p	496,812	aspencn.fdr
10/04/99	03:50p	18,268	aspencn.ini
10/04/99	03:50p	54,345	aspencn.map
10/04/99	03:50p	46	aspencn.sup
10/04/99	03:50p	756,224	aspenfil.dem
10/04/99	03:50p	368	aspenlu.dbf
10/04/99	03:50p	6,728	aspenlu.shp
10/04/99	03:50p	180	aspenlu.shx
10/04/99	03:50p	402	aspenrgn.map
10/12/99	12:23p	114	aspenso.dbf
10/12/99	12:19p	3,180	aspenso.shp
10/12/99	12:19p	124	aspenso.shx
10/04/99	03:50p	622	aspentin.hc1
10/04/99	03:50p	18,270	aspentin.ini
10/04/99	03:50p	44	aspentin.sup
10/04/99	03:50p	94,872	aspentin.tin
10/04/99	03:50p	231	aspentrc.img
10/04/99	03:50p	812,692	aspentrc.tif
10/04/99	03:50p	61,332	asplugrd.asc
10/04/99	03:50p	834	asppnts1.dbf
10/04/99	03:50p	1,444	asppnts1.shp
10/04/99	03:50p	484	asppnts1.shx
10/04/99	03:50p	579	asppoly1.dbf
10/04/99	03:50p	23,788	asppoly1.shp
10/04/99	03:50p	124	asppoly1.shx
10/04/99	03:50p	117	asppoly2.dbf
10/04/99	03:50p	23,788	asppoly2.shp
10/04/99	03:50p	124	asppoly2.shx
10/12/99	12:31p	259,401	aspsogrd.asc
10/04/99	03:50p	65,003	asptutor.map
10/04/99	03:50p	89,990	auto.tin
10/04/99	03:50p	1,329	blackriv.map
10/04/99	03:50p	44	blackriv.sup
10/04/99	03:50p	1,383,612	blackriv.tin
10/04/99	03:50p	8,496	cn.map

59/53

```
10/04/99  03:50p            1,494,045 dednm.inp
06/28/00  02:07a            2,160,753 deercrk.gdm
06/28/00  02:07a                  244 deercrk.map
06/28/00  02:07a                   45 deercrk.sup
07/13/00  07:32a                7,222 digitize.tin
10/04/99  03:50p                  303 ding.stg
10/04/99  03:50p              126,284 ding.tin
10/04/99  03:50p                1,950 dnmcnt.inp
10/04/99  03:50p               70,510 flats.map
10/04/99  03:50p                  272 flats.stg
10/04/99  03:50p              571,887 flats.tin
10/04/99  03:50p                   55 flood.sup
10/04/99  03:50p              286,864 flovec.dat
10/04/99  03:50p              101,565 jonesbak.tin
10/04/99  03:50p                  234 jonesbnd.img
10/04/99  03:50p                1,074 jonesbnd.map
10/04/99  03:50p              707,818 jonesbnd.tif
10/04/99  03:50p               87,713 jonescyn.grd
10/04/99  03:50p                  226 jonescyn.img
10/04/99  03:50p                3,402 jonescyn.map
10/04/99  03:50p                6,849 jonescyn.sol
01/09/98  03:00a                   72 jonescyn.tfw
10/04/99  03:50p              544,004 jonescyn.tif
10/04/99  03:50p               69,512 jonescyn.tin
10/04/99  03:50p                4,463 jonesdem.map
10/04/99  03:50p               34,992 jonesfv.dat
10/04/99  03:50p            5,136,246 O43113f3.tif
10/04/99  03:50p               59,183 rainfall.scl
10/04/99  03:50p                2,543 rainfall.xy
10/04/99  03:50p                3,020 redri.hc1
10/13/99  03:42p                4,889 redri.map
10/04/99  03:50p               46,928 redri.out
10/04/99  03:50p               10,660 redri.sol
10/04/99  03:50p               10,660 redri.thy
10/04/99  03:50p                2,220 rocky.hc1
10/04/99  03:50p               98,513 rocky.out
10/04/99  03:50p               12,456 rocky.sol
03/25/94  10:29a              166,180 rocky.tin
10/04/99  03:50p                4,635 rockyhec.map
10/04/99  03:50p                   65 rockyhec.sup
10/04/99  03:50p              228,805 rockyhec.tin
10/04/99  03:50p                1,388 rockynff.nff
10/04/99  03:50p              222,401 rockynff.tin
10/04/99  03:50p               28,632 sample.tin
10/04/99  03:50p                5,263 scsland.tbl
10/04/99  03:49p               10,931 scstabls.ser
10/04/99  03:50p                5,262 scstut.tbl
02/01/96  12:27a            1,085,440 slc.dem
10/04/99  03:50p                  153 soiltype.tbl
10/06/99  03:15p               12,564 tape22.bak
             122 File(s)   19,797,561 bytes

 Directory of E:\WMS\pc\WMSHydro

06/26/02  05:05p        <DIR>          .
06/26/02  05:05p        <DIR>          ..
06/26/02  05:05p        <DIR>          extension
```

```
03/01/99  11:31a                 1,663 ReadMe.txt
06/26/02  05:05p        <DIR>          tutorial
05/18/99  11:37a               645,588 wmsav.pdf
               6 File(s)        647,251 bytes

 Directory of E:\WMS\pc\WMSHydro\extension

06/26/02  05:05p        <DIR>          .
06/26/02  05:05p        <DIR>          ..
06/12/98  01:47p                17,408 avdlog.dat
06/12/98  01:47p               201,728 avdlog.dll
06/12/98  01:47p             2,985,321 avdlog.exe
05/18/99  11:23a               747,213 WMSHydro.avx
               6 File(s)      3,951,670 bytes

 Directory of E:\WMS\pc\WMSHydro\tutorial

06/26/02  05:05p        <DIR>          .
06/26/02  05:05p        <DIR>          ..
05/18/99  09:49a                 1,039 aspenbsn02.dbf
03/02/99  12:37p                   172 aspenbsn01.sbn
03/02/99  12:37p                   124 aspenbsn01.sbx
03/02/99  12:37p                23,980 aspenbsn01.shp
03/02/99  12:37p                   124 aspenbsn01.shx
05/18/99  09:55a                 1,039 aspenbsn03.dbf
03/03/99  01:45a                   172 aspenbsn02.sbn
03/03/99  01:45a                   124 aspenbsn02.sbx
03/03/99  01:45a                23,980 aspenbsn02.shp
03/03/99  01:45a                   124 aspenbsn02.shx
03/03/99  01:26p                    93 aspenbsn04.dbf
03/03/99  01:50a                   172 aspenbsn03.sbn
03/03/99  01:50a                   124 aspenbsn03.sbx
03/03/99  01:50a                23,980 aspenbsn03.shp
03/03/99  01:50a                   124 aspenbsn03.shx
05/18/99  09:20a                    93 aspenbsn01.dbf
03/03/99  11:14a                   172 aspenbsn04.sbn
03/03/99  11:14a                   124 aspenbsn04.sbx
03/03/99  11:14a                23,980 aspenbsn04.shp
03/03/99  11:14a                   124 aspenbsn04.shx
08/19/98  08:57a                   368 aspenlu.dbf
10/14/98  02:06p                   236 aspenlu.sbn
10/14/98  02:06p                   132 aspenlu.sbx
07/27/98  04:11p                 6,728 aspenlu.shp
07/27/98  04:11p                   180 aspenlu.shx
05/18/99  09:50a                   198 aspenout02.dbf
03/03/99  09:35a                   164 aspenout02.sbn
03/03/99  09:35a                   124 aspenout02.sbx
03/03/99  09:35a                   156 aspenout02.shp
03/03/99  09:35a                   116 aspenout02.shx
05/18/99  09:55a                   198 aspenout03.dbf
03/03/99  01:50a                   164 aspenout03.sbn
03/03/99  01:50a                   124 aspenout03.sbx
03/03/99  01:50a                   156 aspenout03.shp
03/03/99  01:50a                   116 aspenout03.shx
03/03/99  11:23a                   146 aspenso.dbf
10/14/98  02:20p                   148 aspenso.sbn
10/14/98  02:20p                   116 aspenso.sbx
```

56/53

```
07/27/98  04:15p                 3,180 aspenso.shp
07/27/98  04:15p                   124 aspenso.shx
03/02/99  12:44p                   489 aspenstr01.dbf
03/02/99  08:40p                   836 aspenstr01.sbn
03/02/99  08:40p                   212 aspenstr01.sbx
03/02/99  08:40p                14,620 aspenstr01.shp
03/02/99  08:40p                   476 aspenstr01.shx
05/18/99  09:49a                 2,230 aspenstr02.dbf
03/03/99  09:35a                   836 aspenstr02.sbn
03/03/99  09:35a                   212 aspenstr02.sbx
03/03/99  09:35a                14,620 aspenstr02.shp
03/03/99  09:35a                   476 aspenstr02.shx
05/18/99  09:55a                 2,230 aspenstr03.dbf
03/03/99  09:39a                   836 aspenstr03.sbn
03/03/99  09:39a                   212 aspenstr03.sbx
03/03/99  09:39a                14,620 aspenstr03.shp
03/03/99  09:39a                   476 aspenstr03.shx
06/26/02  05:05p        <DIR>          avwmssup01
08/08/97  11:18a                 5,263 scsland.tbl
              59 File(s)       171,382 bytes

 Directory of E:\WMS\pc\WMSHydro\tutorial\avwmssup01

06/26/02  05:05p        <DIR>          .
06/26/02  05:05p        <DIR>          ..
05/05/99  10:57a                 2,191 aspen.sol
05/18/99  10:22a                 1,293 aspenbsn.dbf
10/13/98  11:09a                23,980 aspenbsn.shp
10/13/98  11:09a                   124 aspenbsn.shx
05/18/99  10:24a                   512 aspenout.dbf
10/13/98  11:16a                   156 aspenout.shp
10/13/98  11:16a                   116 aspenout.shx
05/03/99  02:18p                 3,407 aspenstrm.dbf
05/03/99  02:18p                   836 aspenstrm.sbn
05/03/99  02:18p                   212 aspenstrm.sbx
02/26/99  01:03p                14,620 aspenstrm.shp
02/26/99  01:03p                   476 aspenstrm.shx
05/18/99  10:05a                   111 avwmssup01.sup
03/03/99  01:36p                     9 describe.txt
              16 File(s)        48,043 bytes

 Directory of E:\WMS\pc\wmstour

06/26/02  05:05p        <DIR>          .
06/26/02  05:05p        <DIR>          ..
03/28/00  01:04p                 5,159 channels.htm
11/29/99  01:52p                 5,127 channels2.htm
11/29/99  01:52p                 5,111 channels3.htm
03/28/00  01:05p                 5,124 CN.htm
11/23/99  02:55p                 1,764 concmod.htm
03/28/00  01:06p                 5,135 culverts.htm
11/29/99  01:52p                 5,056 curbs.htm
11/29/99  01:52p                 5,147 DEM.htm
11/29/99  01:52p                 5,115 demdelineate.htm
03/28/00  01:07p                 5,205 detbasin.htm
03/28/00  01:08p                 4,955 draped.htm
03/28/00  01:08p                 5,177 editstrip.htm
```

57/93

```
11/29/99  01:52p                5,143 end.htm
11/29/99  01:52p                5,421 findingdata.htm
11/29/99  01:52p                5,495 floaccum.htm
11/29/99  01:52p                5,177 flovec.htm
11/29/99  01:52p                5,264 GISVector3.htm
11/29/99  01:52p                5,199 GISVector4.htm
11/29/99  01:52p                5,051 GISVector5.htm
11/29/99  01:52p                4,998 GISVector6.htm
03/28/00  01:10p                5,407 GISVector.htm
11/29/99  01:52p                5,156 GISVector2.htm
03/28/00  01:11p                5,351 HEC-1.htm
11/29/99  01:52p                5,328 HEC-12.htm
11/29/99  01:52p                4,977 HEC-13.htm
11/29/99  01:52p                5,087 HEC-14.htm
11/29/99  01:52p                5,107 HEC-15.htm
11/29/99  01:52p                5,227 HEC-16.htm
11/29/99  01:52p                5,123 HEC-17.htm
03/28/00  01:13p                5,327 helpstrip.htm
03/28/00  01:13p                5,082 HSPF.htm
03/28/00  01:13p                5,117 HSPF2.htm
03/28/00  01:14p                5,013 HSPF3.htm
06/26/02  05:05p        <DIR>         images
03/28/00  01:15p                5,216 images.htm
11/29/99  01:52p                6,671 index.html
11/29/99  01:52p                5,250 lacounty.htm
11/29/99  01:52p                5,219 lacounty2.htm
11/29/99  01:52p                4,869 layout.htm
03/28/00  01:17p                5,263 macros.htm
11/29/99  01:52p                5,279 maricopa.htm
11/29/99  01:52p                8,031 modules.htm
11/29/99  01:52p                5,277 NFF.htm
11/29/99  01:52p                5,167 outletpoint.htm
11/29/99  01:52p                5,111 postprocess.htm
11/29/99  01:52p                5,171 postprocess2.htm
03/28/00  01:18p                5,007 rational.htm
11/29/99  01:52p                5,295 rational2.htm
11/29/99  01:52p                4,914 support.htm
03/28/00  01:20p                5,137 TINs.htm
11/29/99  01:52p                5,378 TINs2.htm
11/29/99  01:52p                5,134 TINs3.htm
11/29/99  01:52p                4,996 TINs4.htm
11/29/99  01:52p                5,100 TINs5.htm
11/29/99  01:52p                5,659 tools.htm
11/29/99  01:52p                5,063 TR-20-55.htm
11/29/99  01:52p                5,123 TR-202.htm
11/29/99  01:52p                4,979 TR-203.htm
03/28/00  01:22p                5,491 traveltimes.htm
11/29/99  01:52p                5,456 traveltimes2.htm
11/29/99  01:52p                5,232 WMSHydro.htm
06/26/02  05:05p        <DIR>         _borders
06/26/02  05:05p        <DIR>         _derived
06/26/02  05:05p        <DIR>         _overlay
06/26/02  05:05p        <DIR>         _themes
06/26/02  05:05p        <DIR>         _vti_cnf
06/26/02  05:05p        <DIR>         _vti_pvt
              69 File(s)        311,613 bytes
```

Directory of E:\WMS\pc\wmstour\images

06/26/02	05:05p	<DIR>		.
06/26/02	05:05p	<DIR>		..
10/27/99	02:32p		1,145	2dgridmod.jpg
10/27/99	02:32p		3,198	allmodules.jpg
11/22/99	01:37p		16,766	areacontours.jpg
10/27/99	02:32p		17,633	basinarea.jpg
10/27/99	02:32p		27,540	basindata.jpg
11/22/99	09:32a		13,482	basins-geometry.jpg
11/22/99	09:32a		16,069	basins-tree.jpg
11/23/99	03:48p		72,268	basinsmodel.jpg
11/23/99	12:13p		21,670	channeldlg3.jpg
10/27/99	02:31p		17,965	cn.jpg
11/22/99	09:27a		34,121	cn2.jpg
11/23/99	12:44p		2,816	culver1.gif
11/23/99	12:55p		10,629	curbs.2.jpg
11/03/99	11:56a		45,621	dem1.jpg
11/03/99	11:59a		46,049	dem2.jpg
11/03/99	11:59a		50,627	dem3.jpg
11/03/99	11:59a		50,778	dem3b.jpg
11/03/99	11:59a		51,218	dem4.jpg
10/27/99	02:31p		1,096	demmod.jpg
11/09/99	01:39p		56,123	demtofobj.jpg
11/23/99	11:55a		28,458	detentiondlg3.jpg
11/22/99	01:37p		13,045	distancecontours.jpg
10/27/99	02:32p		14,187	editwindow.jpg
10/27/99	02:32p		3,200	emptyhelpstrip.jpg
11/02/99	05:02p		1,090	end.ht1.gif
11/23/99	12:59p		37,704	f0601basins.jpg
10/27/99	02:32p		38,656	F0601Dialog.jpg
11/23/99	02:33p		29,658	faspen03.jpg
11/23/99	12:36p		18,055	flood.jpg
11/09/99	01:47p		7,671	fobj.jpg
11/09/99	12:20p		15,962	fobject1.jpg
11/22/99	09:06a		56,386	geomparms.jpg
11/22/99	09:32a		24,249	HEC-1dialog.jpg
11/22/99	01:37p		36,883	HEC22Dialog.jpg
10/27/99	02:32p		7,526	helpstrip.jpg
11/23/99	03:48p		18,397	hspfbasins.jpg
11/23/99	03:48p		26,164	hspfedit.jpg
11/22/99	01:37p		21,751	HY8Dialog.jpg
10/27/99	02:31p		1,031	hydmodelmod.jpg
11/22/99	01:37p		11,660	hydro.jpg
11/23/99	02:23p		19,043	hydrotxt.jpg
11/22/99	01:37p		33,236	idf.jpg
11/03/99	12:02p		85,671	image.jpg
10/27/99	03:50p		1,067	index.1.gif
10/27/99	03:50p		1,116	index.2.gif
10/27/99	02:32p		55,943	layout.jpg
11/09/99	01:47p		19,638	luse.jpg
10/27/99	02:31p		21,956	lusecn.jpg
10/27/99	02:31p		4,249	macros.jpg
10/27/99	02:32p		1,025	mapmod.jpg
11/22/99	01:37p		21,303	maricopa-sgraph.jpg
11/22/99	01:37p		16,856	maricopatc.jpg
11/22/99	01:37p		23,830	maricopauh.jpg

```
11/22/99  01:37p                17,857 modratdlog.jpg
10/27/99  02:30p                 1,306 next.gif
11/22/99  01:37p                31,719 Nffdialog.jpg
11/22/99  01:37p                32,687 nfftxt.jpg
10/27/99  02:31p                 1,267 prev.gif
11/22/99  01:37p                19,085 rational.jpg
10/27/99  02:32p                24,658 rational_hydros.jpg
11/22/99  01:37p                10,262 reservoir.jpg
10/27/99  02:32p                 1,012 scatpointmod.jpg
10/27/99  02:32p               106,170 screenshot.jpg
10/27/99  02:32p                26,434 snowmelt.jpg
10/27/99  02:32p                18,362 soilcn.jpg
11/09/99  01:47p                24,746 soiltypes.jpg
10/27/99  02:31p                17,164 storage-capacity.jpg
10/27/99  02:31p                52,674 tablecn.jpg
11/22/99  09:06a                57,165 tccalcparms.jpg
11/22/99  09:06a                22,501 tclagdlog.jpg
11/22/99  09:06a                18,898 tcmapcompdlog.jpg
11/22/99  09:06a                12,928 tcmapcompdlog2.jpg
11/22/99  01:37p                12,365 thiessen.jpg
11/22/99  01:40p                21,074 thiessen-weights.jpg
10/27/99  02:31p               213,924 thiessen-weights.tif
10/27/99  02:31p                 4,767 timearea.jpg
11/03/99  01:06p                26,141 tin1.jpg
11/03/99  01:06p                27,468 tin2.jpg
11/03/99  01:06p                30,803 tin3.jpg
11/03/99  01:06p                50,642 tin4.jpg
11/03/99  01:06p                50,606 tin5.jpg
11/03/99  01:06p                51,830 tin6.jpg
11/03/99  12:04p                43,633 tinimage.jpg
10/27/99  02:32p                 1,109 tinmod.jpg
10/27/99  02:32p                 6,895 tools.jpg
10/27/99  02:32p                 7,175 topofhelpstrip.jpg
11/22/99  02:01p                17,032 TR-20dialog.jpg
11/22/99  01:37p                17,683 TR-55Dialog.jpg
10/27/99  02:32p                11,084 tree-only.jpg
10/27/99  05:09p                22,489 vertopts.jpg
11/23/99  03:48p                28,679 WDMdataset.jpg
11/23/99  03:48p                45,179 wdmviewer.jpg
11/23/99  02:33p                30,174 wms01.jpg
11/23/99  12:02p                18,271 xsectcontours.jpg
11/23/99  12:02p                20,382 xsection.jpg
06/26/02  05:05p        <DIR>          _vti_cnf
              98 File(s)      2,529,780 bytes

 Directory of E:\WMS\pc\wmstour\images\_vti_cnf

06/26/02  05:05p        <DIR>          .
06/26/02  05:05p        <DIR>          ..
11/23/99  05:25p                   419 2dgridmod.jpg
11/23/99  05:25p                   419 allmodules.jpg
11/22/99  01:56p                   478 areacontours.jpg
11/23/99  05:25p                   411 basinarea.jpg
11/23/99  05:25p                   411 basindata.jpg
11/22/99  09:32a                   468 basins-geometry.jpg
11/22/99  02:01p                   490 basins-tree.jpg
11/23/99  05:25p                   420 basinsmodel.jpg
```

11/23/99	05:25p	424	channeldlg3.jpg
11/23/99	05:25p	411	cn.jpg
11/22/99	02:04p	496	cn2.jpg
11/23/99	05:25p	422	culver1.gif
11/23/99	05:25p	420	curbs.2.jpg
11/03/99	11:56a	487	dem1.jpg
11/03/99	01:21p	478	dem2.jpg
11/03/99	11:59a	480	dem3.jpg
11/03/99	11:59a	483	dem3b.jpg
11/03/99	11:59a	484	dem4.jpg
11/23/99	05:25p	419	demmod.jpg
11/09/99	01:43p	482	demtofobj.jpg
11/23/99	05:25p	423	detentiondlg3.jpg
11/22/99	01:56p	478	distancecontours.jpg
11/23/99	05:25p	423	editwindow.jpg
11/23/99	05:25p	409	emptyhelpstrip.jpg
11/23/99	05:25p	415	end.ht1.gif
11/24/99	03:13p	494	f0601basins.jpg
11/23/99	05:25p	423	F0601Dialog.jpg
11/23/99	05:25p	423	faspen03.jpg
11/23/99	05:25p	424	flood.jpg
11/09/99	01:49p	481	fobj.jpg
11/09/99	12:22p	481	fobject1.jpg
11/22/99	02:10p	505	geomparms.jpg
11/22/99	09:34a	477	HEC-1dialog.jpg
11/23/99	12:54p	477	HEC22Dialog.jpg
11/23/99	05:25p	422	helpstrip.jpg
11/23/99	05:25p	419	hspfbasins.jpg
11/23/99	05:25p	419	hspfedit.jpg
11/23/99	12:44p	480	HY8Dialog.jpg
11/23/99	05:25p	419	hydmodelmod.jpg
11/24/99	03:14p	496	hydro.jpg
11/24/99	03:14p	484	hydrotxt.jpg
11/23/99	12:17p	481	idf.jpg
11/03/99	12:02p	478	image.jpg
11/23/99	05:25p	418	index.1.gif
11/23/99	05:25p	418	index.2.gif
11/23/99	05:25p	421	layout.jpg
11/09/99	01:50p	482	luse.jpg
11/23/99	05:25p	411	lusecn.jpg
11/23/99	05:25p	418	macros.jpg
11/23/99	05:25p	419	mapmod.jpg
11/23/99	01:14p	480	maricopa-sgraph.jpg
11/22/99	01:37p	468	maricopatc.jpg
11/22/99	01:37p	468	maricopauh.jpg
11/24/99	03:13p	481	modratdlog.jpg
11/24/99	03:08p	949	next.gif
11/22/99	02:19p	475	Nffdialog.jpg
11/24/99	03:14p	492	nfftxt.jpg
11/24/99	03:08p	932	prev.gif
11/22/99	02:06p	480	rational.jpg
11/23/99	05:25p	411	rational_hydros.jpg
11/22/99	01:53p	478	reservoir.jpg
11/23/99	05:25p	419	scatpointmod.jpg
11/23/99	05:25p	412	screenshot.jpg
11/23/99	05:25p	421	snowmelt.jpg
11/23/99	05:25p	411	soilcn.jpg

61/53

```
11/22/99  09:15a                482 soiltypes.jpg
11/23/99  05:25p                421 storage-capacity.jpg
11/23/99  05:25p                411 tablecn.jpg
11/22/99  01:17p                484 tccalcparms.jpg
11/22/99  02:10p                505 tclagdlog.jpg
11/22/99  01:17p                484 tcmapcompdlog.jpg
11/22/99  09:06a                468 tcmapcompdlog2.jpg
11/22/99  01:43p                478 thiessen.jpg
11/23/99  05:25p                421 thiessen-weights.jpg
10/27/99  02:32p                184 thiessen-weights.tif
11/23/99  05:25p                420 timearea.jpg
11/03/99  01:11p                476 tin1.jpg
11/09/99  01:52p                492 tin2.jpg
11/09/99  01:52p                492 tin3.jpg
11/03/99  01:26p                477 tin4.jpg
11/03/99  01:27p                477 tin5.jpg
11/09/99  01:39p                477 tin6.jpg
11/03/99  12:04p                478 tinimage.jpg
11/23/99  05:25p                419 tinmod.jpg
11/23/99  05:25p                418 tools.jpg
11/23/99  05:25p                422 topofhelpstrip.jpg
11/22/99  02:01p                480 TR-20dialog.jpg
11/22/99  01:37p                468 TR-55Dialog.jpg
11/23/99  05:25p                411 tree-only.jpg
11/23/99  05:25p                424 vertopts.jpg
11/23/99  05:25p                420 WDMdataset.jpg
11/23/99  05:25p                420 wdmviewer.jpg
11/23/99  05:25p                423 wms01.jpg
11/23/99  12:11p                480 xsectcontours.jpg
11/23/99  12:11p                480 xsection.jpg
              97 File(s)       43,589 bytes

 Directory of E:\WMS\pc\wmstour\_borders

06/26/02  05:05p        <DIR>          .
06/26/02  05:05p        <DIR>          ..
09/02/99  11:45a                757 bottom.htm
11/23/99  04:47p                740 left.htm
11/23/99  04:47p                799 top.htm
06/26/02  05:05p        <DIR>          _vti_cnf
               6 File(s)        2,296 bytes

 Directory of E:\WMS\pc\wmstour\_borders\_vti_cnf

06/26/02  05:05p        <DIR>          .
06/26/02  05:05p        <DIR>          ..
09/02/99  11:46a                962 bottom.htm
11/23/99  04:47p              1,015 left.htm
11/23/99  04:47p              1,012 top.htm
               5 File(s)        2,989 bytes

 Directory of E:\WMS\pc\wmstour\_derived

06/26/02  05:05p        <DIR>          .
06/26/02  05:05p        <DIR>          ..
11/23/99  05:25p              7,360 channels2.htm_cmp_quicktourwms000_bnr.gif
11/23/99  05:25p              7,404 channels3.htm_cmp_quicktourwms000_bnr.gif
```

62/93

```
11/23/99  05:25p                 7,368 channels.htm_cmp_quicktourwms000_bnr.gif
11/23/99  05:25p                   661 channels.htm_cmp_quicktourwms000_vbtn.gif
11/23/99  05:25p                   661
channels.htm_cmp_quicktourwms000_vbtn_p.gif
11/23/99  05:25p                 7,415 CN.htm_cmp_quicktourwms000_bnr.gif
11/23/99  05:25p                   718 CN.htm_cmp_quicktourwms000_vbtn.gif
11/23/99  05:25p                   718 CN.htm_cmp_quicktourwms000_vbtn_p.gif
09/02/99  11:46a                 6,674 concmod.htm_cmp_quicktourwms000_bnr.gif
09/02/99  11:46a                   708 concmod.htm_cmp_quicktourwms000_vbtn.gif
09/02/99  11:46a                   708
concmod.htm_cmp_quicktourwms000_vbtn_p.gif
11/23/99  05:25p                 7,368 culverts.htm_cmp_quicktourwms000_bnr.gif
11/23/99  05:25p                   654 culverts.htm_cmp_quicktourwms000_vbtn.gif
11/23/99  05:25p                   654
culverts.htm_cmp_quicktourwms000_vbtn_p.gif
11/23/99  05:25p                 7,422 curbs.htm_cmp_quicktourwms000_bnr.gif
11/23/99  05:25p                   713 curbs.htm_cmp_quicktourwms000_vbtn.gif
11/23/99  05:25p                   713 curbs.htm_cmp_quicktourwms000_vbtn_p.gif
11/23/99  05:25p                 7,460
demdelineate.htm_cmp_quicktourwms000_bnr.gif
11/23/99  05:25p                 7,348 DEM.htm_cmp_quicktourwms000_bnr.gif
11/23/99  05:25p                   632 DEM.htm_cmp_quicktourwms000_vbtn.gif
11/23/99  05:25p                   632 DEM.htm_cmp_quicktourwms000_vbtn_p.gif
11/23/99  05:25p                 7,445 detbasin.htm_cmp_quicktourwms000_bnr.gif
11/23/99  05:25p                   745 detbasin.htm_cmp_quicktourwms000_vbtn.gif
11/23/99  05:25p                   745
detbasin.htm_cmp_quicktourwms000_vbtn_p.gif
11/23/99  05:25p                 7,416 draped.htm_cmp_quicktourwms000_bnr.gif
10/27/99  05:33p                   635 draped.htm_cmp_quicktourwms000_vbtn.gif
10/27/99  05:33p                   635 draped.htm_cmp_quicktourwms000_vbtn_p.gif
11/23/99  05:25p                 7,379 editstrip.htm_cmp_quicktourwms000_bnr.gif
11/23/99  05:25p                 7,355 end.htm_cmp_quicktourwms000_bnr.gif
11/23/99  05:25p                 7,437
findingdata.htm_cmp_quicktourwms000_bnr.gif
11/23/99  05:25p                   703
findingdata.htm_cmp_quicktourwms000_vbtn.gif
11/23/99  05:25p                   703
findingdata.htm_cmp_quicktourwms000_vbtn_p.gif
11/23/99  05:25p                 7,449 floaccum.htm_cmp_quicktourwms000_bnr.gif
11/23/99  05:25p                 7,416 flovec.htm_cmp_quicktourwms000_bnr.gif
11/29/99  01:52p                   928
GISVector.htm_cmp_quicktourwms000_vbtn_p.gif
11/29/99  01:52p                 7,267 GISVector.htm_cmp_quicktourwms000_bnr.gif
11/29/99  01:52p                   928
GISVector.htm_cmp_quicktourwms000_vbtn.gif
11/23/99  05:25p                 7,450
GISVector2.htm_cmp_quicktourwms000_bnr.gif
11/23/99  05:25p                 7,504
GISVector5.htm_cmp_quicktourwms000_bnr.gif
11/23/99  05:25p                 7,456
GISVector6.htm_cmp_quicktourwms000_bnr.gif
11/23/99  05:25p                 7,453
GISVector4.htm_cmp_quicktourwms000_bnr.gif
11/23/99  05:25p                 7,437
GISVector3.htm_cmp_quicktourwms000_bnr.gif
11/23/99  05:25p                 7,382 HEC-12.htm_cmp_quicktourwms000_bnr.gif
11/23/99  05:25p                 7,328 HEC-13.htm_cmp_quicktourwms000_bnr.gif
```

```
11/23/99  05:25p                 7,353 HEC-14.htm_cmp_quicktourwms000_bnr.gif
11/23/99  05:25p                 7,352 HEC-15.htm_cmp_quicktourwms000_bnr.gif
11/23/99  05:25p                 7,374 HEC-16.htm_cmp_quicktourwms000_bnr.gif
11/23/99  05:25p                 7,386 HEC-17.htm_cmp_quicktourwms000_bnr.gif
11/23/99  05:25p                 7,352 HEC-1.htm_cmp_quicktourwms000_bnr.gif
11/23/99  05:25p                   625 HEC-1.htm_cmp_quicktourwms000_vbtn.gif
11/23/99  05:25p                   625 HEC-1.htm_cmp_quicktourwms000_vbtn_p.gif
11/23/99  05:25p                 7,396 helpstrip.htm_cmp_quicktourwms000_bnr.gif
11/23/99  05:25p                   617 home_cmp_quicktourwms000_vbtn.gif
11/23/99  05:25p                   617 home_cmp_quicktourwms000_vbtn_p.gif
11/23/99  05:25p                 7,422 HSPF2.htm_cmp_quicktourwms000_bnr.gif
11/23/99  02:47p                   618 HSPF2.htm_cmp_quicktourwms000_vbtn.gif
11/23/99  02:47p                   618 HSPF2.htm_cmp_quicktourwms000_vbtn_p.gif
11/23/99  05:25p                 7,349 HSPF3.htm_cmp_quicktourwms000_bnr.gif
11/23/99  02:47p                   618 HSPF3.htm_cmp_quicktourwms000_vbtn.gif
11/23/99  02:47p                   618 HSPF3.htm_cmp_quicktourwms000_vbtn_p.gif
11/23/99  05:25p                 7,348 HSPF.htm_cmp_quicktourwms000_bnr.gif
11/23/99  05:25p                   618 HSPF.htm_cmp_quicktourwms000_vbtn.gif
11/23/99  05:25p                   618 HSPF.htm_cmp_quicktourwms000_vbtn_p.gif
11/23/99  05:25p                 7,350 images.htm_cmp_quicktourwms000_bnr.gif
11/23/99  05:25p                   635 images.htm_cmp_quicktourwms000_vbtn.gif
11/23/99  05:25p                   635 images.htm_cmp_quicktourwms000_vbtn_p.gif
11/23/99  05:25p                 7,405 index.html_cmp_quicktourwms000_bnr.gif
11/23/99  12:59p                   677
lacounty2.htm_cmp_quicktourwms000_vbtn_p.gif
11/23/99  05:25p                 7,382 lacounty2.htm_cmp_quicktourwms000_bnr.gif
11/23/99  12:59p                   677
lacounty2.htm_cmp_quicktourwms000_vbtn.gif
11/23/99  05:25p                 7,392 lacounty.htm_cmp_quicktourwms000_bnr.gif
11/23/99  05:25p                   677 lacounty.htm_cmp_quicktourwms000_vbtn.gif
11/23/99  05:25p                   677
lacounty.htm_cmp_quicktourwms000_vbtn_p.gif
11/23/99  05:25p                 7,356 layout.htm_cmp_quicktourwms000_bnr.gif
11/23/99  05:25p                   635 layout.htm_cmp_quicktourwms000_vbtn.gif
11/23/99  05:25p                   635 layout.htm_cmp_quicktourwms000_vbtn_p.gif
11/23/99  05:25p                 7,348 macros.htm_cmp_quicktourwms000_bnr.gif
11/23/99  05:25p                 7,466 maricopa.htm_cmp_quicktourwms000_bnr.gif
11/23/99  05:25p                   751 maricopa.htm_cmp_quicktourwms000_vbtn.gif
11/23/99  05:25p                   751
maricopa.htm_cmp_quicktourwms000_vbtn_p.gif
11/23/99  05:25p                 7,360 modules.htm_cmp_quicktourwms000_bnr.gif
11/23/99  05:25p                 7,324 NFF.htm_cmp_quicktourwms000_bnr.gif
11/23/99  05:25p                   600 NFF.htm_cmp_quicktourwms000_vbtn.gif
11/23/99  05:25p                   600 NFF.htm_cmp_quicktourwms000_vbtn_p.gif
11/23/99  05:25p                 7,492
outletpoint.htm_cmp_quicktourwms000_bnr.gif
11/23/99  05:25p                   734
postprocess.htm_cmp_quicktourwms000_vbtn_p.gif
11/24/99  03:09p                 7,489
postprocess2.htm_cmp_quicktourwms000_bnr.gif
11/24/99  03:08p                   677
postprocess2.htm_cmp_quicktourwms000_vbtn.gif
11/24/99  03:08p                   677
postprocess2.htm_cmp_quicktourwms000_vbtn_p.gif
11/23/99  05:25p                 7,460
postprocess.htm_cmp_quicktourwms000_bnr.gif
```

```
11/23/99  05:25p                734
postprocess.htm_cmp_quicktourwms000_vbtn.gif
11/23/99  05:25p              7,349 rational.htm_cmp_quicktourwms000_bnr.gif
11/23/99  05:25p                661 rational.htm_cmp_quicktourwms000_vbtn.gif
11/23/99  05:25p                661
rational.htm_cmp_quicktourwms000_vbtn_p.gif
11/23/99  05:25p              7,389 rational2.htm_cmp_quicktourwms000_bnr.gif
11/23/99  05:25p              7,368 support.htm_cmp_quicktourwms000_bnr.gif
11/23/99  05:25p                655 support.htm_cmp_quicktourwms000_vbtn.gif
11/23/99  05:25p                655
support.htm_cmp_quicktourwms000_vbtn_p.gif
11/23/99  05:25p              7,463 TINs2.htm_cmp_quicktourwms000_bnr.gif
11/23/99  05:25p              7,381 TINs3.htm_cmp_quicktourwms000_bnr.gif
11/23/99  05:25p              7,320 TINs4.htm_cmp_quicktourwms000_bnr.gif
11/23/99  05:25p              7,371 TINs5.htm_cmp_quicktourwms000_bnr.gif
11/23/99  05:25p              7,316 TINs.htm_cmp_quicktourwms000_bnr.gif
11/23/99  05:25p                606 TINs.htm_cmp_quicktourwms000_vbtn.gif
11/23/99  05:25p                606 TINs.htm_cmp_quicktourwms000_vbtn_p.gif
11/23/99  05:25p              7,320 tools.htm_cmp_quicktourwms000_bnr.gif
11/23/99  05:25p              7,416 TR-20-55.htm_cmp_quicktourwms000_bnr.gif
11/23/99  05:25p                704 TR-20-55.htm_cmp_quicktourwms000_vbtn.gif
11/23/99  05:25p                704 TR-20-
55.htm_cmp_quicktourwms000_vbtn_p.gif
11/23/99  05:25p              7,382 TR-202.htm_cmp_quicktourwms000_bnr.gif
11/23/99  05:25p              7,328 TR-203.htm_cmp_quicktourwms000_bnr.gif
11/23/99  05:25p              7,403
traveltimes.htm_cmp_quicktourwms000_bnr.gif
11/23/99  05:25p                688
traveltimes.htm_cmp_quicktourwms000_vbtn.gif
11/23/99  05:25p                688
traveltimes.htm_cmp_quicktourwms000_vbtn_p.gif
11/23/99  05:25p              7,569
traveltimes2.htm_cmp_quicktourwms000_bnr.gif
11/23/99  05:25p              7,397 WMSHydro.htm_cmp_quicktourwms000_bnr.gif
11/23/99  05:25p                705 WMSHydro.htm_cmp_quicktourwms000_vbtn.gif
11/23/99  05:25p                705
WMSHydro.htm_cmp_quicktourwms000_vbtn_p.gif
06/26/02  05:05p        <DIR>          _vti_cnf
             121 File(s)        482,117 bytes

 Directory of E:\WMS\pc\wmstour\_derived\_vti_cnf

06/26/02  05:05p        <DIR>          .
06/26/02  05:05p        <DIR>          ..
11/23/99  12:14p                325 channels2.htm_cmp_quicktourwms000_bnr.gif
11/23/99  12:18p                325 channels3.htm_cmp_quicktourwms000_bnr.gif
11/02/99  04:56p                325 channels.htm_cmp_quicktourwms000_bnr.gif
11/02/99  04:56p                325 channels.htm_cmp_quicktourwms000_vbtn.gif
11/02/99  04:56p                325
channels.htm_cmp_quicktourwms000_vbtn_p.gif
11/02/99  04:51p                325 CN.htm_cmp_quicktourwms000_bnr.gif
11/02/99  04:51p                325 CN.htm_cmp_quicktourwms000_vbtn.gif
11/02/99  04:51p                325 CN.htm_cmp_quicktourwms000_vbtn_p.gif
09/02/99  11:45a                304 concmod.htm_cmp_quicktourwms000_bnr.gif
09/02/99  11:45a                304 concmod.htm_cmp_quicktourwms000_vbtn.gif
09/02/99  11:45a                304
concmod.htm_cmp_quicktourwms000_vbtn_p.gif
```

```
11/02/99  04:47p                    325 culverts.htm_cmp_quicktourwms000_bnr.gif
11/02/99  04:47p                    325 culverts.htm_cmp_quicktourwms000_vbtn.gif
11/02/99  04:47p                    325
culverts.htm_cmp_quicktourwms000_vbtn_p.gif
11/02/99  04:58p                    325 curbs.htm_cmp_quicktourwms000_bnr.gif
11/02/99  04:58p                    325 curbs.htm_cmp_quicktourwms000_vbtn.gif
11/02/99  04:58p                    325 curbs.htm_cmp_quicktourwms000_vbtn_p.gif
11/01/99  11:47a                    304
demdelineate.htm_cmp_quicktourwms000_bnr.gif
10/27/99  05:44p                    304 DEM.htm_cmp_quicktourwms000_bnr.gif
10/27/99  05:44p                    304 DEM.htm_cmp_quicktourwms000_vbtn.gif
10/27/99  05:44p                    304 DEM.htm_cmp_quicktourwms000_vbtn_p.gif
11/02/99  04:56p                    325 detbasin.htm_cmp_quicktourwms000_bnr.gif
11/02/99  04:56p                    325 detbasin.htm_cmp_quicktourwms000_vbtn.gif
11/02/99  04:56p                    325
detbasin.htm_cmp_quicktourwms000_vbtn_p.gif
10/27/99  05:33p                    325 draped.htm_cmp_quicktourwms000_bnr.gif
10/27/99  05:33p                    325 draped.htm_cmp_quicktourwms000_vbtn.gif
10/27/99  05:33p                    325 draped.htm_cmp_quicktourwms000_vbtn_p.gif
09/02/99  11:45a                    304 editstrip.htm_cmp_quicktourwms000_bnr.gif
09/02/99  11:45a                    304 end.htm_cmp_quicktourwms000_bnr.gif
11/23/99  02:54p                    325
findingdata.htm_cmp_quicktourwms000_bnr.gif
11/23/99  02:54p                    325
findingdata.htm_cmp_quicktourwms000_vbtn.gif
11/23/99  02:54p                    325
findingdata.htm_cmp_quicktourwms000_vbtn_p.gif
11/01/99  11:41a                    304 floaccum.htm_cmp_quicktourwms000_bnr.gif
11/01/99  11:36a                    304 flovec.htm_cmp_quicktourwms000_bnr.gif
11/02/99  04:49p                    325
GISVector.htm_cmp_quicktourwms000_vbtn_p.gif
11/02/99  04:49p                    325 GISVector.htm_cmp_quicktourwms000_bnr.gif
11/02/99  04:49p                    325
GISVector.htm_cmp_quicktourwms000_vbtn.gif
11/09/99  12:23p                    325
GISVector2.htm_cmp_quicktourwms000_bnr.gif
11/09/99  01:45p                    325
GISVector5.htm_cmp_quicktourwms000_bnr.gif
11/09/99  01:45p                    325
GISVector6.htm_cmp_quicktourwms000_bnr.gif
11/09/99  01:44p                    325
GISVector4.htm_cmp_quicktourwms000_bnr.gif
11/09/99  01:39p                    325
GISVector3.htm_cmp_quicktourwms000_bnr.gif
11/22/99  01:12p                    325 HEC-12.htm_cmp_quicktourwms000_bnr.gif
11/22/99  01:19p                    325 HEC-13.htm_cmp_quicktourwms000_bnr.gif
11/22/99  01:21p                    325 HEC-14.htm_cmp_quicktourwms000_bnr.gif
11/22/99  01:41p                    325 HEC-15.htm_cmp_quicktourwms000_bnr.gif
11/22/99  01:44p                    325 HEC-16.htm_cmp_quicktourwms000_bnr.gif
11/22/99  01:54p                    325 HEC-17.htm_cmp_quicktourwms000_bnr.gif
11/02/99  04:52p                    325 HEC-1.htm_cmp_quicktourwms000_bnr.gif
11/02/99  04:52p                    325 HEC-1.htm_cmp_quicktourwms000_vbtn.gif
11/02/99  04:52p                    325 HEC-1.htm_cmp_quicktourwms000_vbtn_p.gif
09/02/99  11:45a                    304 helpstrip.htm_cmp_quicktourwms000_bnr.gif
09/02/99  11:45a                    304 home_cmp_quicktourwms000_vbtn.gif
09/02/99  11:45a                    304 home_cmp_quicktourwms000_vbtn_p.gif
11/23/99  02:47p                    325 HSPF2.htm_cmp_quicktourwms000_bnr.gif
```

```
11/23/99  02:47p                    325 HSPF2.htm_cmp_quicktourwms000_vbtn.gif
11/23/99  02:47p                    325 HSPF2.htm_cmp_quicktourwms000_vbtn_p.gif
11/23/99  02:47p                    325 HSPF3.htm_cmp_quicktourwms000_bnr.gif
11/23/99  02:47p                    325 HSPF3.htm_cmp_quicktourwms000_vbtn.gif
11/23/99  02:47p                    325 HSPF3.htm_cmp_quicktourwms000_vbtn_p.gif
11/02/99  04:55p                    325 HSPF.htm_cmp_quicktourwms000_bnr.gif
11/02/99  04:55p                    325 HSPF.htm_cmp_quicktourwms000_vbtn.gif
11/02/99  04:55p                    325 HSPF.htm_cmp_quicktourwms000_vbtn_p.gif
09/02/99  11:45a                    304 images.htm_cmp_quicktourwms000_bnr.gif
09/02/99  11:45a                    304 images.htm_cmp_quicktourwms000_vbtn.gif
09/02/99  11:45a                    304 images.htm_cmp_quicktourwms000_vbtn_p.gif
09/02/99  11:45a                    304 index.html_cmp_quicktourwms000_bnr.gif
11/23/99  01:00p                    325
lacounty2.htm_cmp_quicktourwms000_vbtn_p.gif
11/23/99  01:00p                    325 lacounty2.htm_cmp_quicktourwms000_bnr.gif
11/23/99  01:00p                    325
lacounty2.htm_cmp_quicktourwms000_vbtn.gif
11/02/99  04:58p                    325 lacounty.htm_cmp_quicktourwms000_bnr.gif
11/02/99  04:58p                    325 lacounty.htm_cmp_quicktourwms000_vbtn.gif
11/02/99  04:58p                    325
lacounty.htm_cmp_quicktourwms000_vbtn_p.gif
09/02/99  11:45a                    304 layout.htm_cmp_quicktourwms000_bnr.gif
09/02/99  11:45a                    304 layout.htm_cmp_quicktourwms000_vbtn.gif
09/02/99  11:45a                    304 layout.htm_cmp_quicktourwms000_vbtn_p.gif
09/02/99  11:45a                    304 macros.htm_cmp_quicktourwms000_bnr.gif
11/02/99  04:59p                    325 maricopa.htm_cmp_quicktourwms000_bnr.gif
11/02/99  04:59p                    325 maricopa.htm_cmp_quicktourwms000_vbtn.gif
11/02/99  04:59p                    325
maricopa.htm_cmp_quicktourwms000_vbtn_p.gif
09/02/99  11:46a                    304 modules.htm_cmp_quicktourwms000_bnr.gif
11/02/99  04:54p                    325 NFF.htm_cmp_quicktourwms000_bnr.gif
11/02/99  04:54p                    325 NFF.htm_cmp_quicktourwms000_vbtn.gif
11/02/99  04:54p                    325 NFF.htm_cmp_quicktourwms000_vbtn_p.gif
11/01/99  11:44a                    304
outletpoint.htm_cmp_quicktourwms000_bnr.gif
11/02/99  05:04p                    325
postprocess.htm_cmp_quicktourwms000_vbtn_p.gif
11/24/99  03:08p                    325
postprocess2.htm_cmp_quicktourwms000_bnr.gif
11/24/99  03:08p                    325
postprocess2.htm_cmp_quicktourwms000_vbtn.gif
11/24/99  03:08p                    325
postprocess2.htm_cmp_quicktourwms000_vbtn_p.gif
11/02/99  05:04p                    325
postprocess.htm_cmp_quicktourwms000_bnr.gif
11/02/99  05:04p                    325
postprocess.htm_cmp_quicktourwms000_vbtn.gif
11/02/99  04:53p                    325 rational.htm_cmp_quicktourwms000_bnr.gif
11/02/99  04:53p                    325 rational.htm_cmp_quicktourwms000_vbtn.gif
11/02/99  04:53p                    325
rational.htm_cmp_quicktourwms000_vbtn_p.gif
11/22/99  02:06p                    325 rational2.htm_cmp_quicktourwms000_bnr.gif
09/02/99  11:46a                    304 support.htm_cmp_quicktourwms000_bnr.gif
09/02/99  11:45a                    304 support.htm_cmp_quicktourwms000_vbtn.gif
09/02/99  11:46a                    304
support.htm_cmp_quicktourwms000_vbtn_p.gif
11/03/99  01:11p                    325 TINs2.htm_cmp_quicktourwms000_bnr.gif
```

```
11/03/99  01:22p                    325 TINs3.htm_cmp_quicktourwms000_bnr.gif
11/03/99  01:26p                    325 TINs4.htm_cmp_quicktourwms000_bnr.gif
11/03/99  01:26p                    325 TINs5.htm_cmp_quicktourwms000_bnr.gif
11/01/99  12:59p                    304 TINs.htm_cmp_quicktourwms000_bnr.gif
11/01/99  12:59p                    304 TINs.htm_cmp_quicktourwms000_vbtn.gif
11/01/99  12:59p                    304 TINs.htm_cmp_quicktourwms000_vbtn_p.gif
09/02/99  11:46a                    304 tools.htm_cmp_quicktourwms000_bnr.gif
11/02/99  04:53p                    325 TR-20-55.htm_cmp_quicktourwms000_bnr.gif
11/02/99  04:53p                    325 TR-20-55.htm_cmp_quicktourwms000_vbtn.gif
11/02/99  04:53p                    325 TR-20-
55.htm_cmp_quicktourwms000_vbtn_p.gif
11/22/99  02:02p                    325 TR-202.htm_cmp_quicktourwms000_bnr.gif
11/22/99  02:04p                    325 TR-203.htm_cmp_quicktourwms000_bnr.gif
11/02/99  04:50p                    325
traveltimes.htm_cmp_quicktourwms000_bnr.gif
11/02/99  04:50p                    325
traveltimes.htm_cmp_quicktourwms000_vbtn.gif
11/02/99  04:50p                    325
traveltimes.htm_cmp_quicktourwms000_vbtn_p.gif
11/22/99  08:44a                    325
traveltimes2.htm_cmp_quicktourwms000_bnr.gif
11/02/99  05:04p                    325 WMSHydro.htm_cmp_quicktourwms000_bnr.gif
11/02/99  05:04p                    325 WMSHydro.htm_cmp_quicktourwms000_vbtn.gif
11/02/99  05:04p                    325
WMSHydro.htm_cmp_quicktourwms000_vbtn_p.gif
             120 File(s)         37,699 bytes

 Directory of E:\WMS\pc\wmstour\_overlay

06/26/02  05:05p        <DIR>          .
06/26/02  05:05p        <DIR>          ..
11/23/99  05:25p                    112 channels.htm_nav_quicktourwms000_bnr.gif
11/23/99  05:25p                    180 channels.htm_nav_quicktourwms000_vbtn.gif
11/23/99  05:25p                    123 channels2.htm_nav_quicktourwms000_bnr.gif
11/23/99  05:25p                    132 channels3.htm_nav_quicktourwms000_bnr.gif
11/23/99  05:25p                    154 CN.htm_nav_quicktourwms000_bnr.gif
11/23/99  05:25p                    254 CN.htm_nav_quicktourwms000_vbtn.gif
11/23/99  05:25p                    111 culverts.htm_nav_quicktourwms000_bnr.gif
11/23/99  05:25p                    169 culverts.htm_nav_quicktourwms000_vbtn.gif
11/23/99  05:25p                    146 curbs.htm_nav_quicktourwms000_bnr.gif
11/23/99  05:25p                    238 curbs.htm_nav_quicktourwms000_vbtn.gif
11/23/99  05:25p                    167
demdelineate.htm_nav_quicktourwms000_bnr.gif
11/23/99  05:25p                     96 DEM.htm_nav_quicktourwms000_bnr.gif
11/23/99  05:25p                    142 DEM.htm_nav_quicktourwms000_vbtn.gif
11/23/99  05:25p                    165 detbasin.htm_nav_quicktourwms000_bnr.gif
11/23/99  05:25p                    271 detbasin.htm_nav_quicktourwms000_vbtn.gif
11/23/99  05:25p                    148 draped.htm_nav_quicktourwms000_bnr.gif
11/23/99  05:25p                    119 editstrip.htm_nav_quicktourwms000_bnr.gif
11/23/99  05:25p                    107 end.htm_nav_quicktourwms000_bnr.gif
11/23/99  05:25p                    139
findingdata.htm_nav_quicktourwms000_bnr.gif
11/23/99  05:25p                    232
findingdata.htm_nav_quicktourwms000_vbtn.gif
11/23/99  05:25p                    182 floaccum.htm_nav_quicktourwms000_bnr.gif
11/23/99  05:25p                    154 flovec.htm_nav_quicktourwms000_bnr.gif
```

68/93

```
11/23/99  05:25p                    189
GISVector5.htm_nav_quicktourwms000_bnr.gif
11/23/99  05:25p                    155
GISVector6.htm_nav_quicktourwms000_bnr.gif
11/23/99  05:25p                    162
GISVector2.htm_nav_quicktourwms000_bnr.gif
11/23/99  05:25p                    151
GISVector3.htm_nav_quicktourwms000_bnr.gif
11/23/99  05:25p                    168
GISVector4.htm_nav_quicktourwms000_bnr.gif
11/23/99  05:25p                    121 HEC-12.htm_nav_quicktourwms000_bnr.gif
11/23/99  05:25p                     80 HEC-13.htm_nav_quicktourwms000_bnr.gif
11/23/99  05:25p                    112 HEC-14.htm_nav_quicktourwms000_bnr.gif
11/23/99  05:25p                    126 HEC-15.htm_nav_quicktourwms000_bnr.gif
11/23/99  05:25p                    119 HEC-16.htm_nav_quicktourwms000_bnr.gif
11/23/99  05:25p                    119 HEC-17.htm_nav_quicktourwms000_bnr.gif
11/23/99  05:25p                     94 HEC-1.htm_nav_quicktourwms000_bnr.gif
11/23/99  05:25p                    139 HEC-1.htm_nav_quicktourwms000_vbtn.gif
11/23/99  05:25p                    124 helpstrip.htm_nav_quicktourwms000_bnr.gif
11/23/99  05:25p                    134 home_nav_quicktourwms000_vbtn.gif
11/23/99  05:25p                    148 HSPF2.htm_nav_quicktourwms000_bnr.gif
11/23/99  05:25p                     90 HSPF3.htm_nav_quicktourwms000_bnr.gif
11/23/99  05:25p                     91 HSPF.htm_nav_quicktourwms000_bnr.gif
11/23/99  05:25p                    136 HSPF.htm_nav_quicktourwms000_vbtn.gif
11/23/99  05:25p                    105 images.htm_nav_quicktourwms000_bnr.gif
11/23/99  05:25p                    154 images.htm_nav_quicktourwms000_vbtn.gif
11/23/99  05:25p                    131 index.html_nav_quicktourwms000_bnr.gif
11/23/99  05:25p                    122 lacounty.htm_nav_quicktourwms000_bnr.gif
11/23/99  05:25p                    199 lacounty.htm_nav_quicktourwms000_vbtn.gif
11/23/99  05:25p                    119 lacounty2.htm_nav_quicktourwms000_bnr.gif
11/23/99  05:25p                     99 layout.htm_nav_quicktourwms000_bnr.gif
11/23/99  05:25p                    152 layout.htm_nav_quicktourwms000_vbtn.gif
11/23/99  05:25p                    104 macros.htm_nav_quicktourwms000_bnr.gif
11/23/99  05:25p                    163 maricopa.htm_nav_quicktourwms000_bnr.gif
11/23/99  05:25p                    284 maricopa.htm_nav_quicktourwms000_vbtn.gif
11/23/99  05:25p                    112 modules.htm_nav_quicktourwms000_bnr.gif
11/23/99  05:25p                     80 NFF.htm_nav_quicktourwms000_bnr.gif
11/23/99  05:25p                    112 NFF.htm_nav_quicktourwms000_vbtn.gif
11/23/99  05:25p                    173
outletpoint.htm_nav_quicktourwms000_bnr.gif
11/23/99  05:25p                    157
postprocess.htm_nav_quicktourwms000_bnr.gif
11/23/99  05:25p                    264
postprocess.htm_nav_quicktourwms000_vbtn.gif
11/24/99  03:09p                    171
postprocess2.htm_nav_quicktourwms000_bnr.gif
11/23/99  05:25p                    109 rational.htm_nav_quicktourwms000_bnr.gif
11/23/99  05:25p                    171 rational.htm_nav_quicktourwms000_vbtn.gif
11/23/99  05:25p                    126 rational2.htm_nav_quicktourwms000_bnr.gif
11/23/99  05:25p                    110 support.htm_nav_quicktourwms000_bnr.gif
11/23/99  05:25p                    171 support.htm_nav_quicktourwms000_vbtn.gif
11/23/99  05:25p                    174 TINs2.htm_nav_quicktourwms000_bnr.gif
11/23/99  05:25p                    124 TINs3.htm_nav_quicktourwms000_bnr.gif
11/23/99  05:25p                     95 TINs4.htm_nav_quicktourwms000_bnr.gif
11/23/99  05:25p                    118 TINs5.htm_nav_quicktourwms000_bnr.gif
11/23/99  05:25p                     83 TINs.htm_nav_quicktourwms000_bnr.gif
11/23/99  05:25p                    122 TINs.htm_nav_quicktourwms000_vbtn.gif
```

69/93

```
11/23/99  05:25p                    88 tools.htm_nav_quicktourwms000_bnr.gif
11/23/99  05:25p                   136 TR-20-55.htm_nav_quicktourwms000_bnr.gif
11/23/99  05:25p                   229 TR-20-55.htm_nav_quicktourwms000_vbtn.gif
11/23/99  05:25p                   121 TR-202.htm_nav_quicktourwms000_bnr.gif
11/23/99  05:25p                    80 TR-203.htm_nav_quicktourwms000_bnr.gif
11/23/99  05:25p                   134
traveltimes.htm_nav_quicktourwms000_bnr.gif
11/23/99  05:25p                   217
traveltimes.htm_nav_quicktourwms000_vbtn.gif
11/23/99  05:25p                   232
traveltimes2.htm_nav_quicktourwms000_bnr.gif
11/23/99  05:25p                   134 WMSHydro.htm_nav_quicktourwms000_bnr.gif
11/23/99  05:25p                   222 WMSHydro.htm_nav_quicktourwms000_vbtn.gif
12/15/99  06:01p                14,604 WS_FTP.LOG
06/26/02  05:05p        <DIR>          _vti_cnf
              84 File(s)         26,300 bytes

 Directory of E:\WMS\pc\wmstour\_overlay\_vti_cnf

06/26/02  05:05p        <DIR>          .
06/26/02  05:05p        <DIR>          ..
09/02/99  11:47a                   418 boreholes.htm_nav_quicktourwms000_bnr.gif
09/02/99  11:46a                   418 calibflux.htm_nav_quicktourwms000_bnr.gif
09/02/99  11:47a                   418 calibtarg.htm_nav_quicktourwms000_bnr.gif
09/02/99  11:47a                   417 calibtut.htm_nav_quicktourwms000_bnr.gif
11/23/99  05:26p                   417 channels.htm_nav_quicktourwms000_bnr.gif
11/23/99  05:26p                   417 channels.htm_nav_quicktourwms000_vbtn.gif
11/23/99  05:26p                   418 channels2.htm_nav_quicktourwms000_bnr.gif
11/23/99  05:26p                   418 channels3.htm_nav_quicktourwms000_bnr.gif
11/23/99  05:26p                   411 CN.htm_nav_quicktourwms000_bnr.gif
11/23/99  05:26p                   411 CN.htm_nav_quicktourwms000_vbtn.gif
09/02/99  11:46a                   416 concmod.htm_nav_quicktourwms000_bnr.gif
09/02/99  11:46a                   416 concmod.htm_nav_quicktourwms000_vbtn.gif
11/23/99  05:26p                   417 culverts.htm_nav_quicktourwms000_bnr.gif
11/23/99  05:26p                   417 culverts.htm_nav_quicktourwms000_vbtn.gif
11/23/99  05:26p                   414 curbs.htm_nav_quicktourwms000_bnr.gif
11/23/99  05:26p                   414 curbs.htm_nav_quicktourwms000_vbtn.gif
09/02/99  11:46a                   417 datacalc.htm_nav_quicktourwms000_bnr.gif
11/23/99  05:26p                   421
demdelineate.htm_nav_quicktourwms000_bnr.gif
11/23/99  05:26p                   411 DEM.htm_nav_quicktourwms000_bnr.gif
11/23/99  05:26p                   412 DEM.htm_nav_quicktourwms000_vbtn.gif
11/23/99  05:26p                   417 detbasin.htm_nav_quicktourwms000_bnr.gif
11/23/99  05:26p                   417 detbasin.htm_nav_quicktourwms000_vbtn.gif
11/23/99  05:26p                   415 draped.htm_nav_quicktourwms000_bnr.gif
10/27/99  05:33p                   415 draped.htm_nav_quicktourwms000_vbtn.gif
11/23/99  05:26p                   418 editstrip.htm_nav_quicktourwms000_bnr.gif
11/23/99  05:26p                   412 end.htm_nav_quicktourwms000_bnr.gif
09/02/99  11:46a                   418 femwater2.htm_nav_quicktourwms000_bnr.gif
09/02/99  11:47a                   416 femwtut.htm_nav_quicktourwms000_bnr.gif
11/23/99  05:26p                   420
findingdata.htm_nav_quicktourwms000_bnr.gif
11/23/99  05:26p                   420
findingdata.htm_nav_quicktourwms000_vbtn.gif
11/23/99  05:26p                   417 floaccum.htm_nav_quicktourwms000_bnr.gif
11/23/99  05:26p                   415 flovec.htm_nav_quicktourwms000_bnr.gif
09/02/99  11:46a                   415 geos2d.htm_nav_quicktourwms000_bnr.gif
```

```
09/02/99  11:47a                    415 geos3d.htm_nav_quicktourwms000_bnr.gif
09/02/99  11:46a                    416 geostut.htm_nav_quicktourwms000_bnr.gif
11/23/99  05:26p                    419
GISVector3.htm_nav_quicktourwms000_bnr.gif
11/23/99  05:26p                    419
GISVector2.htm_nav_quicktourwms000_bnr.gif
11/23/99  05:26p                    418
GISVector.htm_nav_quicktourwms000_vbtn.gif
11/23/99  05:26p                    419
GISVector5.htm_nav_quicktourwms000_bnr.gif
11/23/99  05:26p                    419
GISVector6.htm_nav_quicktourwms000_bnr.gif
11/23/99  05:26p                    419
GISVector4.htm_nav_quicktourwms000_bnr.gif
11/23/99  05:26p                    418 GISVector.htm_nav_quicktourwms000_bnr.gif
09/02/99  11:47a                    421
gridxsection.htm_nav_quicktourwms000_bnr.gif
11/23/99  05:26p                    415 HEC-12.htm_nav_quicktourwms000_bnr.gif
11/23/99  05:26p                    414 HEC-13.htm_nav_quicktourwms000_bnr.gif
11/23/99  05:26p                    415 HEC-14.htm_nav_quicktourwms000_bnr.gif
11/23/99  05:26p                    415 HEC-15.htm_nav_quicktourwms000_bnr.gif
11/23/99  05:26p                    415 HEC-16.htm_nav_quicktourwms000_bnr.gif
11/23/99  05:26p                    415 HEC-17.htm_nav_quicktourwms000_bnr.gif
11/23/99  05:26p                    413 HEC-1.htm_nav_quicktourwms000_bnr.gif
11/23/99  05:26p                    414 HEC-1.htm_nav_quicktourwms000_vbtn.gif
11/23/99  05:26p                    418 helpstrip.htm_nav_quicktourwms000_bnr.gif
11/23/99  05:26p                    409 home_nav_quicktourwms000_vbtn.gif
11/23/99  05:26p                    414 HSPF2.htm_nav_quicktourwms000_bnr.gif
11/23/99  02:47p                    470 HSPF2.htm_nav_quicktourwms000_vbtn.gif
11/23/99  05:26p                    413 HSPF3.htm_nav_quicktourwms000_bnr.gif
11/23/99  02:47p                    470 HSPF3.htm_nav_quicktourwms000_vbtn.gif
11/23/99  05:26p                    412 HSPF.htm_nav_quicktourwms000_bnr.gif
11/23/99  05:26p                    413 HSPF.htm_nav_quicktourwms000_vbtn.gif
11/23/99  05:26p                    415 images.htm_nav_quicktourwms000_bnr.gif
11/23/99  05:26p                    415 images.htm_nav_quicktourwms000_vbtn.gif
11/23/99  05:26p                    415 index.html_nav_quicktourwms000_bnr.gif
11/23/99  05:26p                    417 lacounty.htm_nav_quicktourwms000_bnr.gif
11/23/99  05:26p                    417 lacounty.htm_nav_quicktourwms000_vbtn.gif
11/23/99  05:26p                    418 lacounty2.htm_nav_quicktourwms000_bnr.gif
11/23/99  01:00p                    475
lacounty2.htm_nav_quicktourwms000_vbtn.gif
11/23/99  05:26p                    414 layout.htm_nav_quicktourwms000_bnr.gif
11/23/99  05:26p                    415 layout.htm_nav_quicktourwms000_vbtn.gif
11/23/99  05:26p                    415 macros.htm_nav_quicktourwms000_bnr.gif
11/23/99  05:26p                    417 maricopa.htm_nav_quicktourwms000_bnr.gif
11/23/99  05:26p                    417 maricopa.htm_nav_quicktourwms000_vbtn.gif
09/02/99  11:46a                    416 modftut.htm_nav_quicktourwms000_bnr.gif
09/02/99  11:46a                    416 modpath.htm_nav_quicktourwms000_bnr.gif
09/02/99  11:46a                    416 modpath.htm_nav_quicktourwms000_vbtn.gif
09/02/99  11:46a                    420
modpathcapt.htm_nav_quicktourwms000_bnr.gif
09/02/99  11:47a                    416 modptut.htm_nav_quicktourwms000_bnr.gif
11/23/99  05:26p                    416 modules.htm_nav_quicktourwms000_bnr.gif
09/02/99  11:47a                    420
mt3dmsplume.htm_nav_quicktourwms000_bnr.gif
09/02/99  11:47a                    418 mt3dmstut.htm_nav_quicktourwms000_bnr.gif
11/23/99  05:26p                    411 NFF.htm_nav_quicktourwms000_bnr.gif
```

71/93

```
11/23/99  05:26p                    412 NFF.htm_nav_quicktourwms000_vbtn.gif
11/23/99  05:26p                    420
outletpoint.htm_nav_quicktourwms000_bnr.gif
11/23/99  05:26p                    420
postprocess.htm_nav_quicktourwms000_bnr.gif
11/23/99  05:26p                    420
postprocess.htm_nav_quicktourwms000_vbtn.gif
11/24/99  03:09p                    478
postprocess2.htm_nav_quicktourwms000_bnr.gif
11/23/99  05:26p                    417 rational.htm_nav_quicktourwms000_bnr.gif
11/23/99  05:26p                    417 rational.htm_nav_quicktourwms000_vbtn.gif
11/23/99  05:26p                    418 rational2.htm_nav_quicktourwms000_bnr.gif
09/02/99  11:46a                    414 rt3d2.htm_nav_quicktourwms000_bnr.gif
09/02/99  11:46a                    416 rt3dtut.htm_nav_quicktourwms000_bnr.gif
09/02/99  11:46a                    416 seam3d2.htm_nav_quicktourwms000_bnr.gif
09/02/99  11:47a                    418 seam3dtut.htm_nav_quicktourwms000_bnr.gif
09/02/99  11:46a                    416 seep2d2.htm_nav_quicktourwms000_bnr.gif
09/02/99  11:47a                    418 seep2dtut.htm_nav_quicktourwms000_bnr.gif
09/02/99  11:47a                    414 solids.htm_nav_quicktourwms000_bnr.gif
09/02/99  11:47a                    419
stratigtut.htm_nav_quicktourwms000_bnr.gif
11/23/99  05:26p                    416 support.htm_nav_quicktourwms000_bnr.gif
11/23/99  05:26p                    416 support.htm_nav_quicktourwms000_vbtn.gif
11/23/99  05:26p                    414 TINs2.htm_nav_quicktourwms000_bnr.gif
11/23/99  05:26p                    414 TINs3.htm_nav_quicktourwms000_bnr.gif
11/23/99  05:26p                    413 TINs4.htm_nav_quicktourwms000_bnr.gif
11/23/99  05:26p                    414 TINs5.htm_nav_quicktourwms000_bnr.gif
11/23/99  05:26p                    412 TINs.htm_nav_quicktourwms000_bnr.gif
11/23/99  05:26p                    413 TINs.htm_nav_quicktourwms000_vbtn.gif
11/23/99  05:26p                    413 tools.htm_nav_quicktourwms000_bnr.gif
11/23/99  05:26p                    417 TR-20-55.htm_nav_quicktourwms000_bnr.gif
11/23/99  05:26p                    417 TR-20-55.htm_nav_quicktourwms000_vbtn.gif
11/23/99  05:26p                    415 TR-202.htm_nav_quicktourwms000_bnr.gif
11/23/99  05:26p                    414 TR-203.htm_nav_quicktourwms000_bnr.gif
11/23/99  05:26p                    420
traveltimes.htm_nav_quicktourwms000_bnr.gif
11/23/99  05:26p                    420
traveltimes.htm_nav_quicktourwms000_vbtn.gif
11/23/99  05:26p                    421
traveltimes2.htm_nav_quicktourwms000_bnr.gif
09/02/99  11:46a                    418 truelayer.htm_nav_quicktourwms000_bnr.gif
09/02/99  11:46a                    421
truelayerobl.htm_nav_quicktourwms000_bnr.gif
11/23/99  05:26p                    417 WMSHydro.htm_nav_quicktourwms000_bnr.gif
11/23/99  05:26p                    417 WMSHydro.htm_nav_quicktourwms000_vbtn.gif
09/02/99  11:47a                    418 xsections.htm_nav_quicktourwms000_bnr.gif
             119 File(s)         48,923 bytes

 Directory of E:\WMS\pc\wmstour\_themes

06/26/02  05:05p        <DIR>          .
06/26/02  05:05p        <DIR>          ..
06/26/02  05:05p        <DIR>          quicktourwms
08/31/99  03:51p                 7,328 themes.inf
06/26/02  05:05p        <DIR>          _vti_cnf
               5 File(s)          7,328 bytes
```

```
 Directory of E:\WMS\pc\wmstour\_themes\quicktourwms

06/26/02  05:05p        <DIR>          .
06/26/02  05:05p        <DIR>          ..
09/02/99  11:45a                 1,081 back.gif
09/02/99  11:45a                 1,024 background.gif
09/02/99  11:45a                 6,646 banner.gif
11/23/99  05:25p                 7,267 banner_wms.gif
09/02/99  11:45a                    79 blbull1.gif
09/02/99  11:45a                    62 blbull2.gif
09/02/99  11:45a                    60 blbull3.gif
09/02/99  11:45a                   132 blglb.gif
09/02/99  11:45a                   333 blhbh.gif
09/02/99  11:45a                   333 blhbp.gif
09/02/99  11:45a                   333 blhbs.gif
09/02/99  11:45a                   140 blhome.gif
09/02/99  11:45a                   161 blhomeh.gif
09/02/99  11:45a                   161 blhomep.gif
09/02/99  11:45a                   161 blhomes.gif
09/02/99  11:45a                   144 blnext.gif
09/02/99  11:45a                   165 blnexth.gif
09/02/99  11:45a                   165 blnextp.gif
09/02/99  11:45a                   165 blnexts.gif
09/02/99  11:45a                   292 blphb.gif
09/02/99  11:45a                   292 blphbp.gif
09/02/99  11:45a                   141 blprev.gif
09/02/99  11:45a                   164 blprevh.gif
09/02/99  11:45a                   164 blprevp.gif
09/02/99  11:45a                   164 blprevs.gif
09/02/99  11:45a                   126 blrule.gif
09/02/99  11:45a                   137 blup.gif
09/02/99  11:45a                   162 bluph.gif
09/02/99  11:45a                   162 blupp.gif
09/02/99  11:45a                   162 blups.gif
09/02/99  11:45a                   829 bullet1.gif
09/02/99  11:45a                   814 bullet2.gif
09/02/99  11:45a                   906 bullet3.gif
09/02/99  11:45a                   928 button1.gif
09/02/99  11:45a                 1,003 button1a.gif
09/02/99  11:45a                   928 button2.gif
09/02/99  11:45a                   989 button2a.gif
09/02/99  11:45a                 1,177 button3.gif
09/02/99  11:45a                   989 button3a.gif
09/02/99  11:45a                   637 color0.css
09/02/99  11:45a                   652 color1.css
09/02/99  11:45a                 7,048 custom.css
09/02/99  11:45a                 2,289 graph0.css
09/02/99  11:45a                 2,305 graph1.css
09/02/99  11:45a                 1,220 horizline.gif
09/02/99  11:45a                 1,267 prev.gif
11/23/99  05:24p                   124 quicktourwms.inf
11/23/99  05:24p                   124 quicktourwms.utf8
09/02/99  11:45a                   703 theme.css
06/26/02  05:05p        <DIR>          _vti_cnf
              52 File(s)        45,510 bytes

 Directory of E:\WMS\pc\wmstour\_themes\quicktourwms\_vti_cnf
```

73/93

```
06/26/02  05:05p        <DIR>          .
06/26/02  05:05p        <DIR>          ..
11/23/99  05:24p                   254 back.gif
11/23/99  05:24p                   254 background.gif
11/23/99  05:24p                   254 banner.gif
11/23/99  05:25p                   254 banner_wms.gif
11/23/99  05:24p                   254 blbull1.gif
11/23/99  05:24p                   254 blbull2.gif
11/23/99  05:24p                   254 blbull3.gif
11/23/99  05:24p                   254 blglb.gif
11/23/99  05:24p                   254 blhbh.gif
11/23/99  05:24p                   254 blhbp.gif
11/23/99  05:24p                   254 blhbs.gif
11/23/99  05:24p                   254 blhome.gif
11/23/99  05:24p                   254 blhomeh.gif
11/23/99  05:24p                   254 blhomep.gif
11/23/99  05:24p                   254 blhomes.gif
11/23/99  05:24p                   254 blnext.gif
11/23/99  05:24p                   254 blnexth.gif
11/23/99  05:25p                   254 blnextp.gif
11/23/99  05:25p                   254 blnexts.gif
11/23/99  05:25p                   254 blphb.gif
11/23/99  05:25p                   254 blphbp.gif
11/23/99  05:25p                   254 blprev.gif
11/23/99  05:25p                   254 blprevh.gif
11/23/99  05:25p                   254 blprevp.gif
11/23/99  05:25p                   254 blprevs.gif
11/23/99  05:25p                   254 blrule.gif
11/23/99  05:25p                   254 blup.gif
11/23/99  05:25p                   254 bluph.gif
11/23/99  05:25p                   254 blupp.gif
11/23/99  05:25p                   254 blups.gif
11/23/99  05:25p                   254 bullet1.gif
11/23/99  05:25p                   254 bullet2.gif
11/23/99  05:25p                   254 bullet3.gif
11/23/99  05:25p                   254 button1.gif
11/23/99  05:25p                   254 button1a.gif
11/23/99  05:25p                   254 button2.gif
11/23/99  05:25p                   254 button2a.gif
11/23/99  05:25p                   254 button3.gif
11/23/99  05:25p                   254 button3a.gif
11/23/99  05:25p                   254 color0.css
11/23/99  05:25p                   254 color1.css
11/23/99  05:25p                   254 custom.css
11/23/99  05:25p                   254 graph0.css
11/23/99  05:25p                   254 graph1.css
11/23/99  05:25p                   254 horizline.gif
11/23/99  05:25p                   254 prev.gif
11/23/99  05:24p                   254 quicktourwms.inf
11/23/99  05:24p                   254 quicktourwms.utf8
11/23/99  05:25p                   254 theme.css
              51 File(s)        12,446 bytes

 Directory of E:\WMS\pc\wmstour\_themes\_vti_cnf

06/26/02  05:05p        <DIR>          .
```

74/53

```
06/26/02  05:05p        <DIR>          ..
08/31/99  03:51p                     318 themes.inf
               3 File(s)              318 bytes

 Directory of E:\WMS\pc\wmstour\_vti_cnf

06/26/02  05:05p        <DIR>          .
06/26/02  05:05p        <DIR>          ..
03/28/00  01:04p                   1,549 channels.htm
12/01/99  01:36p                   1,224 channels2.htm
12/01/99  01:36p                   1,212 channels3.htm
03/28/00  01:05p                   1,452 CN.htm
11/23/99  04:35p                   1,515 concmod.htm
03/28/00  01:06p                   1,530 culverts.htm
12/01/99  01:36p                   1,525 curbs.htm
12/01/99  01:36p                   1,440 DEM.htm
12/01/99  01:36p                   1,210 demdelineate.htm
03/28/00  01:07p                   1,531 detbasin.htm
03/28/00  01:08p                   1,411 draped.htm
03/28/00  01:08p                   1,290 editstrip.htm
12/01/99  01:36p                   1,216 end.htm
12/01/99  01:36p                   1,488 findingdata.htm
12/01/99  01:36p                   1,208 floaccum.htm
12/01/99  01:36p                   1,186 flovec.htm
12/01/99  01:36p                   1,260 GISVector3.htm
12/01/99  01:36p                   1,221 GISVector4.htm
12/01/99  01:36p                   1,221 GISVector5.htm
12/01/99  01:36p                   1,234 GISVector6.htm
03/28/00  01:10p                   1,491 GISVector.htm
12/01/99  01:36p                   1,228 GISVector2.htm
03/28/00  01:11p                   1,509 HEC-1.htm
12/01/99  01:36p                   1,245 HEC-12.htm
12/01/99  01:36p                   1,187 HEC-13.htm
12/01/99  01:36p                   1,260 HEC-14.htm
12/01/99  01:36p                   1,262 HEC-15.htm
12/01/99  01:36p                   1,260 HEC-16.htm
12/01/99  01:36p                   1,258 HEC-17.htm
03/28/00  01:13p                   1,394 helpstrip.htm
03/28/00  01:13p                   1,496 HSPF.htm
03/28/00  01:13p                   1,506 HSPF2.htm
03/28/00  01:14p                   1,471 HSPF3.htm
03/28/00  01:15p                   1,435 images.htm
12/01/99  01:36p                   1,315 index.html
12/01/99  01:36p                   1,542 lacounty.htm
12/01/99  01:36p                   1,551 lacounty2.htm
12/01/99  01:36p                   1,419 layout.htm
03/28/00  01:17p                   1,273 macros.htm
12/01/99  01:36p                   1,575 maricopa.htm
12/01/99  01:36p                   1,560 modules.htm
12/01/99  01:36p                   1,500 NFF.htm
12/01/99  01:36p                   1,225 outletpoint.htm
12/01/99  01:36p                   1,581 postprocess.htm
12/01/99  01:36p                   1,493 postprocess2.htm
03/28/00  01:18p                   1,486 rational.htm
12/01/99  01:36p                   1,190 rational2.htm
12/01/99  01:36p                   1,384 support.htm
03/28/00  01:20p                   1,343 TINs.htm
```

```
12/01/99  01:36p                1,178 TINs2.htm
12/01/99  01:36p                1,220 TINs3.htm
12/01/99  01:36p                1,181 TINs4.htm
12/01/99  01:36p                1,193 TINs5.htm
12/01/99  01:36p                1,266 tools.htm
12/01/99  01:36p                1,536 TR-20-55.htm
12/01/99  01:36p                1,254 TR-202.htm
12/01/99  01:36p                1,193 TR-203.htm
03/28/00  01:22p                1,573 traveltimes.htm
12/01/99  01:36p                1,275 traveltimes2.htm
12/01/99  01:36p                1,599 WMSHydro.htm
              62 File(s)       81,830 bytes

 Directory of E:\WMS\pc\wmstour\_vti_pvt

06/26/02  05:05p        <DIR>          .
06/26/02  05:05p        <DIR>          ..
08/31/99  03:51p                   83 access.cnf
03/28/00  01:22p                8,059 deptodoc.btr
03/28/00  01:22p               66,940 doctodep.btr
03/28/00  01:22p                  178 linkinfo.cnf
03/28/00  01:02p                1,532 service.cnf
03/28/00  01:22p                    0 service.lck
08/31/99  03:51p                    2 services.cnf
12/01/99  01:36p                2,823 structure.cnf
08/31/99  03:53p                   24 writeto.cnf
06/26/02  05:05p        <DIR>          _vti_cnf
08/31/99  03:52p                  578 _x_todo.htm
08/31/99  03:52p                  580 _x_todoh.htm
              14 File(s)       80,799 bytes

 Directory of E:\WMS\pc\wmstour\_vti_pvt\_vti_cnf

06/26/02  05:05p        <DIR>          .
06/26/02  05:05p        <DIR>          ..
08/31/99  03:52p                  323 _x_todo.htm
08/31/99  03:52p                  324 _x_todoh.htm
               4 File(s)          647 bytes

     Total Files Listed:
            3158 File(s)    327,442,554 bytes
                                  0 bytes free
```

SOFTWARE VALIDATION TEST FOR MODFLOW 96 (GMS 3.1)

Prepared for

U.S. Nuclear Regulatory Commission
Contract NRC–02–02–012

Prepared by

Chandrika Manepally

Center for Nuclear Waste Regulatory Analyses
San Antonio, Texas

Approved by:

English C. Pearcy
Manager, Geohydrology and Geochemistry

11/25/2002
Date

CONTENTS

Section Page

1 SCOPE OF THE VALIDATION 1

2 REFERENCES 1

3 ENVIRONMENT 1
3.1 Software 1
3.2 Hardware Requirements 3

4 PREREQUISITES 3

5 ASSUMPTIONS AND CONSTRAINTS 3

6 TEST CASES 3
6.1 Test Case 1—Confined Aquifer Flow 4
6.1.1 Test Input 4
6.1.2 Analytical Solution 4
6.1.3 MODFLOW Solution 5
6.1.4 Test Results 5
6.2 Test Case 2—Unconfined Aquifer With Recharge 6
6.2.1 Test Input 6
6.2.2 Analytical Solution 6
6.2.3 MODFLOW Solution 6
6.2.4 Test Results 7
6.3 Test Case 3—Steady Radial Flow in a Confined Aquifer 8
6.3.1 Test Input 8
6.3.2 Analytical Solution 8
6.3.3 MODFLOW Solution 9
6.3.4 Test Results 9

7 NOTES 9

1 SCOPE OF THE VALIDATION

The software being validated is MODFLOW 96. MODFLOW is a 3D, cell-centered, finite difference, saturated flow code developed by the United States Geological Survey (Harbaugh and McDonald, 1988). This code is a commercial code and no changes will be made to the original at CNWRA. MODFLOW can perform both steady state and transient analyses and has a variety of boundary conditions and input options. There are several packages in MODFLOW. Some of the packages like "Basic," "BCF," and "Output" packages are required for all cases and packages like well, recharge, and stream are optional (Table 1). The tests cover the required packages and include those optional packages that are expected to be used at CNWRA. If packages not covered here need to be used in the future, they will be validated before such use. Test cases provided as a part of documentation available from the EPA discuss the use of other optional packages.

2 REFERENCES

The following documents are referenced in this Software Validation Test Plan.

Andersen, P.F. "A Manual of Instructional Problems for the USGS MODFLOW Model." EPA/600/R–93/010. Ada, Oklahoma: EPA, Robert Kerr Environmental Research Laboratory, Office of Research and Development. 1993. http://www.epa.gov/ada/csmos/models/modflow.html (Internet site last accessed 9/6/02).

Freeze, R.A. and J. Cherry. *Groundwater*. Englewood Cliffs, New Jersey: Prentice Hall. 1979.

Harbaugh, A.W. and McDonald, M.G. "User's Documentation for MODFLOW-96, An Update to the U.S. Geological Survey Modular Finite-Difference Ground-Water Flow Model." U.S. Geological Survey Open-File Report 96-485. 1996.

3 ENVIRONMENT

3.1 Software

GMS v. 3.1(will be referred to as GMS hereafter) includes a comprehensive graphical interface to the groundwater model MODFLOW. GMS supports MODFLOW as a pre- and post-processor. The input data for MODFLOW are generated by GMS and saved to a set of files. These files are read when MODFLOW is launched from the GMS menu. The output from MODFLOW is then imported to GMS for post-processing.

MODFLOW is divided into a series of components called "packages." Each package performs a specific task. The MODFLOW packages supported by GMS are listed in Table 1. The input for each package is contained in a separate text file. These packages are those most commonly used at CNWRA. Each of the packages shown in the table is fully supported by GMS. All of the input for each package can be input or edited using GMS. The package files generated by GMS can be read directly by MODFLOW to perform a simulation.

Table 1. MODFLOW Packages			
Package Name	**Abbreviation Name**	**Description**	**Always Required?**
Basic Package	BAS1	Used to specify the grid dimensions, the computational time steps, and an array identifying which packages are to be used.	Y
Output Control	OUT1	Controls what information is to be output from MODFLOW and when it is to be output.	N
Block Centered Flow Package	BCF1 BCF2 BCF3	Performs the cell by cell flow calculations. The input to this package includes layer types and cell attributes such as storage coefficients and transmissivity.	Y††
River Package	RIV1	Simulates river type boundary conditions.	N
Recharge Package	RCH1	Simulates recharge to the groundwater from precipitation.	N
Well Package	WEL1	Simulates injection/extraction wells.	N
Drain Package	DRN1	Simulates drain type boundary conditions.	N
Evapotranspiration Package	EVT1	Simulates the effect of evapotranspiration in the vadose zone.	N
General Head Boundary Package	GHB1	Simulates a general-purpose head-dependent source/sink. Commonly used to simulate lakes.	N
Stream/Aquifer Interaction Package	STR1	Simulates the exchange of water between the aquifer and surficial streams. Includes routing and automatic computation of stage.	N
Horizontal Flow Barrier Package	HFB1	Simulates the effect of horizontal flow barriers such as sheet piles and slurry trenches.	N
Time Variant Specified Head Package	CHD1	Simulates specified head boundary conditions where the head is allowed to vary with time.	N
Strongly Implicit Procedure Package	SIP1	An iterative solver based on the strongly implicit procedure.	Y*
Preconditioned Conjugate Gradient Package, Version 2	PCG2	An iterative solver based on the preconditioned conjugate gradient technique.	Y*
Slice Successive Overrelaxation Package	SOR1	An iterative solver based on the slice successive overrelaxation technique.	Y*

†† All three BCF packages are supported. BCF3 is used by default.
*One of the solver packages must be used.
Source: GMS Version 3.1 Reference Manual.

3.2 Hardware Requirements

Name: GMS Version 3.1

Details of the hardware used for this Software Validation Test: Windows NT 4.0

Peripherals used for this Software Validation Test: HP Colorjet Printer for documenting the results obtained

The program is interactive. Input information is entered using the keyboard, and output information is saved on the computer hard drive.

4 PREREQUISITES

Hardware Prerequisites:

Hardware Requirements for GMS are as follows

- (Source: http://gms.watermodeling.org/html/groundwatersystem.html) Internet site last accessed 11/27/01.
- *MS Windows*
- Intel Architecture (Pentium® II processor or better recommended)
- MS Windows 95/98/NT/2000
  - 32 MB RAM (64 MB RAM recommended for larger models)
  - 12 MB of free disk space
  - 8-bit (256) SVGA Color Display

5 ASSUMPTIONS AND CONSTRAINTS

The assumptions and constraints associated with this Software Validation Test Plan:

- These tests are for the MODFLOW 96 code only.
- The test cases included involve only the packages in Table 2.
- The "point–and-click" details of the step-by-step process of creating MODFLOW files using GMS pre-processor are described in the GMS User's Manual and are not described in the Software Validation Test.

6 TEST CASES

The following test cases are synthetic test cases that were created to compare the results from an analytical solution to that obtained by MODFLOW 96. The input and output files for MODFLOW are included with the test results (see accompanying CD). A low acceptability

range was chosen as the test cases are synthetic. Table 2 lists the packages used in the test cases.

Table 2. List of Packages Used in the Proposed Test Cases	
Package Name	**Test Cases**
Basic	1, 2, 3
Output	1, 2, 3
Block Centered Flow (BCF)	1, 3 (confined), 2 (unconfined)
PCG2	1, 2, 3
Recharge	2
Well	3

A manual titled "A Manual of Instructional Problems for the USGS MODFLOW Model" (Andersen, 1993) is also included with the test results. This manual was developed specifically for MODFLOW and it illustrates, by examples, the principles of groundwater flow modeling and model options. A secondary function of this manual was for verification purposes. The model-generated results are compared to analytical solutions, results of other models or to simulations with alternative boundary conditions or configurations.

6.1 Test Case 1—Confined Aquifer Flow

This case involves a 1D flow (x-direction only) in a confined aquifer. The aquifer is confined, homogeneous, and isotropic and the flow is steady state.

6.1.1 Test Input

Boundary Conditions:
Left: Constant Head = 10 m (h1) Right: Constant Head = 5 m (h2)
Length of the domain = 10 m (l)

Aquifer Properties:
Horizontal Hydraulic Conductivity (kh) = 1 m/day
Uniform thickness = 1 m

6.1.2 Analytical Solution

Solving the flow equation (Freeze and Cherry, 1979) for the problem described above, the head at any point x can be calculated using the equation:

$$h = \left[\frac{h_2 - h_1}{l} \right] x + h_1 \qquad (1)$$

@ x = 4.5 m from the equation, h = 7.77 mts.

6.1.3 MODFLOW Solution

As per the procedure described in the MODFLOW Grid approach (GMS User's Manual, Chapter 6), input files are created using the GMS preprocessor. The left and right boundaries are denoted as constant head boundaries and assigned values given above. The top and bottom are no-flow boundaries to simulate flow in the x-direction. The top and bottom elevations (required as a part of the BCF package) are 1.0 and 0.0 m respectively. The grid dimensions were dx = dy = 1m. The solver package used is PCG2- all the values of the parameters were default parameters. These will remain the same unless noted as changed for the remaining cases.

6.1.4 Test Results

The results are obtained from test1.hed. This is one of the output files generated by MODFLOW. The post-processing capabilities of GMS enable this output to be represented as contour lines on the grid and the screen displays the value by clicking on the cell node of interest. To compare the analytical and numerical solutions, node located at a distance of 4.5 m (denoted as ■ in Figure 1), the head calculated was 7.77 m from both the analytical and numerical solutions. The MODFLOW results are considered acceptable as they lie within ±1% of analytical solution.

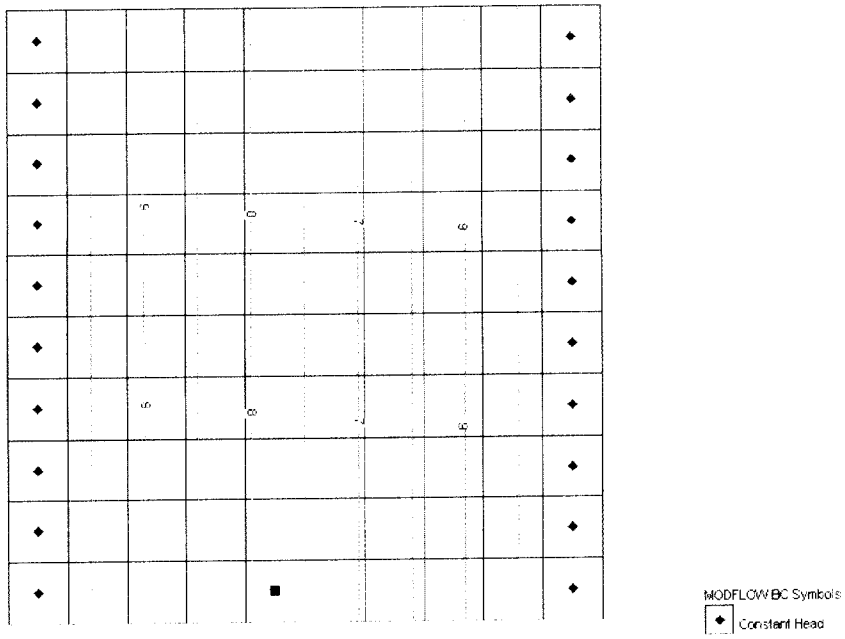

Figure 1. MODFLOW results of Case 1

6.2 Test Case 2—Unconfined Aquifer With Recharge

The problem involves flow in an unconfined homogeneous, isotropic aquifer with recharge. This is also a 1D-flow case (x-direction).

6.2.1 Test Input

Boundary Conditions:
Left: Constant Head = 70 m (h1) Right: Constant Head = 60 m (h2)
Length of the domain = 1000 m (l)

Aquifer Properties:
Horizontal Hydraulic Conductivity (k_h) = 40 m/yr Recharge = 15 mm/yr = 0.015m/yr
Uniform thickness = 1 m

6.2.2 Analytical Solution

Solving the flow equation for the above conditions

$$h(x) = \frac{-(Rch)x^2}{2T} + Ax + B \tag{2}$$

where
$h(x)$ = head at any point x
A, B = constants of integration dependent on boundary conditions
T = transmissivity of the aquifer

Aquifer transmissivity is calculated using an average saturated thickness (b) = (70 + 60)/2 = 65
$T = k_h \times b = 2600\ m^2/yr$

The constants of integration (A, B) are determined by substituting the left and right boundary conditions in Eq. (2)

@ $x = 0$, $h = 70 \Rightarrow B = 70$
@ $x = 1000$, $h = 60 \Rightarrow A = -7.11E-3$

Substituting the values of A and B in Eq. (2), the head at any distance x can be calculated using the following equation

$$h(x) = -\frac{(Rch)x^2}{2T}(-7.11E-3)x + 70 \tag{3}$$

6.2.3 MODFLOW Solution

As per the procedure described in the MODFLOW Grid approach (GMS User's Manual, Chapter 6), input files are created using the GMS preprocessor. The left and right boundaries are denoted as constant head boundaries and assigned values given above. The top and

bottom boundaries will be no-flow boundaries to simulate flow in the x-direction. The top and bottom elevations (required as a part of the bcf package) are 100.0 and 0.0 m respectively. The grid dimensions were dx = dy = 50 m. The input for hydraulic properties is in terms of the hydraulic conductivity rather than the transmissivity. The code calculates the transmissivity at every step of the simulation based on the elevation of the water table. The recharge rate is input in the Recharge Package. Figure 2 shows head contours obtained by MODFLOW.

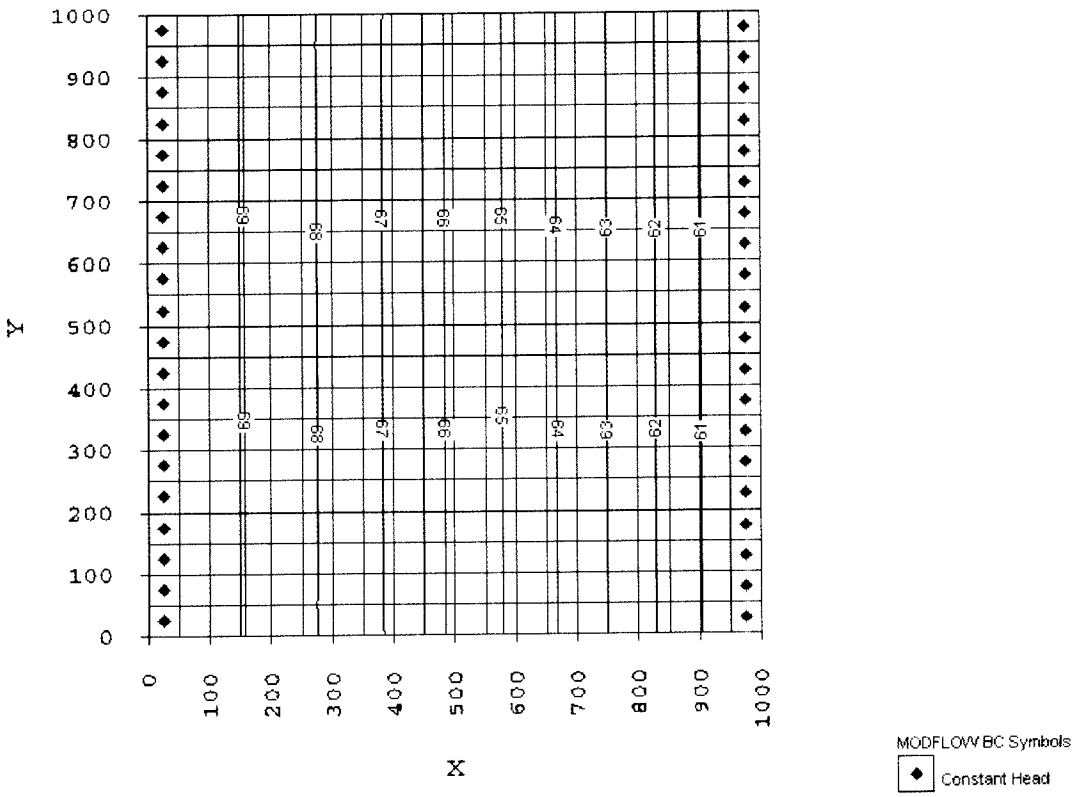

Figure 2. MODFLOW results for Case 2

6.2.4 Test Results

The results used for validation will be obtained from test2.hed file. This is one of the output files generated by MODFLOW. The post-processing capabilities of GMS enable this output to be represented as contour lines on the grid and the screen displays the value by clicking on the cell node of interest. The grid axes orientation is shown in the figure. This indicates that the nodes on the left boundary are at x = 25 m. Hence, the distances to the subsequent nodes in the x-direction accounted for this shift of axes. For example, if a node is located at a distance of 275 m from the boundary, the distance from the constant head boundary x = 275-25 = 250 m. The head contours and grid obtained by executing MODFLOW are shown in Figure 2. The code calculates the heads at the center of each cell (cell node). Heads at any other location has to be interpolated. Table 2 compares the analytical model results obtained based on Eq. (3) and MODFLOW results. The results were acceptable (±1% of analytical results) for all values of x.

Table 3. Comparison of Analytical and MODFLOW Results for Test Case 2		
Distance	Head h (m)	
x (m)	Analytical Solution	MODFLOW
50	69.64	69.63
100	69.26	69.24
200	68.46	68.43
300	67.61	67.55
400	66.69	66.60
500	65.72	65.58
600	64.70	64.48
700	63.61	63.31
800	62.47	62.05
900	61.26	60.71

6.3 Test Case 3—Steady Radial Flow in a Confined Aquifer

This case deals with the Theim solution for flow in a well. All assumptions associated with this equation apply to this problem. The assumptions inherent in the Theim solution include:

- The aquifer is homogeneous, isotropic, has uniform thickness, and is of infinite areal extent.
- The initial potentiometric surface is horizontal, uniform, and the value used is 90 m.
- The well is pumped at a constant rate and it fully penetrates the aquifer. The well is located in the center of the model domain.
- Flow to the well is horizontal and the aquifer is fully confined.
- Steady state flow conditions have been achieved.

6.3.1 Test Input

Boundary Conditions:
All the boundaries were assigned as constant head of 90 m. This implies that the radius of influence of the well (R) is less than 90 m.

Aquifer properties:
The only property required for this steady-state simulation is the transmissivity of the confined aquifer = 13.9 m^2/s.

Well Properties:
The well is pumped at a constant rate of 400 m^3/s and is located at the center of the domain.

6.3.2 Analytical Solution

The Theim equation for an unconfined aquifer is as follows:

$$Q = 2\pi T(h_1 - h_2)\ln\left[\frac{r_1}{r_2}\right] \tag{4}$$

where

Q	=	Pumping rate of well (m^3/s)
T	=	Transmissivity of the aquifer
h	=	head (m)
r	=	radial distance from well (m)

1,2 – subscripts for 2 observation points

The boundary has a fixed head of 90 m, and the radial distance from the well to the boundary is 50 m. This is used as observation point 1. The other observation point is considered at various distances *x* from the well. The heads are calculated using Eq. (4).

6.3.3 MODFLOW Solution

A constant head boundary of 90 m was assigned to all the boundary nodes as defined in the problem. The grid dimensions were dx = dy = 5 m. All boundaries are assigned as constant head as shown. The well is placed in the center of the domain. The pumping rate is assigned in the Well Package. For cases involving wells, drawdown information can be generated one of the options in the Output Package. Figure 3 shows the head contours obtained by MODFLOW.

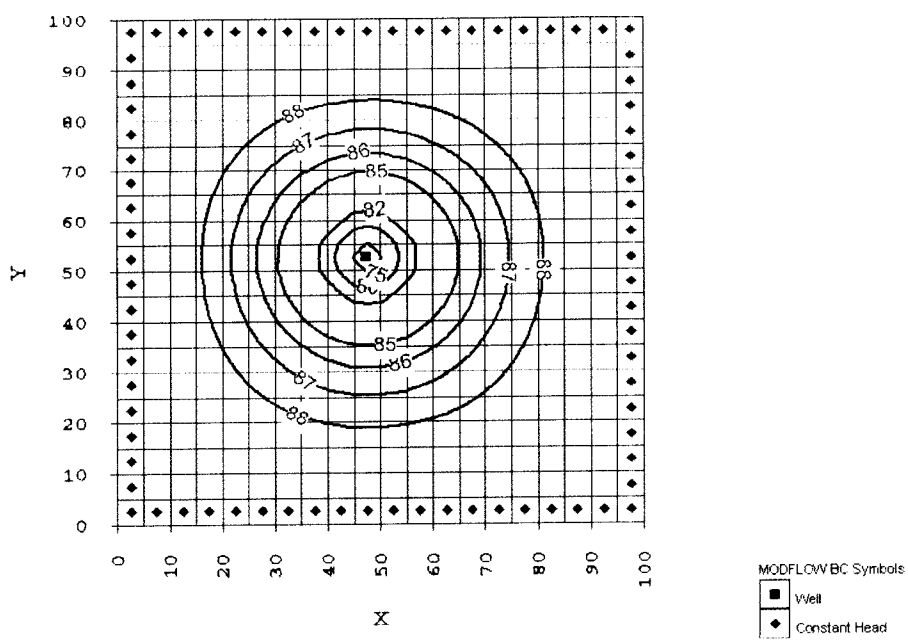

Figure 3 - MODFLOW test results for Case 3

6.3.4 Test Results

The MODFLOW results used for validation are obtained from the file Test3.dat. This is one of the output files generated that contains the drawdown at various nodes. The post-processing capabilities of GMS enable the heads to be represented as contour lines (Figure 3) on the grid and the screen displays the value by clicking on the cell node of interest. The heads at various locations from MODFLOW will be compared to the analytical values obtained from Eq. (4). The values were calculated assuming h_1 = 90m and r_1= 50m in Eq. (4). Table 3 compares the analytical model results obtained based on Eq. (4) and MODFLOW results (test3/comparison.xls). The results were acceptable (±1% of analytical results) for all values of r.

Table 4. Comparison of Analytical and MODFLOW Results for Test Case 3

Radial Distance r (m)	Analytical Solution h (m)	MODFLOW Solution h (m)
10	82.6	82.4
15	84.5	84.3
20	85.8	85.6
25	86.8	86.6
30	87.7	87.5
35	88.4	88.2
40	89.0	88.8
45	89.5	89.4

7 NOTES

MODFLOW is widely used by the USGS and throughout the world. The USGS website—http://water.usgs.gov/cgi-bin/man_wrdapp?modflw96 (Internet site last accessed 9/6/02)—gives the details of the various stages of development and documents related to MODFLOW 96.

The following website addresses list some of the groundwater modeling projects where MODFLOW has been successfully used. Internet sites last accessed 9/6/02.

- Death Valley Regional Groundwater Model
  http://az.water.usgs.gov/projects/nn103.html

- Various Groundwater Flow Models in St. Johns River Water Management District, Florida http://sjr.state.fl.us/programs/plan_monitor/gw_monitor/gw_model.html

- Regional Groundwater Flow Modeling in Texas by Texas Water Development Board
  http://www.twdb.state.tx.us/gam/GAM_documents/texas_modeling.pdf

- Delineation of aquifer protection zone ii for public water supplies in Massachusetts by HydroAnalysis Inc.
  http://www.ultranet.com/~shanahan/HArpgw.html

The following references list some of the published journal articles where MODFLOW was used.

Chu, X., H. Basagaoglu, M.A. Mariño, and R.E. Volker. "Aldicarb Transport in Subsurface Environment: Comparison of Models." *Journal of Environmental Engineering*. Vol. 126, No. 5. pp. 121–129. 2000.

Elmore, A.C. and J.B. Hellman. "Model-Predicted Groundwater Circulation Well Performance." *Practice Periodical of Hazardous, Toxic, and Radioactive Waste Management*. Vol. 5, No. 4. pp. 203–210. 2001.

Lieuallen-Dulam, K.K. and C.S. Sawyer. "Implementing Intrawell, Intercell Flow into Finite-Difference Ground-Water Flow Model." *Journal of Hydrologic Engineering*. Vol. 2, No. 3. pp. 109–112. 1997.

Pohll, G.M. and J.C. Guitjens. "Modeling Regional Flow and Flow to Drains." *Journal of Irrigation and Drainage Engineering*. Vol. 120, No. 5. pp. 925–939. 1994.

Zammouri, M. "Case Study of Water Table Evaporation at Ichkeul Marshes (Tunisia)." *Journal of Irrigation and Drainage Engineering*. Vol. 127, No. 5. pp. 265–271. 2001.

Software Validation Test Plan

83/93

SOFTWARE VALIDATION TEST PLAN FOR MODFLOW 96

Prepared for

U.S. Nuclear Regulatory Commission
Contract NRC–02–97–009

Prepared by

Chandrika Manepally

Center for Nuclear Waste Regulatory Analyses
San Antonio, Texas

Approved by:

English C. Pearcy
Manager, Geohydrology and Geochemistry

June 20, 2002
Date

84/93

CONTENTS

Section Page

1 SCOPE OF THE VALIDATION 1

2 REFERENCES 1

3 ENVIRONMENT 1

3.1 Software 1
3.2 Hardware Requirements 3

4 PREREQUISITES 3

5 ASSUMPTIONS AND CONSTRAINTS 3

6 TEST CASES 3

6.1 Test Case 1—Confined Aquifer Flow 4
6.1.1 Test Input 4
6.1.2 Analytical Solution 4
6.1.3 MODFLOW Solution 5
6.1.4 Test Results 5
6.2 Test Case 2—Unconfined Aquifer With Recharge 5
6.2.1 Test Input 5
6.2.2 Analytical Solution 5
6.2.3 MODFLOW Solution 6
6.2.4 Test Results 6
6.3 Test Case 3—Steady Radial Flow in a Confined Aquifer 6
6.3.1 Test Input 7
6.3.2 Analytical Solution 7
6.3.3 Test Results 7

7 NOTES 8

85/93

1 SCOPE OF THE VALIDATION

The software being validated is MODFLOW 96. MODFLOW is a 3D, cell-centered, finite difference, saturated flow code developed by the United States Geological Survey (Harbaugh and McDonald, 1988). This code is a commercial code and no changes will be made to the original at CNWRA. MODFLOW can perform both steady state and transient analyses and has a variety of boundary conditions and input options. There are several packages in MODFLOW. Some of the packages like "Basic," "BCF," and "Output" packages are required for all cases and packages like well, recharge, and stream are optional (Table 1). This test plan covers the required packages and includes those optional packages that are expected to be used at CNWRA. If packages not covered here need to be used in the future, they must be validated before such use. Test cases provided as a part of documentation available from the EPA discuss the use of other optional packages.

2 REFERENCES

The following documents are referenced in this Software Validation Test Plan.

Andersen, P.F. "A Manual of Instructional Problems for the USGS MODFLOW Model." EPA/600/R–93/010. Ada, Oklahoma: EPA, Robert Kerr Environmental Research Laboratory, Office of Research and Development. 1993. <http://www.epa.gov/ada/csmos/models/modflow.html> (June 21, 2002).

Freeze, R.A. and J. Cherry. *Groundwater.* Englewood Cliffs, New Jersey: Prentice Hall. 1979.

Harbaugh, A.W. and McDonald, M.G. "User's Documentation for MODFLOW-96, An Update to the U.S. Geological Survey Modular Finite-Difference Ground-Water Flow Model." U.S. Geological Survey Open-File Report 96-485. 1996.

3 ENVIRONMENT

3.1 Software

GMS includes a comprehensive graphical interface to the groundwater model MODFLOW. GMS supports MODFLOW as a pre- and post-processor. The input data for MODFLOW are generated by GMS and saved to a set of files. These files are read when MODFLOW is launched from the GMS menu. The output from MODFLOW is then imported to GMS for post-processing.

MODFLOW is divided into a series of components called "packages." Each package performs a specific task. The MODFLOW packages supported by GMS are listed in Table 1. The input for each package is contained in a separate text file. These packages are those most commonly used at CNWRA. Each of the packages shown in the table is fully supported by GMS. All of the input for each package can be input or edited using GMS. The package files generated by GMS can be read directly by MODFLOW to perform a simulation.

1 SCOPE OF THE VALIDATION

The software being validated is MODFLOW 96. MODFLOW is a 3D, cell-centered, finite difference, saturated flow code developed by the United States Geological Survey (McDonald & Harbaugh, 1988). This code is a commercial code and no changes will be made to the original at CNWRA. MODFLOW can perform both steady state and transient analyses and has a variety of boundary conditions and input options. There are several packages in MODFLOW. Some of the packages like "Basic," "BCF," and "Output" packages are required for all cases and packages like well, recharge, and stream are optional (Table 1). This test plan covers the required packages and includes those optional packages that are expected to be used at CNWRA. If packages not covered here need to be used in the future, they must be validated before such use. Test cases provided as a part of documentation available from the EPA discuss the use of other optional packages.

2 REFERENCES

The following documents are referenced in this Software Validation Test Plan.

Andersen, P.F. "A Manual of Instructional Problems for the USGS MODFLOW Model." EPA/600/R–93/010. Ada, Oklahoma: EPA, Robert Kerr Environmental Research Laboratory, Office of Research and Development. 1993. <http://www.epa.gov/ada/csmos/models/modflow.html> (June 21, 2002).

Freeze, R.A. and J. Cherry. *Groundwater.* Englewood Cliffs, New Jersey: Prentice Hall. 1979.

Harbaugh, A.W. and McDonald, M.G. "User's Documentation for MODFLOW-96, An Update to the U.S. Geological Survey Modular Finite-Difference Ground-Water Flow Model." U.S. Geological Survey Open-File Report 96-485. 1996.

3 ENVIRONMENT

3.1 Software

GMS includes a comprehensive graphical interface to the groundwater model MODFLOW. GMS supports MODFLOW as a pre- and post-processor. The input data for MODFLOW are generated by GMS and saved to a set of files. These files are read when MODFLOW is launched from the GMS menu. The output from MODFLOW is then imported to GMS for post-processing.

MODFLOW is divided into a series of components called "packages." Each package performs a specific task. The MODFLOW packages supported by GMS are listed in Table 1. The input for each package is contained in a separate text file. These packages are those most commonly used at CNWRA. Each of the packages shown in the table is fully supported by GMS. All of the input for each package can be input or edited using GMS. The package files generated by GMS can be read directly by MODFLOW to perform a simulation.

87/53

Table 1. MODFLOW Packages			
Package Name	**Abbreviation Name**	**Description**	**Always Required?**
Basic Package	BAS1	Used to specify the grid dimensions, the computational time steps, and an array identifying which packages are to be used.	Y
Output Control	OUT1	Controls what information is to be output from MODFLOW and when it is to be output.	N
Block Centered Flow Package	BCF1 BCF2 BCF3	Performs the cell by cell flow calculations. The input to this package includes layer types and cell attributes such as storage coefficients and transmissivity.	Y††
River Package	RIV1	Simulates river type boundary conditions.	N
Recharge Package	RCH1	Simulates recharge to the groundwater from precipitation.	N
Well Package	WEL1	Simulates injection/extraction wells.	N
Drain Package	DRN1	Simulates drain type boundary conditions.	N
Evapotranspiration Package	EVT1	Simulates the effect of evapotranspiration in the vadose zone.	N
General Head Boundary Package	GHB1	Simulates a general-purpose head-dependent source/sink. Commonly used to simulate lakes.	N
Stream/Aquifer Interaction Package	STR1	Simulates the exchange of water between the aquifer and surficial streams. Includes routing and automatic computation of stage.	N
Horizontal Flow Barrier Package	HFB1	Simulates the effect of horizontal flow barriers such as sheet piles and slurry trenches.	N
Time Variant Specified Head Package	CHD1	Simulates specified head boundary conditions where the head is allowed to vary with time.	N
Strongly Implicit Procedure Package	SIP1	An iterative solver based on the strongly implicit procedure.	Y*
Preconditioned Conjugate Gradient Package, Version 2	PCG2	An iterative solver based on the preconditioned conjugate gradient technique.	Y*
Slice Successive Overrelaxation Package	SOR1	An iterative solver based on the slice successive overrelaxation technique.	Y*

†† All three BCF packages are supported. BCF3 is used by default.
*One of the solver packages must be used.
Source: GMS Version 3.1 Reference Manual.

3.2 Hardware Requirements

Name: GMS Version 3.1

Details of the hardware used for this Software Validation Test Plan: Windows NT 4.0

Peripherals used for this Software Validation Test Plan: HP Colorjet Printer for documenting the results obtained

The program is interactive. Input information is entered using the keyboard, and output information is saved on the computer hard drive.

4 PREREQUISITES

Hardware Prerequisites:

Hardware Requirements for GMS are as follows

- (Source: http://gms.watermodeling.org/html/groundwatersystem.html) Internet site last accessed 11/27/01.
- *MS Windows*
- Intel Architecture (Pentium® II processor or better recommended)
- MS Windows 95/98/NT/2000
  - 32 MB RAM (64 MB RAM recommended for larger models)
  - 12 MB of free disk space
  - 8-bit (256) SVGA Color Display

5 ASSUMPTIONS AND CONSTRAINTS

The assumptions and constraints associated with this Software Validation Test Plan:

- These tests are for the MODFLOW 96 code only.
- The test cases included involve only the packages in Table 2.
- The "point–and-click" details of the step-by-step process of creating MODFLOW files using GMS pre-processor are described in the GMS User's Manual and are not described in the Software Validation Test Plan.

6 TEST CASES

The following test cases are synthetic test cases that were created to compare the results from an analytical solution to that obtained by MODFLOW 96. The input and output files for MODFLOW will be included with the test results. A low acceptability range was chosen as the

test cases are synthetic. A manual titled "A Manual of Instructional Problems for the USGS MODFLOW Model" (Andersen, 1993) will also be included with the test results. This manual was developed specifically for MODFLOW and it illustrates, by examples, the principles of groundwater flow modeling and model options. A secondary function of this manual was for verification purposes. The model-generated results are compared to analytical solutions, results of other models or to simulations with alternative boundary conditions or configurations. Table 2 lists the packages used in the test cases.

Table 2. List of Packages Used in the Proposed Test Cases

Package Name	Test Cases
Basic	1, 2, 3
Output	1, 2, 3
Block Centered Flow	1, 3 (confined), 2 (unconfined)
PCG2	1, 2, 3
Recharge	2
Well	3

6.1 Test Case 1—Confined Aquifer Flow

This case involves a 1D flow (x-direction only) in a confined aquifer. The aquifer is confined, homogeneous, and isotropic and the flow is steady state.

6.1.1 Test Input

Boundary Conditions:
Left: Constant Head = 10 m (h1) Right: Constant Head = 5 m (h2)
Length of the domain = 10 m (l)

Aquifer Properties:
Horizontal Hydraulic Conductivity (kh) = 1 m/day
Uniform thickness = 1 m

6.1.2 Analytical Solution

Solving the flow equation (Freeze and Cherry, 1979) for the problem described above, the head at any point *x* can be calculated using the equation:

$$h = \left[\frac{h_2 - h_1}{l}\right] x + h_1 \tag{1}$$

6.1.3 MODFLOW Solution

As per the procedure described in the MODFLOW Grid approach (GMS User's Manual, Chapter 6), input files will be created using the GMS preprocessor. The left and right boundaries will be denoted as constant head boundaries and assigned values given above. The top and bottom will be no-flow boundaries to simulate flow in the x-direction.

6.1.4 Test Results

The results used for validation will be obtained from *.hed file. This is one of the output files generated by MODFLOW. The post-processing capabilities of GMS enable this output to be represented as contour lines on the grid and the screen displays the value by clicking on the cell node of interest. For validation, heads at various locations will be compared to the analytical values. The MODFLOW results will be considered acceptable if within ±1% of analytical solution.

6.2 Test Case 2—Unconfined Aquifer With Recharge

The problem involves flow in an unconfined homogeneous, isotropic aquifer with recharge. This is also a 1D-flow case (x-direction).

$$h(x) = \frac{(Rch)x^2}{2T} + Ax + B \tag{2}$$

6.2.1 Test Input

Boundary Conditions:
Left: Constant Head = 70 m (h1) Right: Constant Head = 60 m (h2)
Length of the domain = 1000 m (l)

Aquifer Properties:
Horizontal Hydraulic Conductivity (kh) = 40 m/yr Recharge = 15 mm/yr = 0.015m/yr
Uniform thickness = 1 m

6.2.2 Analytical Solution

Solving the flow equation for the above conditions

where

$$h(x) = \frac{(Rch)x^2}{2T}(-7.11E-3)x + 70 \tag{3}$$

$h(x)$ = head at any point x
A, B = constants of integration
T = transmissivity of the aquifer

Aquifer transmissivity is calculated using an average saturated thickness (b) = (70 + 60)/2 = 65
$T = k \times b = 2600\ m^2/yr$

The constants of integration (A, B) are determined by substituting the left and right boundary conditions in Eq. 2

@ $x = 0$, $h = 70 \Rightarrow B = 70$
@ $x = 1000$, $h = 60 \Rightarrow A = -7.11E-3$

Substituting the values of A and B in Eq. 2, the head at any distance x can be calculated

6.2.3 MODFLOW Solution

As per the procedure described in the MODFLOW Grid approach (GMS User's Manual, Chapter 6), input files will be created using the GMS preprocessor. The left and right boundaries will be denoted as constant head boundaries and assigned values given above. The top and bottom boundaries will be no-flow boundaries to simulate flow in the x-direction. The recharge rate is input in the Recharge Package.

6.2.4 Test Results

The results used for validation will be obtained from *.hed file. This is one of the output files generated. The post-processing capabilities of GMS enable this output to be represented as contour lines on the grid and the screen displays the value by clicking on the cell node of interest. For validation, heads at various locations will be compared to the analytical values. The MODFLOW results will be considered acceptable if within ±1% of analytical solution.

6.3 Test Case 3—Steady Radial Flow in a Confined Aquifer

This case deals with the Theim solution for flow in a well. All assumptions associated with this equation apply to this problem. The assumptions inherent in the Theim solution include:

- The aquifer is homogeneous, isotropic, has uniform thickness, and is of infinite areal extent.
- The initial potentiometric surface is horizontal, uniform, and the value used is 90 m.
- The well is pumped at a constant rate and it fully penetrates the aquifer. The well is located in the center of the model domain.
- Flow to the well is horizontal and the aquifer is fully confined.

6.3.1 Test Input

Boundary Conditions:
All the boundaries were assigned as constant head of 90 m. This implies that the radius of influence of the well (R) is 90 m.

Aquifer properties:
The only property required for this steady-state simulation is the transmissivity of the aquifer = 13.9 m^2/s.

Well Properties:
The well is pumped at a constant rate of 400 m^3/s and is located at the center of the domain.

6.3.2 Analytical Solution

The Theim equation is as follows:

$$Q = 2\pi T(h_1 - h_2)\ln\left[\frac{r_1}{r_2}\right] \tag{4}$$

where

Q	=	Pumping rate of well (m^3/s)
T	=	Transmissivity of the aquifer
h	=	head (m)
r	=	radial distance from well (m)

1,2 – subscripts for 2 observation points

The boundary has a fixed head of 90 m, and the radial distance from the well to the boundary is 50 m. This is used as observation point 1. The other observation point is considered at various distances *x* from the well. The heads are calculated using Eq. (4).

6.3.3 Test Results

The results used for validation are obtained from *.hed file. This is one of the output files generated. The post-processing capabilities of GMS enable this output to be represented as contour lines on the grid and the screen displays the value by clicking on the cell node of interest. For validation, heads at various locations will be compared to the analytical values. The MODFLOW results will be considered acceptable if within ±1% of analytical solution. For cases involving wells, drawdown information can be generated one of the options in the Output Package.

7 NOTES

MODFLOW is widely used by the USGS and throughout the world. The USGS website—http://water.usgs.gov/cgi-bin/man_wrdapp?modflw96 (Internet site last accessed 06/04/02)—gives the details of the various stages of development and documents related to MODFLOW 96.

The following website addresses list some of the groundwater modeling projects where MODFLOW has been successfully used. Internet sites last accessed 06/04/02.

- Death Valley Regional Groundwater Model
  http://az.water.usgs.gov/projects/nn103.html
- Various Groundwater Flow Models in St. Johns River Water Management District, Florida http://sjr.state.fl.us/programs/plan_monitor/gw_monitor/gw_model.html
- Regional Groundwater Flow Modeling in Texas by Texas Water Development Board
  http://www.twdb.state.tx.us/gam/GAM_documents/texas_modeling.pdf
- Delineation of aquifer protection zone ii for public water supplies in Massachusetts by HydroAnalysis Inc.
  http://www.ultranet.com/~shanahan/HArpgw.html

The following references list some of the published journal articles where MODFLOW was used.

Chu, X., H. Basagaoglu, M.A. Mariño, and R.E. Volker. "Aldicarb Transport in Subsurface Environment: Comparison of Models." *Journal of Environmental Engineering*. Vol. 126, No. 5. pp. 121–129. 2000.

Elmore, A.C. and J.B. Hellman. "Model-Predicted Groundwater Circulation Well Performance." *Practice Periodical of Hazardous, Toxic, and Radioactive Waste Management*. Vol. 5, No. 4. pp. 203–210. 2001.

Lieuallen-Dulam, K.K. and C.S. Sawyer. "Implementing Intrawell, Intercell Flow into Finite-Difference Ground-Water Flow Model." *Journal of Hydrologic Engineering*. Vol. 2, No. 3. pp. 109–112. 1997.

Pohll, G.M. and J.C. Guitjens. "Modeling Regional Flow and Flow to Drains." *Journal of Irrigation and Drainage Engineering*. Vol. 120, No. 5. pp. 925–939. 1994.

Zammouri, M. "Case Study of Water Table Evaporation at Ichkeul Marshes (Tunisia)." *Journal of Irrigation and Drainage Engineering*. Vol. 127, No. 5. pp. 265–271. 2001.