IMPORTANT !! Read these instructions before reviewing PDF files.

This CD contains the National Enrichment Facility License Application documents in PDF format.

> The Physical Security Plan, Safeguards Contingency Plan, Guard Force Training and Qualification Plan, and the Standard Practice Procedure Plan for the Protection of Classified Matter are not included, as these documents contain or reference safeguards information.

Instructions for navigating within these files:

1. **Use Acrobat Reader version 5.0 or higher**. If you do not have that version, you may download it from this CD or by going to www.adobe.com.

2. **Hyperlinks** have been added to the PDF files on this CD that **will take you to the referenced Figure or Table**.

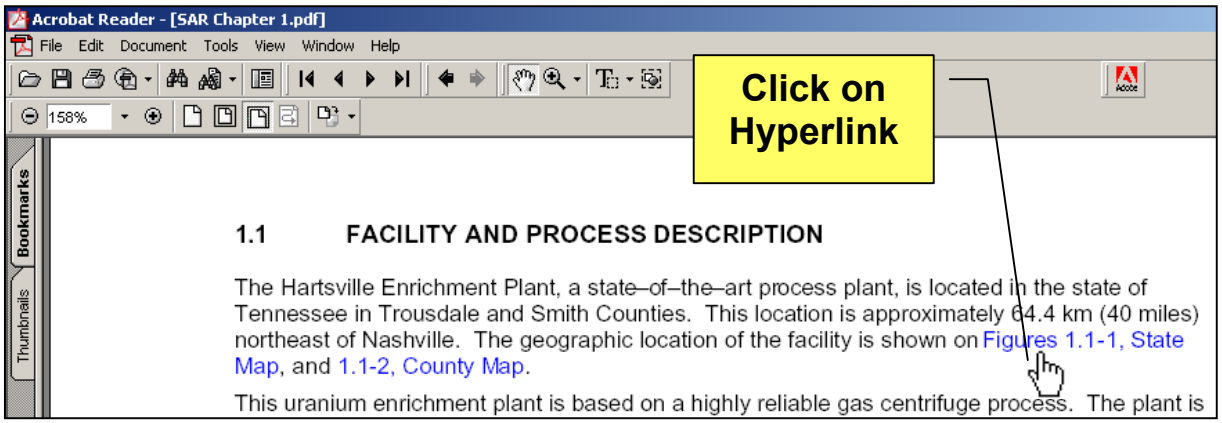

3. After viewing the figure or table, **you may return** to the page you were reading by **clicking the Go to Previous View button**. See example below.

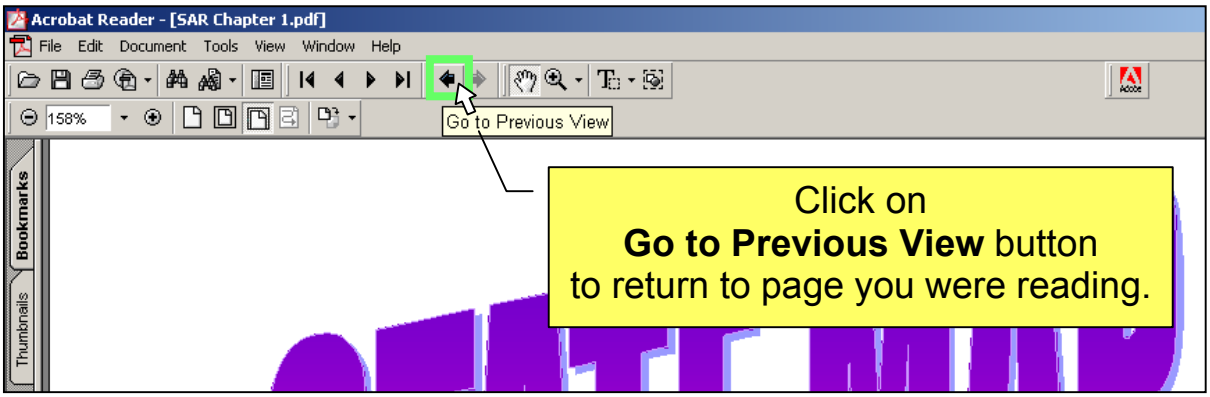

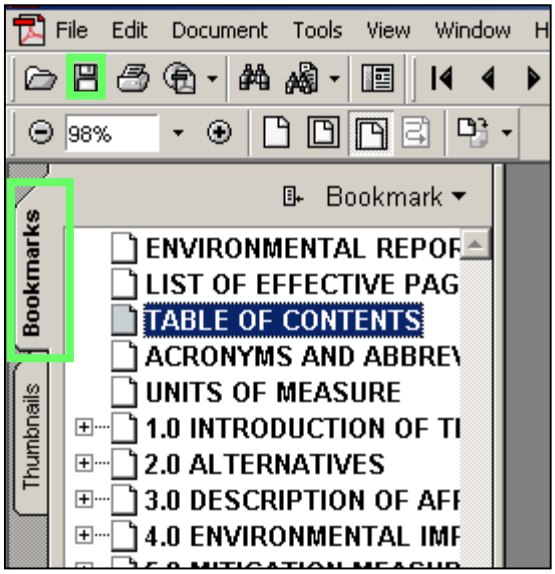

4. When a PDF file is opened, **bookmarks will be available on the left-hand side of the frame**. The document pages will appear in the right-hand side of the frame.

   The bookmarks are structured similar to a folders explorer “tree”. Click the **plus** (+) or **minus** (-) symbols to expand or collapse groups of bookmarks.

5. Files are organized by **chapters** and **sections**.

Revision 1, February 2004

NATIONAL ENRICHMENT FACILITY

SAFETY ANALYSIS REPORT

TABLE OF CONTENTS

Page

3.5 UTILITY AND SUPPORT SYSTEMS 3.5-1

3.5.1 Building Ventilation 3.5-1
3.5.1.1 System Descriptions 3.5-2
3.5.1.2 Major Components 3.5-10
3.5.1.3 System Interfaces 3.5-10
3.5.1.4 Operational Characteristics 3.5-10
3.5.1.5 Safety Considerations 3.5-11
3.5.2 Electrical System 3.5-12
3.5.2.1 System Description 3.5-12
3.5.2.2 Major Components 3.5-14
3.5.2.3 Interfaces 3.5-15
3.5.2.4 Operating Characteristics 3.5-15
3.5.2.5 Safety Considerations 3.5-19
3.5.3 Compressed Air System 3.5-19
3.5.3.1 System Description 3.5-19
3.5.3.2 Major Components 3.5-20
3.5.3.3 System Interfaces 3.5-21
3.5.3.4 Operational Characteristics 3.5-21
3.5.3.5 Safety Considerations 3.5-22
3.5.4 Water Supply 3.5-23
3.5.4.1 Process Water System 3.5-23
3.5.4.2 Potable Water System 3.5-24
3.5.4.3 Deionized Water Supply and Distribution System 3.5-25
3.5.4.4 Hot Water System 3.5-28
3.5.5 Cooling Water Systems 3.5-31
3.5.5.1 HVAC Cooling Water System 3.5-31
3.5.5.2 Centrifuge Cooling Water System 3.5-35
3.5.5.3 Centrifuge Cooling Water Distribution System 3.5-37
3.5.6 Septic System 3.5-39
3.5.6.1 System Description 3.5-39
3.5.6.2 Safety Considerations 3.5-39
3.5.7 Communication and Alarm Annunciation Systems 3.5-40
3.5.7.1 Communication Systems Description 3.5-40
3.5.7.2 System Interfaces 3.5-42
3.5.7.3 Major Components 3.5-42
3.5.7.4 Operational Characteristics 3.5-42
3.5.7.5 Safety Considerations 3.5-43
3.5.8 Fire Protection 3.5-43
3.5.9 Control Systems 3.5-43
3.5.9.1 Functional Requirements 3.5-43
3.5.9.2 System Description 3.5-44
3.5.9.3 Safety Considerations 3.5-49
3.5.10 Standby Diesel Generator System 3.5-50
3.5.10.1 System Description 3.5-50
3.5.10.2 Major Components 3.5-51

TABLE OF CONTENTS

Page

3.5.10.3 System Interfaces 3.5-51
3.5.10.4 Operational Characteristics 3.5-51
3.5.10.5 Safety Considerations 3.5-52
3.5.10.6 Diesel Fuel Spill Control and Leak Detection 3.5-52
3.5.11 Nitrogen System 3.5-52
3.5.11.1 System Description 3.5-52
3.5.11.2 Major Components 3.5-53
3.5.11.3 System Interfaces 3.5-53
3.5.11.4 Operational Characteristics 3.5-54
3.5.11.5 Safety Considerations 3.5-55
3.5.12 Liquid Effluent Collection and Treatment System 3.5-55
3.5.12.1 Aqueous Liquid Effluents 3.5-55
3.5.12.2 Non-Aqueous Liquid Effluents 3.5-61
3.5.13 Solid Waste Collection System 3.5-62
3.5.13.1 Wet Solid Wastes 3.5-63
3.5.13.2 Dry Solid Wastes 3.5-66
3.5.14 Decontamination Workshop 3.5-71
3.5.14.1 System Description 3.5-72
3.5.14.2 Major Components 3.5-73
3.5.14.3 Interfaces 3.5-74
3.5.14.4 Operating Characteristics 3.5-74
3.5.14.5 Safety Considerations 3.5-78
3.5.15 Fomblin Oil Recovery System 3.5-79
3.5.15.1 System Description 3.5-79
3.5.15.2 Major Components 3.5-80
3.5.15.3 Interfaces 3.5-80
3.5.15.4 Operating Characteristics 3.5-81
3.5.15.5 Safety Considerations 3.5-81
3.5.16 Laundry System 3.5-81
3.5.16.1 System Description 3.5-81
3.5.16.2 Major Components 3.5-82
3.5.16.3 Interfaces 3.5-83
3.5.16.4 Operating Characteristics 3.5-83
3.5.16.5 Safety Considerations 3.5-83
3.5.17 Ventilated Room 3.5-84
3.5.17.1 System Description 3.5-84
3.5.17.2 Major Components 3.5-85
3.5.17.3 Interfaces 3.5-85
3.5.17.4 Safety Considerations 3.5-85
3.5.18 Chemical Laboratory 3.5-86
3.5.18.1 System Description 3.5-86
3.5.18.2 Major Components 3.5-87
3.5.18.3 Interfaces 3.5-87
3.5.18.4 Safety Considerations 3.5-88
3.5.19 Cylinder Preparation Room 3.5-88

TABLE OF CONTENTS

Page

3.5.19.1 System Description 3.5-89
3.5.19.2 Major Components 3.5-89
3.5.19.3 Interfaces.....3.5-90
3.5.19.4 Safety Considerations 3.5-90
3.5.20 References 3.5-91

LIST OF TABLES

Table 3.5-1	Codes And Standards
Table 3.5-2	Compressed Air System Design Parameters
Table 3.5-3	Average Water Consumption
Table 3.5-4	Deionized Water Supply and Distribution System Design Parameters
Table 3.5-5	Hot Water System Design Parameters
Table 3.5-6	HVAC Cooling Water System Design Parameters
Table 3.5-7	Centrifuge Cooling Water System Design Parameters
Table 3.5-8	Nitrogen System Design Parameters
Table 3.5-9	Liquid Effluent Collection and Treatment System, Collection Tanks
Table 3.5-10	Liquid Effluent Collection and Treatment System, Monitoring and Treatment Tanks
Table 3.5-11	Items Processed in the Decontamination Workshop

LIST OF FIGURES

Figure 3.5-1 Flow Diagram Separations Building Module First Floor Electrical Room HVAC System
Figure 3.5-2 Flow Diagram “Link” Corridor First and Second Floor HVAC System
Figure 3.5-3 Flow Diagram Process Services Area Above Cascade HVAC System
Figure 3.5-4 Flow Diagram Process Services Areas First, Second and Third Floor HVAC System
Figure 3.5-5 Flow Diagram UF_6 Handling Area HVAC System
Figure 3.5-6 Flow Diagram Blending & Liquid Sampling Area HVAC System
Figure 3.5-7 Flow Diagram TSB Contamination Workshops HVAC System
Figure 3.5-8 Flow Diagram TSB Non-Contaminated Areas HVAC System
Figure 3.5-9 Flow Diagram TSB Offices and Control Room HVAC System
Figure 3.5-10 Flow Diagram TSB Labs HVAC System
Figure 3.5-11 Code and Area Classifications Technical Services Building HVAC Pressurization
Figure 3.5-12 Flow Diagram CAB Centrifuge Component Storage Area HVAC System
Figure 3.5-13 Flow Diagram CAB Centrifuge Storage & Misc Areas HVAC System
Figure 3.5-14 Flow Diagram CAB Offices & Miscellaneous Rooms HVAC System
Figure 3.5-15 Flow Diagram CAB Centrifuge Assembly Area HVAC System
Figure 3.5-16 Flow Diagram Cylinder Rec. & Dispatch Bld. HVAC System
Figure 3.5-17 Flow Diagram Administration Building HVAC System
Figure 3.5-18 Flow Diagram Central Utilities Building HVAC System
Figure 3.5-19 Electrical Single Line Diagram Overall System Utility Substation and 13 kV Distribution (Sheet 1 of 6)
Figure 3.5-19 Electrical Single Line Diagram Overall System Central Utilities Normal Loads (Sheet 2 of 6)
Figure 3.5-19 Electrical Single Line Diagram Overall System Short Break and UPS Power (Sheet 3 of 6)
Figure 3.5-19 Electrical Single Line Diagram Overall System Normal Loads (Sheet 4 of 6)
Figure 3.5-19 Electrical Single Line Diagram Overall System Cascade Hall – Variable Frequency Drives (Sheet 5 of 6)
Figure 3.5-19 Electrical Single Line Diagram Overall System Services – Normal Loads (Sheet 6 of 6)
Figure 3.5-20 Process Flow Diagram Compressed Air System (Sheet 1 of 2)
Figure 3.5-20 Process Flow Diagram Compressed Air Distribution (Sheet 2 of 2)
Figure 3.5-21 Process Flow Diagram Process Water Distribution System
Figure 3.5-22 Process Flow Diagram DI Water Supply and Distribution System
Figure 3.5-23 Process Flow Diagram Boilers and Hot Water Distribution System
Figure 3.5-24 Process Flow Diagram HVAC Cooling Water System Chillers/Pumps

LIST OF FIGURES

Figure 3.5-25 Process Flow Diagram HVAC Cooling Tower Water System Cooling Towers and Pumps (Sheet 1 of 2)
Figure 3.5-25 Process Flow Diagram Centrifuge Cooling Water System Cooling Towers and Pumps (Sheet 2 of 2)
Figure 3.5-26 Process Flow Diagram Centrifuge Cooling Water Distribution System
Figure 3.5-27 Plant Control System Central Control System (Sheet 1 of 3)
Figure 3.5-27 Plant Control System Local Control System (Sheet 2 of 3)
Figure 3.5-27 Plant Control System Local Control System (Sheet 3 of 3)
Figure 3.5-28 Process Flow Diagram Nitrogen System (Sheet 1 of 3)
Figure 3.5-28 Process Flow Diagram Gaseous Nitrogen System (Sheet 2 of 3)
Figure 3.5-28 Process Flow Diagram Gaseous Nitrogen System (Sheet 3 of 3)
Figure 3.5-29 Liquid Effluent Collection and Treatment Room Equipment Arrangement
Figure 3.5-30 Process Flow Diagram Spent Citric Acid
Figure 3.5-31 Process Flow Diagram Degreaser Water
Figure 3.5-32 Process Flow Diagram Miscellaneous Effluent
Figure 3.5-33 Process Flow Diagram Laundry Effluent
Figure 3.5-34 Process Flow Diagram Hand Wash/Shower Effluent
Figure 3.5-35 Process Flow Diagram Precipitation/Treatment
Figure 3.5-36 Process Flow Diagram Evaporator/Dryer
Figure 3.5-37 Process Flow Diagram Treated Effluent Polishing
Figure 3.5-38 Decontamination Workshop Equipment Arrangement
Figure 3.5-39 Process Flow Diagram Equipment Decontamination System
Figure 3.5-40 Process Flow Diagram Decontamination System for Sample Bottles
Figure 3.5-41 Process Flow Diagram Decontamination System for Flexible Hoses
Figure 3.5-42 Process Flow Diagram Fomblin Oil Recovery System
Figure 3.5-43 Piping & Instrumentation Diagram Cylinder Pressure Test & Pump Out
Figure 3.5-44 Process Flow Diagram Cylinder Preparation Vacuum Pump and Trap Set System (Sheet 1 of 2)
Figure 3.5-44 Process Flow Diagram Cylinder Preparation Vacuum Pump and Trap Set System (Sheet 2 of 2)

3.5 UTILITY AND SUPPORT SYSTEMS

Louisiana Energy Services' (LES) National Enrichment Facility (NEF) utility and support systems are described in this section. The information provided for each system emphasizes capacities, redundancies, and other provisions for coping with routine and non-routine events.

The Separations Building consists of three units called Separations Building Modules. Some of the utility and support systems are duplicated in each Separations Building Module while other systems serve the entire facility. The descriptions and flow diagrams of duplicated systems presented in this section represent Separations Building Module 1 systems, which are generally identical in Separations Building Modules 2 and 3. Any differences are clearly indicated in the text and figures.

The system descriptions provided for each system include functional requirements, design capacities, system interfaces, and descriptions of major components. In addition, operational characteristics are discussed for both routine operations and non-routine operations. Supporting information is provided in the form of flow diagrams to facilitate an understanding of the system design.

Finally, safety considerations are described for each system. The health and safety of the public are protected such that a failure or inadvertent operation of any of the utility systems would not result in a release of hazardous quantities of chemicals or radiation. The basis for this conclusion is presented in the Integrated Safety Analysis Summary provided in Section 3.7, General Types of Accident Sequences, and Section 3.8, Items Relied on for Safety (IROFS).

Although many of the utility and support systems do not contain items relied on for safety, appropriate design and operating features that enhance public safety, worker safety, and facility reliability are provided for each system. The Codes and Standards generally applicable to the utility and support systems are listed in Table 3.5-1, Codes and Standards.

In the following sections, the design process parameter values are specified with a datum of standard atmospheric pressure at sea level. These values will be finalized to reflect the site-specific NEF elevation during the design phase and the Safety Analysis Report will be revised accordingly.

3.5.1 Building Ventilation

The Separations Building is partitioned into three Separations Building Modules. Each Separations Building Module has dedicated Heating, Ventilating, and Air Conditioning (HVAC) systems. These areas are as follows:

A. Cascade Hall

B. Low Voltage and Transformer Rooms

C. Process Services Corridors

D. Link Corridor

E. UF_6 Handling Area.

Adjacent to the Separations Building Modules are areas and buildings where other services are performed. These areas, listed below, also have dedicated HVAC systems:

A. Blending and Liquid Sampling Area

B. Cylinder Receipt and Dispatch Building (CRDB).

C. Centrifuge Assembly Building (CAB)

D. Technical Services Building (TSB)

Separate buildings at the facility have dedicated HVAC systems. These buildings are as follows:

A. Security Buildings

B. Administration Building

C. Central Utilities Building (CUB)

The individual HVAC systems are designed to maintain the specific environmental conditions associated with processes undertaken within a particular area. In areas where there is a potential for radioactive contamination, the areas are maintained at a slightly negative pressure relative to the surrounding areas. All of the floor plans for the above areas are shown on Figures 3.3-2 through 3.3-18. The flow diagrams for the HVAC systems for the above areas (with the exception of the Security Building and the Administration Building) are shown on Figures 3.5-1 through 3.5-18.

Although the individual HVAC systems have unique inside design parameters, the outside design environmental conditions are the same for every HVAC system. The outside design parameters are as follows:

Summer:	38.3°C (101°F) dry bulb, 18.9°C (66°F) wet bulb (process areas)
	36.1°C (97°F) dry bulb, 18.9°C (66°F) wet bulb (office areas)
Winter:	-10.6°C (13°F)
Wind Velocity:	Maximum 9.9 m/s (22 mph)

3.5.1.1 System Descriptions

The specific design features for each HVAC system are described in this section.

3.5.1.1.1 Cascade Halls

There are no HVAC systems or HVAC equipment associated with the Cascade Halls. The Cascade Halls are confined areas that contain the centrifuges. Air is not circulated in the Cascade Halls. The heat generated from the Cascade Halls is removed by the Centrifuge Cooling Water distribution piping.

The conditions in the room are maintained as follows:

Room Temperature	33°C ± 1°C (91.4°F ± 2°F)
Relative Humidity	40% Design point

3.5.1.1.2 Electrical Room HVAC System

The first floor Electrical Room HVAC System in each Separations Building Module maintains room temperature in the Low Voltage and Transformer Rooms. The HVAC system consists of one, 100% capacity air handling unit (AHU), with two, 100% capacity supply fans, and two, 100% capacity return/exhaust fans. The Electrical Room HVAC System is shown on Figure 3.5-1, Flow Diagram, Separation Building Module, First Floor Electrical Room, HVAC System.

The environmental design parameters for the Low Voltage and Transformer Rooms are provided below:

Room Temperature	26.5°C (80°F) max, 18.0°C (65°F) min
Relative Humidity	40% Design point

A majority of the area ventilation air is recirculated and the remaining air is discharged to the atmosphere. The Low Voltage and Transformer Rooms are maintained at neutral pressure by balancing the supply flow rate with leakage, exhaust, and recirculation airflow rates.

3.5.1.1.3 Process Services Area HVAC System

The Process Services Area HVAC System in each Separations Building module maintains room temperature in the Process Services Area.

The first, second, and third floor process services area HVAC system consists of eight, 12.5% capacity AHUs per Separations Building Module and eight, 12.5% exhaust/return fans per Separations Building Module. The system components are shown on Figure 3.5-4, Flow Diagram Process Service Areas, First, Second and Third Floor, HVAC System.

The environmental control design parameters for the Process Services Areas HVAC system are provided below:

Room Temperature	25°C (77°F) max, 18°C (65°F) min
Relative Humidity	40% Design point

A majority of the area ventilation air is recirculated, and the remaining air is discharged to the atmosphere. The Process Service Areas are maintained at neutral pressure by balancing the supply flow rate with leakage, exhaust and recirculation airflow rates.

3.5.1.1.4 Link Corridor HVAC System

The “Link” Corridor Area HVAC System maintains room temperature in the “Link” corridor. The “Link” first and second floor HVAC system consists of two, 50% capacity AHUs for both floors and two, 50% exhaust/return fans. The system components are shown on Figure 3.5-2, Flow Diagram, “Link” Corridor First and Second Floor, HVAC System.

The environmental control design parameters for the “Link Corridor” Areas HVAC system are provided below:

"Link Corridor"

Room Temperature	25°C (77°F) max, 18°C (65°F) min
Relative Humidity	40% Design point

3.5.1.1.5 Above Cascade Area HVAC System

The Above Cascade Area HVAC System maintains room temperature in the Above Cascade Area. The HVAC system consists of two, 100% AHUs for each Cascade Hall (four AHUs per Separations Building Module) and two, 100% exhaust/return fans for each Cascade Hall (four fans per Separations Building Module). The system components are shown on Figure 3.5-3, Flow Diagram, Process Services Area Above Cascade, HVAC System.

The environmental control design parameters for the Above Cascade Area HVAC System are provided below:

Above Cascade Area:

Room Temperature	32°C (89.6°F) max, 18°C (65°F) min
Relative Humidity	40% Design point

3.5.1.1.6 UF_6 Handling Area HVAC System

The UF_6 Handling Area HVAC System in each Separations Building Module maintains the air temperature in the UF_6 Handling Area. The HVAC system is comprised of three, 33% capacity AHUs per Separations Building Module and three, 33% exhaust/return fans per Separations Building Module. The UF_6 Handling Area HVAC System flow diagram is shown on Figure 3.5-5, Flow Diagram, UF_6 Handling Area HVAC System.

The environmental control design parameters for the UF_6 Air Handling HVAC System are given below:

Room Temperature	25°C (77°F) max, 18°C (65°F) min
Relative Humidity	40% Design point

A majority of the ventilation air is recirculated, and the remaining air is discharged to the atmosphere. The UF_6 Handling Area is maintained at neutral pressure by balancing the supply flow rate with leakage, exhaust and recirculation airflow rates.

3.5.1.1.7 Blending and Liquid Sampling Area HVAC System

The Blending and Liquid Sampling Area HVAC System maintains the room temperature in the Blending and Liquid Sampling Area. The HVAC system consists of two, 50% capacity AHUs and two, 50% capacity return / exhaust fans. The Blending and Liquid Sampling Area HVAC System flow diagram is shown on Figure 3.5-6, Flow Diagram, Blending and Liquid Sampling Area HVAC System.

The environmental control design parameters for the Blending and Liquid Sampling Area HVAC System are provided below:

Room Temperature	25°C (77°F) max, 18°C (65°F) min
Relative Humidity	40% Design point

A majority of the area ventilation air is recirculated back to the AHUs, and the remaining air is discharged to the atmosphere.

The ventilation system for the Blending and Liquid Sampling Area is designed to maintain the area at neutral pressure by balancing the supply flow rate with leakage, exhaust and recirculation airflow rates.

3.5.1.1.8 Technical Services Building HVAC System

The TSB HVAC System maintains the room temperature in the clean areas, potentially contaminated areas, laboratories, locker rooms, link corridors, general offices, break room, storage areas and the Control Room.

The potentially contaminated rooms include the Decontamination Workshop, Cylinder Preparation Room and Ventilated Room. The HVAC system for these rooms consists of two, 50% capacity AHUs. Airflow from the potentially contaminated rooms is exhausted through two, 50% capacity Bag-In/Bag-Out high efficiency particulate air (HEPA) filters by one of two, 100% capacity filtration exhaust fans. The exhaust air is then discharged to the exhaust stack and monitored for alpha radiation and hydrogen fluoride (HF). Some potentially contaminated areas have fume hoods, which are connected to the TSB GEVS. The TSB HVAC System flow diagram is shown in Figure 3.5-7, Flow Diagram, TSB Contaminated Workshop HVAC System.

The noncontaminated areas include the TSB GEVS Room, Laundry, Mechanical/Electrical & Instrumentation (ME&I) Workshop, Solid Waste Collection Room (SWCR), Vacuum Pump Rebuild Workshop, and Liquid Effluent Collection and Treatment Room. The HVAC system consists of two 50% capacity AHUs. Airflow from the clean areas is returned/exhausted by two 50% capacity return/exhaust fans. A majority of the ventilation air from the clean areas is recirculated, and the remaining air is discharged through the exhaust stack. The Vacuum Pump Rebuild Workshop and ME&I Workshop are provided with a general exhaust system and discharged to the atmosphere. The system flow diagram is shown on Figure 3.5-8, Flow Diagram, TSB Noncontaminated Areas HVAC System.

The locker rooms, access corridors, first and second floor offices, break room, and storage rooms HVAC system consists of one 100% capacity AHU with two 50% capacity supply air fans, and two 50% capacity return/exhaust fans. The Control Room HVAC system consists of two 100% capacity computer room AC units. The system flow diagram is shown on Figure 3.5-9, Flow Diagram, TSB Offices and Control Room HVAC system.

The Chemical, Mass Spectrometry, and Environmental Monitoring Laboratory HVAC systems consists of one, 100% capacity AHU with two, 100% capacity supply air fans, and two, 100% capacity exhaust fans. The ventilation air is discharged to an exhaust stack. The Environmental Laboratory is designed to be at a positive pressure to the surrounding rooms while the Mass Spectrometry and Chemical Laboratories are maintained at a negative pressure with respect to the surrounding rooms. The system components are shown on Figure 3.5-10, Flow Diagram TSB Labs HVAC System.

The environmental control design parameters for the Technical Services Building are as follows:

A. Cylinder Preparation Room, Ventilated Room, and Decontamination Workshop

Room Temperature	30°C (86°F) max/18°C (65°F) min
Relative Humidity	40% Design point

B. Chemical, Mass Spectrometry, and Environmental Monitoring Laboratories

Room Temperature	Year Round 21°C ± 1°C (70°F ± 1.8°F)
Relative Humidity	40% max

C. ME&I Workshop, Solid Waste Collection Room, Vacuum Pump Rebuild Workshop, Laundry, and TSB GEVS Room and Liquid Effluent Collection and Treatment Room Areas

Room Temperature	30°C (86°F) max/18°C (65°F) min
Relative Humidity	40% Design point

D. First and Second Floor Offices and Break Area

Room Temperature	Year Round 22°C ± 2°C (72°F ± 3.6°F)
Relative Humidity	40% Design point

E. Locker Rooms

Room Temperature	Year Round 22°C ± 2°C(72°F ± 3.6°F)
Relative Humidity	40% Design point

F. Control Room

Room Temperature	Year Round 22°C ± 2°C (72°F ± 3.6°F)
Relative Humidity	40% Design point

G. Clean Storage Areas and Truck Bay/Shipping & Receiving Area

Room Temperature	40°C (104°F) max/7°C (45°F) min
Relative Humidity	40% Design point

H. Miscellaneous Support Areas

Room Temperature	40°C (104°F) max/7°C (45°F) min
Relative Humidity	40% Design point

I. Truck Bay

Room Temperature	40°C (104°F) max/7°C (45°F) min
Relative Humidity	40% Design point

Exhaust from the potentially contaminated rooms of the TSB is filtered by the TSB GEVS. The GEVS utilizes fume hoods or exhaust enclosures with a combination HEPA and activated carbon filters. See Section 3.4.9, Gaseous Effluent Vent Systems, for a description of the GEVS.

The confinement function of the HVAC in the TSB is designed to maintain the clean areas at positive room pressure and the potentially contaminated areas at slightly negative room pressure. The pressurization zones in the TSB are shown on Figure 3.5-11, Code and Area Classifications, Technical Services Building, HVAC Pressurization. This ensures that the airflow

direction is from areas of little or no potential for contamination to areas of higher potential for contamination. Pressure zones are controlled by adjusting the filtered exhaust airflow rate and the supply airflow rate accordingly. Also, appropriate access controls are provided to maintain proper airflow patterns.

Exhaust flow from the potentially contaminated rooms (i.e., Ventilated Room, Cylinder Preparation Room and Decontamination Workshop) of the TSB is filtered by a pre-filter, activated carbon filter and HEPA filter and is then released through an exhaust stack. The exhaust stack flow is continuously monitored for alpha and HF. The stack exhaust is periodically sampled. The continuous monitoring and periodic sampling is in accordance with the guidance in Regulatory Guide 4.16 (NRC, 1985). In addition to the confinement function provided by the HVAC system for these rooms, the TSB GEVS provides filtered exhaust for potentially hazardous contaminants via fume hoods and flexible connections for the following areas: Ventilated Room, Laundry, Decontamination Workshop, Chemical Laboratory, Mass Spectrometry Laboratory, Cylinder Preparation Room, Vacuum Pump Rebuild Room and Solid Waste Collection Room. The GEVS is described in more detail in Section 3.4.9, Gaseous Effluent Vent System.

The ventilation system for the Break Room and Office Areas is designed to maintain the Control Room and Offices at slightly positive pressure to minimize the infiltration of dust and other undesirable airborne materials. This is accomplished by adjusting the supply flow rate greater than the exhaust and recirculation airflow rates. Double door entrances and/or vestibules are incorporated to help maintain pressure control.

The ventilation system for the locker area will be designed to maintain a slight negative pressure by maintaining exhaust airflow rate greater than the supply airflow rate.

The remainder of the area is maintained at atmospheric pressure. No special design features are incorporated to attain pressure control in these areas.

3.5.1.1.9 Centrifuge Assembly Building HVAC System

The Centrifuge Assembly Building (CAB) HVAC System maintains room temperature in the Centrifuge Assembly Building.

The Centrifuge Component Storage Area HVAC System consists of two, 50% capacity AHUs and two 50% exhaust/return fans. The system flow diagram is shown on Figure 3.5-12, Flow Diagram, CAB Centrifuge Component Storage Area, HVAC System.

The Centrifuge Test and Post Mortem Areas HVAC System consists of two, 50% capacity AHUs and two, 50% capacity return/exhaust fans. The system serves the Assembled Centrifuge Storage Area, Electrical Battery Charger Area, and the Centrifuge Test and Post Mortem Areas. The Centrifuge Post Mortem area confinement ventilation function incorporates an 85% efficient prefilter, activated carbon filters, and a 99.97% efficient HEPA Bag In/Bag Out filtration subsystem that continuously filters exhaust air and discharges to the exhaust stack. This subsystem is designed to operate in a once-through configuration. The subsystem flow diagram is shown on Figure 3.5-13, Flow Diagram, CAB Centrifuge Storage and Miscellaneous Areas, HVAC System. In addition to the confinement function for the Centrifuge Post Mortem Facility, filtered exhaust from this room via a flexible connection and a fume hood is provided by the Centrifuge Test and Post Mortem Facilities Exhaust Filtration System. This system also provides filtered exhaust from the Centrifuge Test Facility via two flexible connections. The

description of this system is provided in Section 3.4.10.3, Centrifuge Test and Post Mortem Facilities Exhaust Filtration System.

The Office Area HVAC System consists of one, 100% capacity AHU with two, 50% capacity supply air fans, and two, 50% capacity return/exhaust fans. The system serves the offices, canteen, change areas, and entrance areas. The system flow diagram is shown on Figure 3.5-14, Flow Diagram, CAB Offices and Miscellaneous Rooms, HVAC System.

The Centrifuge Assembly Area HVAC System consists of four, 25% capacity AHUs and 12 recirculation AHUs to provide a Class 100,000 Clean Room environment. Ceiling mounted Terminal HEPA filters are provided. The return/exhaust system consists of four, 25% return/exhaust fans. The system flow diagram is shown on Figure 3.5-15, Flow Diagram, CAB Centrifuge Assembly Area, HVAC System.

The environmental control design parameters for the CAB HVAC Systems are provided below:

A. Centrifuge Component Storage Area.

Room Temperature	33°C (95°F) max, 18°C (65°F) min
Relative Humidity	40% Design point

B. Assembled Centrifuge Storage Area, Centrifuge Test and Post Mortem Area.

Room Temperature	25°C (77°F) max, 18°C (65°F) min
Relative Humidity	40% Design point

C. Centrifuge Assembly Area.

Room Temperature	25°C (77°F) max, 18°C (65°F) min
Relative Humidity	40% Design point

D. Canteen, Offices, Maintenance, Airlock, Change Area.

Room Temperature	Year Round 22°C ± 2°C (72°F ± 3.6°F)
Relative Humidity	40% Design point

3.5.1.1.10 Cylinder Receipt and Dispatch Building Heating and Ventilation System

The Cylinder Receipt and Dispatch Building (CRDB) Heating and Ventilating System maintains room temperature in the CRDB. The HVAC system consists of ten 10% capacity AHU's and ten 10% capacity return/exhaust fans. The system components are shown on Figure 3.5-16, Flow Diagram, Cylinder Receipt and Dispatch Building, HVAC System.

The environmental control design parameters for the CRDB HVAC System are provided below:

Room Temperature	35°C (95°F) max/18°C (65°F) min
Relative Humidity	40% Design point

A majority of the area ventilation air is recirculated, and the remaining air is discharged to the atmosphere. The CRDB is maintained at neutral pressure by balancing the supply flow rate with leakage, exhaust, and recirculation airflow rates.

3.5.1.1.11 Security Building HVAC System

The Security Building HVAC System maintains temperature in the Security Building.

The Security Building HVAC System consists of one packaged or split Direct Expansion system unit with one constant volume supply fan. The ventilation system for the Security Building is designed to maintain the Security Building at slightly positive pressure to minimize the infiltration of dust and other undesirable airborne materials.

The environmental control parameters for the Security Building HVAC System are provided below.

Room Temperature	Year Round 22°C ± 2°C (72°F ± 3.6°F)
Relative Humidity	40% Design point

A majority of the building ventilation air is recirculated, and the remaining air will leak through exfiltration.

3.5.1.1.12 Administration Building HVAC System

The Administration Building HVAC System maintains temperature in the Administration Building.

The Administration Building HVAC System consists of one Packaged Variable Volume Rooftop unit with one supply fan and one return fan. Each zone is provided with a variable air volume (VAV) box with electric heat. The Administration Building HVAC System flow diagram is shown on Figure 3.5-17, Flow Diagram, Administration Building, HVAC System.

The Administration Building HVAC System is designed to maintain the Administration Building at a slightly positive pressure to minimize infiltration of dust and other undesirable airborne materials.

The environmental control parameters for the Administration Building HVAC System are provided below.

Room Temperature	Year Round 22°C ± 2°C (72°F ± 3.6°F)
Relative Humidity	40% Design point

A majority of the building ventilation air is recirculated, and the remaining air is discharged through exfiltration and toilet exhaust fans.

3.5.1.1.13 Central Utilities Building HVAC System

The Central Utilities Building (CUB) HVAC System provides environmental control in the CUB. The CUB consists of the following rooms: Standby-Diesel Generator Room, Air Compressor Room, Boiler Room, Chiller Room and multiple Electrical Rooms.

The Mechanical Rooms are air conditioned and heated by two 50% capacity AHUs and five 20% exhaust fans. The cooling water facility has additional emergency ventilation with refrigerant leak detection. The system serving the Stand-by Diesel Generator Room does not maintain conditions when generators are running. The Boiler Room is provided with two fixed wall intake openings for boiler combustion air. The Electrical Rooms are air conditioned and

heated by two 50% capacity AHUs. The system components are shown on Figure 3.5-18, Flow Diagram, Central Utilities Building, HVAC system.

The environmental control parameters for the CUB HVAC System are provided below:

Electrical Room:

Room Temperature	26.5°C (80°F) max/18.3°C (65°F) min
Relative Humidity	40% Design point

Boiler, Chiller, Air Compressor and Stand-By Diesel Generator Rooms:

Room Temperature	35°C (95°F) max/7°C (45°F) min
Relative Humidity	No Control

The ventilation system for the CUB Area is designed to maintain the CUB Area at neutral pressure by balancing the supply flow rate with leakage and exhaust.

3.5.1.2 Major Components

The major components for each ventilation system are detailed above in Section 3.5.1.1, System Description.

3.5.1.3 System Interfaces

All of the HVAC systems interface with the utility systems listed below.

A. The Hot Water System provides hot water to heating coils in the AHUs and the duct heating coils and returns the water to the hot water boilers.

B. The HVAC Chilled Water System provides chilled water to the cooling coils in the AHU and returns the water to the facility chillers in the cooling water facility.

C. The Compressed Air System provides instrument air to pneumatic control components.

D. The Electrical System provides electrical power to HVAC system components.

E. The Plant Control System provides limited monitoring and alternative start/stop control for the HVAC system.

3.5.1.4 Operational Characteristics

All of the HVAC systems are operated from local control panels. Start/stop controls, group alarms, and system status are provided in the Control Room. The operation of the AHU supply fans is interlocked with the return/exhaust fans to ensure that either neutral, slightly positive or slightly negative pressure is maintained depending on the specific area.

3.5.1.4.1 Routine Operation

After a start signal has been provided, one AHU supply fan starts. When flow through the supply fan has been established, one return/exhaust fan is started. When air flow in the room is established, the second supply fan is started, followed by the remaining exhaust fan.

Temperature control in all areas is maintained by sensing the return air temperature, the outside air temperature, and the air handling unit leaving air temperature. Modulating the position of the outside air, return air, and relief air control dampers, and appropriate water flow rate controls the room air temperature.

When the outside air temperature is above 7.2°C (45° F), the outside air, return air, and relief air damper are positioned to maintain the mixed air temperature entering the AHU as close to 11.1°C (52°F) as possible. As the outside air temperature increases toward design limits, the outside air damper closes to minimum position. The room or area air temperature is controlled by modulation of the chilled water flow rate.

When the outside air temperature is below 7.2°C (45°F), the outside air, return air, and relief air dampers are at the minimum position and the room air temperature is controlled by modulation of the hot water flow rate. The position of the relief air damper control dampers are set to match the position of the outside air control dampers so that airflows are matched and the proper amount of air is recirculated back to the unit.

The supply fan capacity is controlled by modulating the fan inlet vane control damper to maintain constant static pressure in the supply duct. The return/exhaust air flow is maintained constant by modulating the fan inlet vane control damper.

3.5.1.4.2 Non-routine Operation

Component failures would result in reduced system capacity but would not affect facility safety. A failure would be indicated and alarmed in the Control Room. The consequences of assumed failure modes are discussed below:

A. AHU Failure. An AHU failure could result in a temperature excursion in the area. An AHU failure could cause the remaining AHUs flow control valves to open and the outside air control dampers to close on the travel stops. Note that the temperature excursion is more severe in HVAC systems that have only one AHU.

B. Supply Fan Failure. A supply fan failure could result in temperature or pressure excursion in the area. A single fan failure could cause a return/exhaust fan to automatically shut down, the remaining supply fan inlet vane control damper to open fully, and the appropriate temperature control devices to open fully.

C. Return/Exhaust Fan Failure. A return/exhaust fan failure could result in a pressure excursion in the area. A single return/exhaust fan failure would cause the supply fan's inlet vane control damper to adjust to a stable operating position.

D. Control System or Electrical System Failure. A general failure of the Control System or Electrical System could lead to a total loss of ventilation due to erroneous trips or false operation.

3.5.1.5 Safety Considerations

The total failure of an HVAC system could be caused by natural phenomena, loss of offsite power, or loss of the control system. This failure could result in temperature and pressure increases or decreases in the affected area, and would be detected by flow and temperature

measurements. Failure of any of the HVAC systems would not endanger the health or safety of workers and the public.

In the event of a seismic event the HVAC system will automatically shutdown through the control system. This will minimize any exhaust release from the building due to the seismic event.

During release of UF_6, HVAC Systems would be shut down in the affected area. This would limit the spread and release of airborne materials from the area. The hydrogen fluoride (HF) concentration would increase in the affected area, and un-reacted UF_6 and uranyl fluoride (UO_2F_2) would settle out in the area.

In the unlikely event of such an incident, operators would put on an air suit and re-enter the affected area to isolate the source of the release. It is not possible to give specific conditions that need to be met before the HVAC systems are restarted as every incident would be subject to a separate assessment involving senior management. In general, however, the aim is to clean up, collect and package all escaped uranic material before the HVAC systems are switched on again. No specific action is envisioned with regard to the HF associated with any release, as this would probably disperse through natural room leakage during the time uranic clean-up operations were underway. The filtered exhaust will continue to operate to limit the spread of airborne materials from the area.

IROFS associated with the HVAC systems are listed below.

- Separations Building HVAC System trip following a seismic event. This hard wired single train, fail-safe, feature functions to isolate the UF_6 Handling Area, Process Service Area, Cascade Halls, and Blending and Liquid Sampling Area from the outside environment to mitigate releases to the public. (IROFS 26)

For a complete listing of IROFS, see Section 3.8, Items Relied on for Safety (IROFS).

3.5.2 Electrical System

The NEF overall electrical power distribution system is designed with a high level of redundancy to maintain a reliable power supply to the process equipment for investment protection. Total loss of electrical power does not have any safety implications.

3.5.2.1 System Description

The system is illustrated in Figure 3.5-19, Electrical Single Line Diagram, Overall System (Sheets 1 through 6). The Electrical System design complies with the following codes and standards.

- IEEE C2-2002, National Electrical Safety Code (IEEE, 2002)
- NFPA 70, National Electric Code (NFPA, 1996)
- NFPA 70E, Standard for Electrical Safety Requirements for Employee Workplaces (NFPA, 2000).

3.5.2.1.1 Incoming Power Source

The main source of supply of electrical power for the facility is derived by means of two synchronized 115 kV overhead transmission lines from an extended ring bus loop in the Xcel Energy system grid. Each line is rated to supply the total power requirements of the facility.

The 115 kV lines power the utility substation provided by Xcel Energy for the facility service. Duplicate transformers are used in the substation to transform the 115 kV to 13 kV for the facility electrical power distribution system. Each transformer can be supplied from either 115 kV line and is rated to supply the total power requirements of the facility.

The average power requirement and the peak power requirement of the facility are approximately 30.3 MVA and 32 MVA, respectively.

3.5.2.1.2 Overall Site Power Distribution

The Xcel Energy substation transformers supply duplicate sets of 13 kV switchgear that distribute power to the site substation transformers. Either of the duplicate switchgears can be supplied from either of the Xcel Energy transformers. Each feeder circuit from the 13 kV switchgear to the site substation transformers has a connection to both switchgears and can be supplied from either switchgear. The site substation transformers convert the 13 kV supply voltage to the voltages needed for utilization in the facility.

3.5.2.1.3 Onsite Power Sources

Standby Diesel Generators are provided to power equipment that can tolerate a short break (short break load) in the normal power supply. This capability is needed to allow for an orderly shutdown of the facility. Each of the Standby Diesel Generators is sized for 100% of the short break load requirement of the equipment to which it is connected. The Standby Diesel Generators are not required for safety operation of the facility and are installed to provide protection of investment only.

Uninterruptible Power Supply (UPS) systems are provided to power the facility process equipment that does not tolerate a break (no break load) in the normal power supply. Input power for this UPS system is normally provided by the short break power system with backup from the Standby Diesel Generators. Batteries power the UPS if all other input power is lost. Each of the UPS systems is sized for 100% of its connected load.

Additional UPS systems with battery backup are installed to provide no break power to support systems such as emergency lighting. These systems are sized and located as necessary to provide the requirements of the equipment served. Systems requiring no break power are listed in Section 3.5.2.4, Operating Characteristics.

Duplicate batteries supply operating power for the 13 kV and 4160 V switchgear.

Additional batteries provide starting power for each Standby Diesel Generator and operating power for each UPS system.

3.5.2.2 Major Components

The following are the major electrical distribution system components:

A. 115 kV – 13 kV Utility Substation. The utility substation provided by Xcel Energy will consist of 115 kV circuit breakers and switches; two, 115 kV to 13 kV Load Tap Changer (LTC) transformers; and two, 13 kV breakers to provide the dual 13 kV regulated sources for the facility.

   Dual incoming power supply lines are used to assure continuous power supply to the facility. Each line can provide the total power requirement for facility operation.

   Duplicate transformers are used to transform the 115 kV to 13 kV for the site electrical power distribution system. Each transformer can be supplied from either line and is rated to supply the total power requirements of the facility. To offset the voltage variations in the two incoming 115 kV lines, the transformers are equipped with automatic LTC equipment that maintains the facility supply voltage at the rated value.

B. 13 kV Visible Blade Disconnect Switches. Visible blade 13 kV disconnect switches are provided at the points of interconnection between the utility substation supply circuits and the facility distribution system. These switches provide visual verification of the isolation of the two systems for maintenance or repair.

C. 13 kV Switchgear. The 13 kV medium voltage distribution system consists of duplicate switchgears. Both switchgears can be supplied from either utility transformer, and the two switchgear lineups can be connected together by means of tie breakers.

   Each 13 kV switchgear consists of a main bus, dual main input breakers, a tie breaker and feeder breakers. Each breaker in one lineup has a corresponding breaker in the other lineup.

D. 13 kV Feeder Circuits. 13 kV feeder circuits supplied from dual breakers provide power to the distribution system transformers.

E. 4160 V Switchgear. The 4160 V distribution system consists of two switchgear lineups. These switchgears are supplied from two 13 kV to 4160 V transformers. These switchgears can be supplied from either transformer and can be connected together by means of tie breakers.

F. 480 V Switchgear. Two sets of 480 V, 3-phase, 60 Hz, switchgear are provided to supply normal load power for central utilities, the support services, the Separations Building and each of the six Cascade Halls. Loads will generally have a dedicated connection to either the A or B supply. Some loads are provided with selectable connection to either the A or B supply.

   Each Separations Building Module has two double-ended switchgears to supply variable frequency drive equipment. Separations Building Module 1 switchgears are each fed from dedicated transformers. A common standby transformer serves both system's standby switchgears. Arrangement of the variable frequency drive system in Separations Building Module 2 and Separations Building Module 3 is identical to Separations Building Module 1.

G. Short Break Load System. The short break load 480 V distribution system originates with duplicate switchgears. These switchgears are normally supplied from one of two,

13 kV to 480 V transformers, with either switchgear capable of being supplied from either transformer. Each switchgear can also be supplied by a designated Standby Diesel Generator.

The short break load distribution system supplies power to equipment listed in Section 3.5.2.4.

H. Standby Diesel Generators. Duplicate Standby Diesel Generators supply standby power for the short break load system. Each Standby Diesel Generator supplies a designated switchgear.

I. Process UPS (No Break) System. Two battery backed UPS units provide power for the process no break loads. Normal input power to the UPSs is from the diesel generator backed up short break switchgear lineups. The batteries power the UPSs if all normal input power is lost. Each UPS is sized for 100% of it's connected load.

The process UPS no break load distribution system supplies power to equipment listed in Section 3.5.2.4.

3.5.2.3 Interfaces

The Electrical System interfaces with the Plant Control System (PCS) for monitoring only. The Electrical System signals are centralized in the 13 kV switchgear room and re-transmitted to the PCS.

The following electrical systems are monitored by the PCS.

A. 115 kV – 13 kV Utility Substation

B. 13 kV Switchgear

C. 4.16 kV Switchgear

D. 480/460 V Switchgear

E. Standby Diesel Generators

F. UPS Systems.

3.5.2.4 Operating Characteristics

The facility process load requirements are categorized as follows:

Normal Loads

All normal load equipment is fed from electrical distribution equipment which is not backed-up by either the Standby Diesel Generators or the UPSs. The normal load power distribution equipment is served by the duplicate 115 kV lines, duplicate main transformers and duplicate 13 kV switchgear.

Short Break Loads

The following equipment is supplied power from the short break power distribution system described in Section 3.5.2.2, Major Components.

A. Product Take-off System and Tails Take-off System pump sets

B. Hot air blowers on Low Temperature Take-off Stations

C. Fan motors in the GEVS

D. Contingency Dump Vacuum Pump/Trap Sets

E. Process UPS systems

F. Diesel fuel tank pump motors for the Standby Diesel Generators

G. Air compressor and dryer for instrument air

H. Separations Building GEVS

I. Power outlets for mobile pump sets

Process UPS / No Break Loads

The following equipment is supplied power from the Process UPS/no break power distribution system described in Section 3.5.2.2:

A. Plant Control System

B. Process Instruments.

Support Systems UPS / No Break Loads

The following equipment is supplied power from individual UPS units located, sized and equipped with batteries meeting the requirements of the equipment supplied.

A. Emergency Lighting

B. Site Communications System

C. Environmental Monitoring.

3.5.2.4.1 Routine Operations

3.5.2.4.1.1 115 kV - 13 kV Utility Substation

Under normal circumstances both 115 kV incoming lines are in service, synchronized and connected together supplying both 115 -13 kV transformers. Both 115 -13 kV transformers and both 13 kV breakers are in service with each supplying approximately one half the facility load.

The 115-13 kV transformers automatic LTC equipment monitors and maintains the required supply voltage.

3.5.2.4.1.2 13 kV Distribution System

The 13 kV visible blade disconnect switches A and B are normally closed.

Utility 115 -13 kV transformer A is normally connected to the facility 13 kV switchgear bus A and utility 115 -13 kV transformer B is normally connected to the facility 13 kV switchgear bus B. The

alternate connection breakers between the utility transformers and the facility 13 kV switchgear buses are normally open.

The tie breakers between 13 kV switchgear bus A and 13 kV switchgear bus B are normally open.

Each 13 kV site distribution feeder circuit is supplied from one breaker on bus A and one breaker on bus B. One of these breakers is normally closed and the other breaker is normally open.

The Electrical System is monitored in the Control Room by the Plant Control System to which all alarm conditions and status indications are transmitted.

3.5.2.4.1.3 Plant 480/460 V Distribution System

The 480/460 V power is derived from the 13 kV system through the 13 kV-480/460 V step-down transformers and is distributed through 480/460 V power distribution equipment. All step-down transformers are normally in service.

The normal load system 480/460 V switchgear is run with all normal supply breakers closed and all alternate supply breakers open. Where selection switches are provided, loads are selected to the A or B system to achieve load balance.

The short break load 480/460 V switchgear is run with the circuit breakers from the A transformer to the A switchgear and B transformer to the B switchgear closed and with the circuit breakers from the A transformer to the B switchgear and the B transformer to the A switchgear open. The breakers on both generators to the respective switchgear are normally open. Sub-distribution equipment is operated with incoming breakers closed. Where sub-distribution selection switches are provided, load is selected to the A or B system to achieve load balance.

3.5.2.4.1.4 Standby Diesel Generators

Under normal circumstances, the Standby Generators are each in a passive state with each diesel generator selected to run in the event of a power supply failure to the switchgear bus to which it is connected.

3.5.2.4.1.5 UPS Systems

Under normal circumstances the UPS units are in service supplying the UPS/no break loads and maintaining the UPS batteries in a fully charged state.

3.5.2.4.2 Non-Routine Operations

3.5.2.4.2.1 115 kV - 13 kV Utility Substation

Each 115 kV line is protected by sensitive high-speed fault detection equipment for both phase and ground faults. If a line fault occurs, the affected line is removed from service by opening the

associated circuit breakers. The un-affected line will supply the total power required until the faulted line is restored.

The main 115-13 kV transformers are also equipped with sensitive high speed fault detection equipment. If a fault occurs in a 115-13 kV main transformer, the protective relays isolate the transformer by tripping 115 kV and 13 kV circuit breakers. This results in the loss of the affected supply until the repair or replacement of the transformer is carried out. Complete site service is restored by switching the input of both sets of the facility 13 kV switchgear to the un affected transformer supply.

In the event of an electrical fault occurring in one of the 13 kV circuit breakers or the outgoing cables, the fault again is detected and isolated by the protective devices. As with the loss of a transformer, the affected supply is lost until repairs are made, but complete facility service is restored by switching to the un-affected supply.

The loss of one 115 kV line does not interrupt the facility power supply.

The loss of one main transformer, or one 13 kV breaker or one main outgoing cable would interrupt approximately one half of the site load until switching restores service.

3.5.2.4.2.2 13 kV Distribution System

Each of the main incoming cables from the 115-13 kV main transformers, each of the duplicate 13 kV switchgears, each of the 13 kV feeder cables and each of the step-down transformers are protected by sensitive high speed fault detection equipment.

In the event of an electrical fault occurring in either of the 13 kV switchgear lineups, the protective devices will automatically de-energize the affected portion of the equipment. This fault would result in loss of supply to equipment served from the faulted area until manual switching is done to serve these loads from their alternate source.

Each outgoing feeder circuit breaker is equipped with an overcurrent and ground fault protective scheme. In the event of an electrical fault occurring on the feeder, the circuit breaker will trip. This results in the loss of supplies to only the load center step-down transformer that is connected to this circuit.

In the event of a fault occurring in a 13 kV primary voltage load center step-down transformer, the fault is detected, and the transformer is removed from service by protective devices on the dedicated 13 kV feeder that supplies the transformer.

The design of the 13 kV plant distribution system is such that any loss of power due to individual faults can be restored by the manual switching to the alternate supply.

3.5.2.4.2.3 Plant 480/460 V Distribution System

In the event of an electrical fault occurring on a 13 kV-480/460 V step-down transformer, the fault is isolated by the feeder circuit protection systems. This results in the loss of supply until the necessary corrective action is taken.

In the particular case of the normal load switchgear, faults in this equipment are isolated by the automatic action of protective devices, and power is lost to the equipment served until repairs can be made or selectable loads are switched to their alternate supply.

In the particular case of the short break load, switchgear loss of the normal supply will cause the associated Standby Diesel Generator to automatically start and restore power. Faults in this equipment are isolated by the automatic action of protective devices, and power is lost to the equipment served until repairs can be made or selectable loads are switched to their alternate supply.

3.5.2.4.2.4 Standby Diesel Generators

In the event of a loss of power to the switchgear where a Standby Diesel Generator is connected, the Standby Diesel Generator will automatically start and supply power to the connected short break loads.

After restoring of the normal power supply, the system is manually switched back to the normal source and the Standby Diesel Generator is restored to standby service.

3.5.2.4.2.5 UPS Systems

In the event of a loss of input power to a UPS unit, the batteries will automatically supply power to maintain the UPS/no break loads without interruption.

When normal input power is restored, the batteries cease supplying output power and will automatically recharge. The UPS unit will continue to supply the UPS/no break loads without interruption.

The failure of a UPS unit will initiate automatic transfer of the unit's load to UPS input power supply without interruption. When the UPS unit is repaired and restored to service, the load is synchronized and manually switched back to the UPS without interruption.

3.5.2.5 Safety Considerations

Failure of the Electrical System will not endanger the health and safety of the public. Nevertheless, redundancy is provided in the system for reliability and to provide for investment protection.

The Electrical System is designed to minimize the combustible content of the equipment and the wiring. Transformers are dry type, and wiring is low flammability rated.

There are no IROFS associated with the Electrical System. For a complete listing of IROFS, see Section 3.8, Items Relied on for Safety (IROFS).

3.5.3 Compressed Air System

3.5.3.1 System Description

The Compressed Air System provides "instrument air quality" compressed air at 7 barg (102 psig) for use in instruments, controls, and equipment in the Separations Building, CUB, CAB, CRDB, and TSB. The system is located in the CUB. Compressed air is used to actuate

pneumatic instruments and control valves, to operate pneumatic tools and for maintenance activities.

The system consists of two, packaged, water-cooled compressed air units; two air filter/dryer units; two instrument air receivers; and associated instrumentation and distribution piping. The system is illustrated in Figure 3.5-20, Process Flow Diagram, Compressed Air System, Sheet 1 and Process Flow Diagram, Compressed Air Distribution, Sheet 2. The functional requirements of the Compressed Air System are provided in Table 3.5-2, Compressed Air System Design Parameters. The major components of the Compressed Air System are located in the Air Compressor Room of the Central Utilities Building (See Figure 3.3-18).

Outside air is filtered, precooled, compressed, and cooled prior to drying. A filter/dryer unit removes moisture and particulates to meet instrument air specifications. Two instrument air receivers act as surge vessels and provide a reserve supply of air in the event of an upset condition.

The instrument air operating pressure is established to meet the air supply pressure required to operate UF_6 valves. System surge capacity is based on supplying instrument air to all valves in UF_6 service for six operational cycles within a period of one minute at a supply pressure of 7 barg (102 psig). Service to plant air users and HVAC instruments is discontinued during operational upsets.

3.5.3.2 Major Components

The major components and design parameters are listed below.

A. Air compressor packaged units

There are two air compressor packaged units each sized to provide the total amount of plant and instrument air required in the Separations Building, Central Utilities Building, and other buildings. Each packaged unit consists of an air compressor, inlet air filter/silencer, precooler, aftercooler, intercooler, moisture separators (after each cooler), and an oil separator.

The design parameters of air compressor packages are as follows:

Quantity	2 active
Compressor type	Oil injected rotary screw
Capacity	323 m^3/hr (190 scfm) each
Pressure	13 barg (188.5 psig)
Materials of construction	Carbon steel

B. Air filter/dryer units

There are two air filter/dryer units each sized to dry and filter the design quantity of compressed air to -40°C (-40°F) dewpoint. The duplex dryer is designed to provide continuous service and automatic regeneration. Each unit consists of an air prefilter, desiccant dryer, and an air afterfilter.

The design parameters of the air filter/dryer units are as follows:

Quantity	2 active
Dryer media	Desiccant
Capacity	323 m^3/hr (190 scfm) each

Air dew point	-40°C (-40°F)
Materials of construction	Carbon steel

C. Instrument air receivers

There are two instrument air receivers each sized to provide the design quantity of instrument air to process valve operators at the required supply pressure for six operational cycles within a period of one minute after failure of both air compressors.

Quantity	2
Type	Vertical, 15 m^3 (530 ft^3)
Pressure relief	Yes
Materials of construction	Carbon steel

3.5.3.3 System Interfaces

The compressed air system interfaces with the following facility systems.

A. The Centrifuge Cooling Water System supplies cooling water to the air compressor packaged units.

B. The Process Water System water is used as backup cooling water during a power failure.

C. The Electrical System supplies power to operate the compressor motors, dryer, heater, lighting, and instrumentation.

D. The Standby Diesel Generator System supplies power to the compressor package units in case of primary power interruption.

3.5.3.4 Operational Characteristics

The Compressed Air System is normally operating and is designed to provide uninterrupted operation.

3.5.3.4.1 Routine Operation

The Compressed Air System is designed to provide a reliable and continuous supply of compressed air for plant and instrument use. During normal operation, both compressors operate at partial load. The system is designed to respond to changes in instrument air demand by adjustment of compressor operating capacity.

At design conditions, outside air is drawn through the compressor inlet air filter/silencer. Actual rate of air intake depends on system air demand and is adjusted by the packaged unit capacity controller. The inlet air is precooled, compressed with a positive displacement compressor, and cooled prior to drying in the system filter/dryer unit. Condensed water vapor is collected in moisture separators associated with the precooler, intercooler, and compressed air aftercooler. The compressor package unit will contain an oil separator to assure oil-free instrument air.

The compressed air is prefiltered and dried in a duplex self-regenerating desiccant dryer to a dew point of –40°C (-40°F) and is again filtered to prevent desiccant carryover. The flow of dried instrument air is split between two instrument air receivers. Instrument air is distributed

through ring headers in each Separations Building Module at 13 barg (188.5 psig) pressure. Pressure regulating valves in each Separations Building Module reduce the operating pressure to 7 barg (102 psig) for distribution to users.

3.5.3.4.2 Non-Routine Operation

The Compressed Air System is designed with equipment redundancy to ensure continuous operation. If mechanical repairs are required on an air compressor packaged unit, the unit is isolated and the other unit continues to operate. The drying unit also has a spare, and one unit may be isolated to perform maintenance, repairs, or desiccant replacement during normal operation.

The consequences of potential failure modes are discussed below:

A. Failure of the system pressure controller may result in both compressors operating at full capacity. Safety relief valves will vent the excess air to the atmosphere. Alternatively, the failure may result in insufficient air supply. In either case, high pressure alarms or low pressure alarms alert the operators to the upset condition.

B. Failure of the moisture analyzer on the air dryers may delay switchover of operation to a regenerated dryer and allow air to enter the system above the –40°C (-40°F) dew point. A redundant moisture analyzer will actuate alarms to alert the operators of the upset condition.

C. System surge capacity is based on supplying instrument air to all valves in UF_6 service for six operational cycles within a period of one minute at a supply pressure of 7 barg (102 psig). This capacity is estimated to be 100 $m^{3.}$

D. The Compressed Air System is supplied by backup power from the Standby Diesel Generator System. It remains in operation during interruption of the primary power supply.

E. Operation of a compressor in a blocked-in state results in excessive pressure. Pressure safety valves and alarms protect the system piping and equipment in the event that this occurs.

F. Failure of the cooling tower waterflow will result in air compressor shutdown. In this case process cooling water is used as a backup.

3.5.3.5 Safety Considerations

Failures in this system cannot endanger the health and safety of the plant personnel or the public. Nevertheless, special design and operating features enhance public safety and worker safety. The system has been designed with component redundancy and backup power supply as described above. These provisions contribute to public and worker safety by increasing the reliability of instrument air supply and thereby decreasing the probability of UF_6 process system upset.

There are no IROFS associated with the Compressed Air System. For a complete listing of IROFS, see Section 3.8, IROFS.

3.5.4 Water Supply

3.5.4.1 Process Water System

3.5.4.1.1 System Description

The Process Water System provides water to users throughout the facility. Process water refers to potable water that has passed through a backflow preventer upon entrance to the facility. Potable water is water that comes from a city water system. Water from the city water system is provided at a reliable pressure adequate to serve facility requirements. The system flow diagram is shown in Figure 3.5-21, Process Flow Diagram, Process Water Distribution System. The average daily water consumption of the NEF is provided in Table 3.5-3, Average Water Consumption.

3.5.4.1.2 Major Components

The Process Water System consists of two backflow preventers, one electric water heater, associated piping, valves, and instrumentation. Water is heated to 82.2°C (180°F) for use in the Laundry System.

The system also includes two storage tanks. Each tank has a 946,350 L (250,000 gal) capacity. Half of each tank is used for the storage of process water. The bottom half of each tank is used for fire water storage. The piping is connected so that it is impossible to use dedicated fire water for process water. Additional equipment includes one process water pump with a 100% spare and associated piping, valves, and instrumentation.

3.5.4.1.3 System Interfaces

The Process Water System interfaces with the following systems.

A. The Process Water System provides initial fill and makeup water to the HVAC Chilled Water System, the Centrifuge Cooling Water Systems, and the DI Water Supply and Distribution System and serves as backup cooling water for the compressed air system.

B. The Process Water System provides initial fill and makeup process feed water to the hot water expansion tanks and hot water boilers.

C. The Process Water System provides initial fill and makeup water to the standby diesel generator cooling systems.

D. The Process Water System supplies the Laundry System, the Decontamination System, the Liquid Effluent Collection and Treatment System (general washdown and tank flushing), various wash-down areas, and yard and construction services.

E. The Electrical System provides power for the electric water heater.

3.5.4.1.4 Operational Characteristics

A major piping failure in the Process Water System would not affect essential services. The Centrifuge Cooling Water System, HVAC Chilled Water System, and the Fire Water System have sufficient storage capacity to perform basic functions without receiving makeup water from the city water systems for up to 48 hours.

3.5.4.1.5 Safety Considerations

Failure of this system does not endanger the health and safety of the plant personnel or the public. A sufficient storage capacity is provided for all essential users such that failure of the Process Water System would not affect the performance of essential services over a reasonable period of time.

There are no IROFS associated with the Process Water System. For a complete listing of IROFS, see Section 3.8, IROFS.

3.5.4.2 Potable Water System

3.5.4.2.1 System Description

The Potable Water System provides potable quality water from a reliable water source to users throughout the facility.

3.5.4.2.2 Major Components

The system is a flow distribution network. It contains a backflow preventer to guard against contamination in the event that contaminated water is siphoned.

Local electric heaters provide heated potable water to various plant users such as restrooms, showers, and service sinks.

3.5.4.2.3 System Interfaces

The Potable Water System interfaces with the Septic System, the Process Water System, and the Fire Water System. The Septic System receives potable water that is not consumed. However, potable water that is potentially contaminated drains to the Liquid Effluent Collection and Treatment System.

The Potable Water System provides potable water to the following users.

A. Separations Building. Restrooms, service sinks, drinking fountains, emergency showers, and eyewash stations

B. CAB. Restrooms, service sinks, canteen, drinking fountains, eyewash stations, and emergency showers

C. CRDB. Restrooms, service sinks, and drinking fountains

D. TSB. Restrooms, break room, service sinks, drinking fountains, laboratory emergency showers, and eyewash stations

E. Administration Building and Visitor Center. Restrooms, service sinks, canteen, and drinking fountains

F. CUB. Restroom, service sink, drinking fountain, emergency shower, and eyewash stations.

3.5.4.2.4 Operational Characteristics

Potable water is available for use on demand. The use of potable water is intermittent, and there are no continuous users. The only control function performed by the system is thermostatic control of the electric water heaters.

3.5.4.2.5 Safety Considerations

Failure of this system does not endanger the health and safety of the plant personnel or the public.

There are no IROFS associated with the Potable Water System. For a complete listing of IROFS, see Section 3.8, IROFS.

3.5.4.3 Deionized Water Supply and Distribution System

Deionized (DI)water is produced on site. A single DI Water Supply and Distribution System provides DI water to the Centrifuge Cooling Water Distribution System of each Separation Building Module, to the laboratory users, to the Liquid Effluent Collection and Treatment System areas, and the Decontamination Workshop areas in the TSB.

3.5.4.3.1 System Description

A single DI Water Supply and Distribution System is located in the CUB. The system consists of a DI water storage tank, a supply pump, bag filter, ultraviolet sterilizers, heat exchanger, replaceable vessel style deionizers, and associated piping and instrumentation. This equipment serves each Separations Building Module, the DI water users in the TSB, and each HVAC unit humidifier. The DI Water Make-up System operates on an intermittent basis, while the DI Water Distribution System operates continuously. The system flow diagram is shown on Figure 3.5-22, Process Flow Diagram, DI Water Supply and Distribution System. The functional requirements of the DI Water Supply and Distribution System are provided in Table 3.5-4, Deionized Water Supply and Distribution System Design Parameters.

3.5.4.3.2 Major Components

The major components and design parameters are listed below.

A. DI water storage tank. The DI water storage tank has a capacity of approximately 1,893 L (500 gal). Fiberglass reinforced plastic (FRP) is used because of its compatibility with DI water and low cost. The tank is designed and equipped with a nitrogen blanket to deter biological growth.

Type	Dome roof
Quantity	1
Capacity	1893 L (500 gal)
Operating temperature	Ambient
Operating pressure	Approx. 76.2 mm (3 in) water column
Materials of construction	FRP

B. DI water loop supply pump. The DI water loop supply pump delivers DI water to the Centrifuge Cooling Water Distribution Systems and other users. A minimum flow bypass is provided to protect the pump from damage due to low flow operation.

Type	Centrifugal
Quantity	2 active
Design capacity	1.3 L/s (20 gpm)
Operating capacity	1.3 L/s (20 gpm)
Materials of construction	Stainless steel (no copper or pumps with copper bearings allowed)

C. Raw water bag filter. This filter is sized for approximately 2.6 L/s (40 gpm) and to remove suspended particulate material of 20 micron nominal.

D. Chlorine destruct ultraviolet sterilizer. The UV sterilizer is sized for approximately 2.6 L/s (40 gpm) and to remove free and total chlorine residual from the chlorinated water supply.

E. Deionizers. The replaceable ion exchange vessels are supplied with cation, anion, and mixed bed ion exchange resins, sized for 2.6 L/s (40 gpm) operation.

F. DI water cooling heat exchanger. This plate and frame stainless steel heat exchanger utilizes process chilled water supply to maintain the DI water loop temperature.

G. Biokill ultraviolet sterilizer. The UV sterilizer reduces the biological growth within the circulation loop with the chlorine residual removed.

3.5.4.3.3 System Interfaces

The DI Water Supply and Distribution System interfaces with the following plant systems.

A. The Process Water System supplies make up water for the DI Water Supply System.

B. The DI Water Supply and Distribution System provides fill and make up water to the Centrifuge Cooling Water Distribution Systems, laboratories, HVAC unit humidifiers, and the liquid effluent systems.

C. The Electrical System provides power to operate the pump, ultraviolet sterilizers, lighting, and instrumentation in the DI Water Supply and Distribution System.

D. The HVAC Chilled Water System supplies chilled water to cool the heat exchanger.

E. The Compressed Air System supplies instrument air to actuate instruments and control valves in the DI Water Supply and Distribution System.

F. The Nitrogen System provides nitrogen for tank blanketing.

An additional interface of this system is with the outside supplier of the replaceable deionizer vessels. The deionizers are delivered by truck as required.

3.5.4.3.4 Operational Characteristics

The DI Water Supply and Distribution System operates intermittently for the make up system, and the distribution system operates continuously to fill and make up DI water to the expansion vessels in the Centrifuge Cooling Water Distribution System, and to the other users of DI water.

3.5.4.3.4.1 Routine Operation

The make up system for the DI Water Supply and Distribution System normally operates intermittently, depending on the level of the DI water storage tank. The distribution loop system operates continuously, returning DI water to the DI water storage tank. The DI water supply pumps run continuously. When the DI water storage tank reaches a low water level, the inlet make up control valve opens, and the chlorine destruct ultraviolet sterilizer is turned on, allowing refill of the DI water storage tank. DI water is pumped at approximately 2.6 L/s (40 gpm) from the DI water storage tank to the loop serving the Centrifuge Cooling Water Distribution System expansion vessel in each of the three Separations Building Modules. The inlet control valve for the expansion tank is automatically opened and closed by a signal from a level control on the Centrifuge Cooling Water Distribution System expansion vessels. DI water is supplied at approximately 1.48 L/s (20 gpm) to the Centrifuge Cooling Water System expansion vessel in each of the three Separations Building Modules from the distribution loop. DI water is supplied at approximately 0.74 L/s (10 gpm) to the HVAC humidifiers.

The supply of DI water from the anion deionizer is monitored and alarmed for specific conductivity, alerting the plant staff of the need to replace the cation-anion vessels.

3.5.4.3.4.2 Non-routine Operation

The following non-routine operations are considered:

A. <u>Empty DI water storage tank</u>. A low level shutdown switch on the storage tank protects the DI water loop supply pump from this condition.

B. <u>DI water loop supply pump discharge line and minimum flow line isolated</u>. The pump could be operated in a blocked-in condition that could result in pump damage. An operator would be alerted to this condition when the loop supply flow rate fails to meet design flow conditions.

C. DI water storage tank level control signal failure. This could result in continued make up water flow to the DI water storage tank after the tank level is established. If the inlet control valve is not closed, make up water will spill out of the tank overflow.

D. Centrifuge Cooling Water Distribution System expansion tank level control signal failure. This could result in continued make up water flow to a Centrifuge Cooling Water Distribution System expansion vessel after the vessel level is established. If the inlet control valve is not closed, DI water will spill out of the vessel overflow.

The DI Water Supply and Distribution System does not have redundant components or a backup power supply because its function is non-essential.

3.5.4.3.5 Safety Considerations

Failure of the DI Water Supply and Distribution System does not endanger the health and safety of the plant personnel or the public.

There are no IROFS associated with the DI Water Supply and Distribution System. For a complete listing of IROFS, see Section 3.8, IROFS.

3.5.4.4 Hot Water System

The Hot Water System is located in the Central Utilities Building. The system provides hot water for building and area HVAC heating requirements.

3.5.4.4.1 System Description

The closed loop Hot Water System provides heating service for the HVAC systems in the CUB, UF_6 Handling Areas, Cascade Halls 1 through 6, TSB, Blending and Liquid Sampling Area, CRDB, and the CAB.

The Hot Water System provides hot water to the HVAC AHUs. It only services the HVAC requirements for building heat. The Hot Water System consists of two, 100% capacity systems, with one system serving as redundant back up for the primary system. Each system consists of a hot water expansion bladder type tank, a natural gas fired hot water boiler with boiler circulation pump, a chemical feeder unit, dual primary hot water loop supply pumps, and the associated distribution piping, instrumentation, and controls. The Hot Water System is shown on Figure 3.5-23, Process Flow Diagram, Boilers and Hot Water Distribution System. The functional requirements of the Hot Water System are provided in Table 3.5-5, Hot Water System Design Parameters.

3.5.4.4.2 Major Components

The major components and design parameters are listed below.

A. Hot water expansion tank. The hot water expansion tank is sized to accommodate the thermal expansion of water in the hot water distribution system.

Type	Horizontal type with internal expansion bladder
Quantity	2 (1 per hot water boiler)
Capacity	3785 L (1000 gal)
Operating temperature	5.6°C – 82.2°C (42°F – 180°F)
Operating pressure	2.1 bar (30 psi).
Materials of construction	Carbon steel

B. Boiler circulation pumps. These pumps circulate hot water through the boilers from the hot water loop return and from the hot water expansion tank.

Type	Centrifugal
Quantity	2; 1 per hot water boiler
Design capacity	9.46 L/s (150 gpm)
Operating capacity	8.52 L/s (135 gpm)
Materials of construction	Cast iron with bronze impeller

C. Chemical feeder unit. The chemical feeder operates on a manual basis to add oxygen scavenger and corrosion inhibitor to the closed loop hot water boiler system.

Quantity	1
Vessel capacity	7.6 L (2.0 gal)
Materials of construction	Carbon steel

D. Hot water boilers. These fire tube type boilers are designed to heat circulating hot water to 82.2°C (180°F).

Type	Natural gas fired
Quantity	2; 1 operating, 1 spare
Peak duty	2943.3 kW (10.045 Million BTUH), nominal capacity each
Materials of construction	Carbon steel

E. Hot water air separator. This unit is sized to remove entrained air from the hot water prior to the hot water supply pumps to eliminate cavitation.

Type	Tangential
Quantity	1
Operating temperature	15.6°C – 82.2°C (60°F – 180°F)
Operating pressure	6.89 bar (100 psi)

Materials of construction	Carbon steel

F. Primary hot water supply pumps. These pumps circulate hot water to the HVAC AHUs within the facility.

Type	Centrifugal
Quantity	2; 1 operating, 1 standby
Design capacity	69.4 L/s (1100 gpm)
Operating capacity	63.1 L/s (1000 gpm)
Discharge pressure	6.89 bar (100 psi)
Materials of construction	Cast iron with bronze impeller

The piping in the Hot Water System is fabricated from carbon steel.

3.5.4.4.3 System Interfaces

The Hot Water System interfaces with the following plant systems:

A. The Compressed Air System provides compressed air to actuate process equipment.

B. The HVAC systems use hot water to heat air in the HVAC AHUs.

C. The Process Water System provides make up process feed water to the hot water expansion tanks and hot water boilers.

D. The Electrical System supplies power to operate the pumps, hot water boiler system packages, and instrumentation.

3.5.4.4.4 Operational Characteristics

3.5.4.4.4.1 Routine Operations

The Hot Water System normally operates as a continuously circulating, temperature-controlled, closed loop hot water system. Heating loads vary depending on seasonal and daily variations in the HVAC System loads.

The hot water supply temperatures in the system are maintained with temperature controllers on the outlets of the two hot water boilers, which increase or decrease natural gas burning rates as required.

A constant hot water supply temperature of 82.2°C (180°F) to the HVAC air handler units is maintained. Hot water supply to the HVAC equipment has a high temperature alarm and a high-high temperature shutdown control to ensure that the supply hot water temperature does not exceed 82.2°C (180°F).

3.5.4.4.4.2 Non-routine Operations

A. Equipment Failure. The pumps, hot water boilers, and components in the Hot Water System are equipped with redundancy to provide maximum reliability. The hot water expansion tanks are included with the redundancy of the hot water boiler packaged equipment. The chemical bypass feeder systems are used daily to ensure oxygen scavenger residuals. They are redundant with the hot water boilers.

B. Instrument Failure. Failure of instrumentation may lead to incorrect temperature control of the hot water. Overheating of supply hot water to the HVAC units results in high temperature alarms, and equipment isolation and shut down.

C. Instrument Air Failure. Failure of instrument air results in the instruments failing to a safe position.

D. Power Failure. A power failure to the Hot Water System results in shutdown of the system. Supply of hot water to the HVAC AHUs is interrupted until power is restored. This system is not supplied with standby power.

E. Operator Error. The Hot Water System is an automated packaged system and there is little or no routine operator intervention required. The operator could incorrectly adjust the set points on the temperature controllers, but alarms would alert personnel of incorrect water temperatures.

3.5.4.4.5 Safety Considerations

Failure of this system will not endanger the health and safety of the plant personnel or the public. Active components are redundant throughout the system for maximum reliability.

There are no IROFS associated with the Hot Water System. For a complete listing of IROFS, see Section 3.8, IROFS.

3.5.5 Cooling Water Systems

3.5.5.1 HVAC Cooling Water System

The HVAC Cooling Water System consists of multiple chillers and cooling towers. A chilled water loop discharges excess facility heat to the atmosphere through a cooling tower loop.

3.5.5.1.1 System Description

The HVAC Cooling Water System and equipment design bases are shown on Figure 3.5-24, Process Flow Diagram, HVAC Cooling Water System, Chillers/Pumps. The system consists of the HVAC Chilled Water System and the HVAC Cooling Tower Water System. Each chiller of the HVAC Chilled Water System has dedicated and spare primary chilled water pumps. This primary loop also includes an expansion tank. The secondary chilled water loop of the HVAC Chilled Water System delivers chilled water from the CUB to other areas of the facility. The

functional requirements of the HVAC Cooling Water System are provided in Table 3.5-6, HVAC Cooling Water System Design Parameters.

The HVAC Chilled Water System provides 5.6°C (42°F) chilled water to the following systems:

A. Various HVAC Systems

B. Product Liquid Sampling System

C. DI Water Supply and Distribution System

D. Evaporator/Dryer Condenser (Liquid Effluent Collection and Treatment System)

The centrifugal chillers of the HVAC Chilled Water System cool the chilled water using R-134a refrigerant. An expansion tank in the chilled water return line is provided to accommodate liquid expansion in the system. System equipment and distribution piping are insulated to limit heat gains and prevent condensation on the piping surface.

The HVAC Cooling Tower Water System circulates water from the cooling towers through the condenser side of the chillers and back to the cooling towers. This loop includes multiple cooling towers, multiple cooling tower water pumps, and chemical treatment. The HVAC Cooling Tower Water System and component design basis are shown on Figure 3.5-25, Process Flow Diagram, HVAC Cooling Tower Water System, Cooling Towers and Pumps, Sheet 1.

3.5.5.1.2 Major Components

The major components and design parameters of the HVAC Chilled Water System are listed below.

A. Chillers. Each chiller is sized to meet 50% of the total system duty.

Type	Centrifugal
Quantity	2 operating, 1 spare
Refrigerant	R-134a
Chilled water supply temperature	5.6°C (42°F)

B. Primary chilled water pumps. The primary chilled water pumps are sized to provide 100% flow through each of the chillers.

Type	Centrifugal
Quantity	1 operating and 1 spare per chiller (6 total)
Material of construction	Cast iron with bronze impeller

C. Secondary chilled water pumps. The number and size of the secondary chilled water pumps are sufficient to meet flow requirements for user loads with an 5.6°C (42°F) temperature rise.

Type	Centrifugal
Quantity	To be determined during the design phase
Material of construction	Cast iron with bronze impeller

D. Chilled water expansion tank. The expansion tank is sized to accommodate the expansion of water in the system over the temperature range of 5.6°C to 26.7°C (42°F to 80°F) and to accommodate leakage from the system.

Type	Horizontal
Quantity	1
Operating temperature	Ambient
Operating pressure	Atmospheric or pressurized
Materials of construction	Epoxy coated carbon steel

The major components and design parameters of the HVAC Cooling Tower Water System are listed below.

A. Cooling tower. The cooling towers are sized to meet 100% of the total system duty.

Type	Closed Circuit Evaporative Coolers
Quantity	8 operating, 2 spare (10 total)
Material of construction	Galvanized carbon steel with stainless steel wetted parts

B. Cooling tower water pumps. The number and size of the cooling tower water pumps are sufficient to meet flow requirements for user loads of the chillers.

Type	Centrifugal
Material of construction	Cast iron with bronze impeller

C. Cooling tower water expansion tank. The expansion tank is sized to accommodate the expansion of water in the system over the temperature range of 5.6°C to 32.2°C (42°F to 90.1°F) and to accommodate leakage from the system.

Type	Horizontal
Quantity	1
Operating temperature	Ambient
Operating pressure	Atmospheric or pressurized
Materials of construction	Epoxy coated carbon steel or fiberglass reinforced polyester (FRP)

All components of the HVAC Cooling Water System, except the cooling towers are located in the Chiller Room of the CUB. The cooling towers are located outside the CUB.

3.5.5.1.3 System Interfaces

The HVAC Cooling Water System interacts with the following plant systems.

A. The Blending and Liquid Sampling Systems are supplied with 5.6°C (42°F) chilled water to cool the autoclaves.

B. The various HVAC systems are supplied with 5.6°C (42°F) chilled water to cool the ventilation air.

C. The Compressed Air System supplies instrument air to actuate the chilled water system control valves and instruments.

D. The Process Water System supplies makeup water.

E. The Electrical System supplies power to operate the primary and secondary chilled water pumps, condenser water pumps, lighting, and instrumentation. The Electrical System supplies power to the chillers and cooling towers.

F. Provide 5.6°C (42°F) cooling water to the DI Water System.

G. Provide 5.6°C (42°F) water to cool the Evaporator/Dryer in the Liquid Effluent Collection and Treatment System.

3.5.5.1.4 Operational Characteristics

During normal operation, the HVAC Chilled Water System, supported by the HVAC Cooling Tower Water System, provides a continuous supply of chilled water to plant users. Chilled water is pumped to the various users by the secondary distribution loop. The temperature of the chilled water is maintained at 5.6°C (42°F).

3.5.5.1.4.1 Routine Operation

The chilled water supply temperature is maintained at 5.6°C (42°F) with centrifugal chillers. Multiple 50% capacity chillers are provided to accommodate fluctuating HVAC cooling loads and all plant loads.

3.5.5.1.4.2 Non-routine Operation

The HVAC Cooling Water System is designed with redundancy to provide maximum reliability. The consequences of potential failure modes are discussed below.

A. Equipment Failure. All equipment in this system, except the chilled water expansion tank, is provided with redundancy. In the event of equipment failure, spare equipment is placed into service. If the expansion tank develops a leak, the vessel is bypassed while the leak is repaired. The multiple, 50% capacity chillers permit maintenance on one chiller at a time. The others remain in service, providing 100% of the plant cooling needs.

B. Instrumentation Failure. All instruments and control valves are designed to fail in a safe position. Control valves may be isolated and bypassed for maintenance.

C. Instrument Air Failure. All control valves and instruments that operate on instrument air will fail to a safe position in the event of instrument air failure.

D. Power Failure. All equipment in this system will shutdown in the event of power failure.

E. Operator Error. If a chilled water pump is operated with a closed discharge valve, a low flow switch is provided in the pump discharge line to trip the pump. If an operator erroneously shuts down a cooling water chiller, a high chilled water temperature alarm is initiated.

3.5.5.1.5 Safety Considerations

Failure of this system does not endanger the health and safety of the plant personnel or the public. Redundancy is provided for all major components to enhance the reliability of the system.

There are no IROFS associated with the HVAC Cooling Water System. For a complete listing of IROFS, see Section 3.8, IROFS.

3.5.5.2 Centrifuge Cooling Water System

The Centrifuge Cooling Water System provides cooling water to the centrifuge cooling jacket coils, thus maintaining the required centrifuge operating temperatures necessary for efficient isotope separation.

3.5.5.2.1 System Description

The Centrifuge Cooling Water System consists of multiple closed cell cooling towers that discharge excess process heat to the atmosphere through a combination of multiple cooling towers. Other components of the loop include tower water pumps and an expansion tank. The cooling tower water loop delivers cooling water to the air compressors and to the Centrifuge Cooling Water Distribution System.

The Centrifuge Cooling Water System is illustrated on Figure 3.5-25, Process Flow Diagram, Centrifuge Cooling Water System, Cooling Towers and Pumps, Sheet 2.

The Centrifuge Cooling Water System provides 28.0°C (82.5°F) cooling tower water to the Centrifuge Cooling Water Distribution System.

Expansion tanks in the cooling tower water return line are provided to accommodate liquid expansion in the system. System equipment and distribution piping are insulated to limit heat gains.

3.5.5.2.2 Major Components

The equipment design parameters are listed below.

A. Centrifuge cooling water pumps. The number and size of centrifuge cooling water pumps are sufficient to provide 100% flow through each of the towers.

Type	Centrifugal
Quantity	To be determined during the design phase
Material of construction	Stainless steel

B. Cooling tower. The cooling towers are sized to meet 100% of the total system duty with 43% spare capacity.

Type	Closed cell cooling tower
Quantity	7 operating, 3 spare (10 total)
Material of construction	Stainless steel

C. Cooling tower water expansion tanks. The expansion tanks are sized to accommodate the expansion of water in the system over the temperature range of 4.4°C to 37.8°C (40°F to 100°F) and to accommodate leakage from the system.

Type	Horizontal
Quantity	2

Operating temperature	Ambient
Operating pressure	Atmospheric or pressurized
Materials of construction	Epoxy coated carbon steel or fiberglass reinforced polyester (FRP)

All components of the Centrifuge Cooling Water System, except the cooling towers are located in the CUB. The cooling towers are located outside the CUB.

3.5.5.2.3 System Interfaces

The Centrifuge Cooling Water System interacts with the following plant systems.

A. The Centrifuge Cooling Water Distribution System is supplied with 28.0°C (82.5°F) cooling tower water.

B. The Compressed Air System supplies instrument air to actuate the cooling tower water system control valves and instruments.

C. The Process Water System supplies makeup water to the centrifuge cooling tower water basins.

D. The DI Water System supplies makeup water to the Centrifuge Cooling Water System.

E. The Electrical System supplies power to operate the chillers, cooling towers, primary and secondary chilled water pumps, condenser water pumps, lighting, and instrumentation.

F. The air compressors will be supplied with 28.0°C (82.5°F) cooling tower water.

3.5.5.2.4 Operational Characteristics

During normal operation, the Centrifuge Cooling Water System provides a continuous supply of cooling tower water to process centrifuge users and air compressors. The temperature of the cooling tower water is maintained at 28.0°C (82.5°F).

3.5.5.2.4.1 Routine Operation

The cooling tower water supply temperature is maintained at 28.0°C (82.5°F). Multiple towers are provided to accommodate fluctuating process cooling loads.

3.5.5.2.4.2 Non-routine Operation

The Centrifuge Cooling Water System is designed with redundancy to provide maximum reliability. The consequences of potential failure modes are discussed below.

A. Equipment Failure. All equipment in this system, except the cooling tower water expansion tank, is provided with redundancy. In the event of equipment failure, spare equipment is placed into service. If the expansion tank develops a leak, the vessel is bypassed while the leak is repaired. The multiple towers permit maintenance on up to 3 towers at a time. The others remain in service, providing 100% of the process centrifuge cooling needs.

B. Instrumentation Failure. All instruments and control valves are designed to fail in a safe position. Control valves may be isolated and bypassed for maintenance.

C. Instrument Air Failure. All control valves and instruments that operate on instrument air will fail to a safe position in the event of instrument air failure.

D. Power Failure. All equipment in this system will shutdown in the event of power failure.

E. Operator Error. If a cooling tower water pump is operated with a closed discharge valve, a low flow switch is provided in the pump discharge line to trip the pump. If an operator erroneously shuts down a cooling tower, a high cooling tower water temperature alarm is initiated.

3.5.5.2.5 Safety Considerations

Failure of this system does not endanger the health and safety of the plant personnel or the public. Redundancy is provided for all major components to enhance the reliability of the system.

There are no IROFS associated with the Centrifuge Cooling Water System. For a complete listing of IROFS, see Section 3.8, IROFS.

3.5.5.3 Centrifuge Cooling Water Distribution System

3.5.5.3.1 System Description

The Centrifuge Cooling Water Distribution System is located in the Process Services Area in each Separations Building Module. The Centrifuge Cooling Water Distribution System supplies DI cooling water to the centrifuge cooling jackets in each cascade, maintaining the required operating temperature and ensuring efficient isotope separation during uranium enrichment. The system is shown on Figure 3.5-26, Process Flow Diagram, Centrifuge Cooling Water Distribution System. The functional requirements of the Centrifuge Cooling Water Distribution System are provided in Table 3.5-7, Centrifuge Cooling Water Distribution System Design Parameters.

The Centrifuge Cooling Water Distribution System consists of identical equipment in each Separations Building Module and includes piping, instrumentation, and controls. The cascade circulation pumps are located in the Process Services Area adjacent to the respective cascade that they service. During normal operation, centrifuge cooling water is cooled by the Centrifuge Cooling Water Distribution System and is circulated through the centrifuge cooling jackets in each cascade.

The primary functional requirement of the Centrifuge Cooling Water Distribution System is to provide a heat sink for the heat load produced by centrifuges in each Separations Building Module. The system is initially filled with DI water from the DI Water Distribution System.

3.5.5.3.2 Major Components

The major components and design parameters are listed below.

A. Cascade circulation pumps. The cascade circulation pumps are sized to provide sufficient flow to each cascade to meet heat removal requirements.

Type	Centrifugal
Quantity	32 per Separations Building Module; 1 operating, 1 spare for each cascade
Operating capacity	27.2 L/s (431.5 gpm)
Materials of construction	Stainless steel

Materials of construction are selected to be compatible with the highly corrosive DI water and with the aluminum cascade cooling coils.

3.5.5.3.3 System Interfaces

The Centrifuge Cooling Water Distribution System interfaces with the following plant systems:

A. Centrifuge cooling water is supplied to the Cascades.

B. The Centrifuge Cooling Water System supplies process cooling water used to cool the Centrifuge Cooling Water Distribution System.

C. The DI Water Supply and Distribution System supplies make up DI water to the Centrifuge Cooling Water Distribution System.

D. The Compressed Air System supplies instrument air to actuate instruments and control valves in the Centrifuge Cooling Water Distribution System.

E. The Electrical System provides power to operate cascade circulation pumps and instrumentation.

3.5.5.3.4 Operating Characteristics

This system operates continuously and is designed to provide highly reliable operation. In the event the UF_6 flow through a centrifuge or cascade is interrupted, the Centrifuge Cooling Water Distribution System continues operating without need for shutdown.

3.5.5.3.4.1 Routine Operation

This system is designed to provide high reliability and operate continuously to remove heat from the centrifuges. The system operates within a tightly controlled temperature range. Temperatures are closely regulated to ensure the efficiency of isotope separation.

The flow is split evenly between the two cascade halls in each Separations Building Module, and then again among the eight centrifuge cascades in each cascade hall.

3.5.5.3.4.2 Non-routine Operation

The Centrifuge Cooling Water Distribution System is designed with redundancy of components to provide maximum reliability. The consequences of projected potential failure modes are discussed below.

A. Equipment Failure. This system is designed with a high degree of equipment redundancy to ensure continuous operation.

B. Instrumentation Failure. Failure of the temperature control instrumentation in the cascade area could result in under or over-cooling of the centrifuges, which has no safety impact.

C. Instrument Air Failure. All control valves and instruments that operate on instrument air will fail in a safe position in the event of instrument air failure.

D. Cooling Water Failure. Failure of the cooling water supply to the centrifuges would cause the cooling water temperature to rise.

E. Power Failure. All equipment in this system will shutdown in the event of power failure.

F. Operator Error. Extended operation of any pump in a blocked-in or dry condition could result in damage and potential failure of the pump. The resultant pump failure could result in under-cooling of the centrifuges.

3.5.5.3.5 Safety Considerations

Failure of this system will not endanger the health and safety of the facility personnel or the public. Active components are redundant throughout the system for maximum reliability.

There are no IROFS associated with the Centrifuge Cooling Water Distribution System. For a complete listing of IROFS, see Section 3.8, IROFS.

3.5.6 Septic System

3.5.6.1 System Description

The Septic System is designed to treat, collect, and transport all domestic sewage generated at the NEF. The system is capable of handling approximately 17,280 L (5,250 gal) per day.

The system includes multiple septic tanks and drain fields. Septic tanks are located at each Security Building, at the Administration Building, and at other places in the facility where a concentration of toilets exist.

3.5.6.2 Safety Considerations

There are no IROFS associated with the Septic System. For a complete listing of IROFS, see Section 3.8, IROFS.

3.5.7 Communication and Alarm Annunciation Systems

The Communication and Alarm Annunciation System is designed to provide reliable intra-facility and facility-to-offsite communications, as well as offsite emergency communications with public emergency response agencies.

3.5.7.1 Communication Systems Description

The primary communication systems at the facility are the facility telephone system and the two-way radio system.

3.5.7.1.1 Facility Telephone System

This system, which is permanently connected to the commercial telephone system, is the normal means of communications between local law enforcement authorities, public emergency response agencies and the facility.

The system is a conventional landline based private business exchange (PBX) telephone system that has a central switchboard. The system is a state of the art digital facility with the capabilities to offer special features in addition to basic telephone service such as; call tracing or call recording.

A sufficient quantity of telephones will be located strategically to allow facility personnel easy access to telephones from all facility locations.

The telephone lines enter the facility and interface with the site network in the main communications room located on the first floor of the Administration Building. The commercial telephone lines are terminated on protectors located in the communications room and extended to telephones located throughout the facility. The site lines leave the room through underground conduit to communication rooms located throughout the facility.

3.5.7.1.2 Two-way Radio System

This system, which can be connected with local law enforcement or other agencies during emergencies, is the primary communications system for the site security services.

This form of communication consists of radio base stations, mobile radios and handheld radios. Radio base stations are placed in the Security's Central Alarm Station (CAS) and Security Building. The radios have multiple channels, one of which is dedicated entirely to security.

Two-way radio communication is used by site security or by other personnel when the facility telephones are not accessible.

Two-way radios will not normally be used within the Separations Building due to the fact that radio interference from these systems can adversely affect the operation of plant control systems. During emergencies, however, their use will be unrestricted.

Radio signals may be sent via a centrally located radio tower or radio towers distributed throughout the facility.

The radio base stations are in separate locations so that it is unlikely that a fault would take the system out of service. Therefore, a reliable communication both on and off site is present at all times whether the plant is experiencing a normal or abnormal situation.

The radio base stations are powered by diesel-backed AC sources and remain operative following loss of offsite power.

Radio communications use the appropriate FCC licensed radio frequencies for the plant.

The communication systems are designed to provide appropriate redundancy so that a single failure in one system will not leave the facility without communication capability.

The design also permits continuous communications between the Control Room, the CAS, and security personnel on duty at the facility.

In the event of a failure of the facility telephone system, voice paging and direct conversation can be accomplished by the use of two-way radio.

Direct voice communication within the facility is handled by the facility telephone system using extension telephones with direct dialing between extensions.

Facility personnel may be paged through the public address (PA) system from a base station located in the Administration Building or the CAS. The control room operator also has direct access to the system from a third PA system base station in the control room. During emergencies the use of the CAS base station overrides the normal Administration Building paging operation.

3.5.7.1.3 Alarm Annunciation System

Facility alarm systems which provide security, safety and environmental protection such as fire alarm, radiation monitoring, gas release, equipment failure, etc. all provide audio and visual annunciation in either the Control Room or CAS. Control Room and/or security personnel will respond to the alarm condition directly and if applicable annunciate the condition over the PA system.

The PA system is tied into the phone system through a designated access number. The PBX has an override function that when the PA system is being accessed through the designated access number, voice communication will stop and a prerecorded alarm will sound. The prerecorded alarm is used to indicate an emergency situation such as a fire, an injury, or site evacuation. An alarm will sound and be followed immediately with a message giving directions over the PA system. The Control Room base station has complete control of the system and is able to switch the alarm off and give a voice message or initiate a prerecorded message. If the PA system is inoperable, two-way radios or telephones can be used.

Speakers are strategically located around the site both inside and outside so that personnel at any location on the site can be clearly notified of an event. The PA system will have a dual architecture such that during a single failure the system will still allow alarms to be annunciated. The PA system allows communication to people in remote areas of the facility where telephones are not accessible.

3.5.7.2 System Interfaces

The facility telephone system ties in with the local telephone company. The Communication and Alarm Annunciation Systems are powered by the Electrical System.

3.5.7.3 Major Components

The following items are provided as part of the Communication and Alarms System:

A. Facility Telephones. Telephones are fixed wall mounted or desktop style.

B. Two-way Radio (Portable). The portable two-way radio is hand held and has multi-channel capability. The radio signal is strong enough such that anyone can be contacted on site.

C. Two-way Radio (Mobile). The mobile two-way radio is mounted in vehicles on an extra stable mount. It is capable of multi-channel communication. The radio signal is strong enough to reach all areas of the facility from any point within the facility and communicate with offsite emergency agencies.

D. Radio Base Station. The radio base station is a desktop model with multi-channel capability. The range extends to the hospital, fire department, and law enforcement even under the worst possible environmental conditions.

3.5.7.4 Operational Characteristics

3.5.7.4.1 Routine Operation

During normal operation, the site communication system provides facility telephone, radio, PA, and alarms for operation, security and administration communication.

3.5.7.4.2 Non-routine Operation

During off-normal operation, the site communication system provides telephone, PA, radio, and alarms for response to abnormal process operation, hazards (fire, chemical and radiological) and security events. The communication system aids in the following:

A. The evacuation of personnel from the site or buildings

B. The actuation of appropriate systems and components

C. The identification of a need for containment of a hazard and appropriate measures to be taken

D. Notification of local law enforcement of an event

E. Communicating the need for fire fighting, medical, or security assistance.

3.5.7.5 Safety Considerations

Failure of the Communication and Alarm Annunciation Systems would not endanger public health and safety. Nevertheless, the Communication and Alarm Annunciation Systems are designed with redundant devices for emergency communications, as described above. Backup power is supplied to essential devices to assure communications during abnormal conditions.

There are no IROFS associated with the Communication and Alarm Annunciation Systems.

3.5.8 Fire Protection

The Fire Protection System is described in Chapter 7, Fire Safety. For a complete listing of IROFS, see Section 3.8, IROFS.

3.5.9 Control Systems

3.5.9.1 Functional Requirements

The Plant Control System (PCS) performs the following functions:

- Provide asset protection
- Enable operators to supervise and control all enrichment plant operations
- Control and protect the enrichment process
- Provide local operators with facilities to enable preparation of the enrichment process
- Provide a supervisory interface for auxiliary systems
- Provide historical data for analysis.

The detailed instrumentation needed to achieve the functionality identified above is included in the process system descriptions (Section 3.4 Enrichment and other Process Descriptions).

Facility control and monitoring systems are designed to handle abnormal levels of data and alarms that may occur during upset and emergency conditions. The Control Room is designed to accommodate equipment to monitor, alarm, and record environmental, effluent, and fire protection data.

Field-proven designs fabricated from proven materials for intended services and operating conditions are specified. In all cases the system utilizes standard, current technology instrumentation as well as hardware and software purchased from proven manufacturers and vendors with many years experience in the industry.

All process instrumentation specified has been qualified for use in uranium enrichment plants.

3.5.9.2 System Description

The PCS is designed to accommodate the full separation plant operation. The system is configured to enable integration using standard control technology together with connected, but separate, protection systems that provide the required level of protection.

The PCS includes the following:

- Central Control System (CCS), including SCADA, Servers, Operator Stations, Overview Screens and Communications Networks
- Local Control Systems (LCS), including Programmable Logic Controllers (PLC) and Local Operator Interface
- Interfaces to process equipment and Auxiliary Systems
- Training System
- Process Instrumentation and Wiring.

3.5.9.2.1 Central Control System

The Central Control System (CCS) is the top-level supervisory system. It is computer-based and consists of the Supervisory Control and Data Acquisition (SCADA) System, redundant server system, fiber and copper networks, operator workstations and overview screens. The core of the CCS is located in the Control Room with network expansion throughout the facility connecting each LCS. A pictorial representation of the CCS is shown in Figure 3.5-27, Plant Control System, Central Control System, Sheet 1.

The purpose of the CCS is to:

A. Enable the minimum number of operators to carry out remote operation of the process.

B. Provide operators and maintenance personnel with information about the status of the equipment in the facility.

C. To allow remote control room operation of some frequently required operations, e.g., changing the state of a feed station.

D. Provide alarms for the operators in case of abnormal events so that action can be taken to prevent an interruption of the process.

E. Provide real-time and historical data storage to allow analysis of:

- Facility performance
- Post event protection actions
- Comparison between historical and real-time events.

The CCS architecture is configured such that no single failure will prevent the operators from controlling and monitoring the process. The level of CCS redundancy in terms of operator

stations, servers, communication modules and networks provides a high availability of the system for monitoring and supervisory control.

The CCS provides supervisory monitoring and control as its primary function. Process protection, and protection of workers, the environment, and the public is implemented locally by facility equipment.

The SCADA system, which is implemented as part of the CCS, provides the operator with a complete visual interface to the plant. Facility mimics, overviews, trends, alarms, events, and control functionality is provided for the operator.

Facility visualization is provided through the facility overview screen or the operator workstations. The operator interface is organized in hierarchical levels to reduce duplication and complexity and minimize operator response time. The organizational levels of the interface has a maximum of four display levels:

A. Object Level. Objects are pumps, valves, blowers, and other assorted individual pieces of equipment.

B. Process Level. A process is a combination of individual objects grouped together by the overall process they control.

C. System Level. A system is a combination of specific processes that are grouped together to control a specific system, for example feed stations or assay pump trains.

D. Overview. The overview is a strategic view of the entire process, shown in clear and concise format to provide the operator with a constant and immediate understanding of the plant processes.

As a minimum a four level password security system is provided to manage access to the SCADA, providing a range of access from view-only to engineering access for changes to operating parameters.

All facility alarms are shown on the SCADA systems. The principle for alarms and alarm handling is such that alarms do not occur, and the alarm list is empty during normal operations, with alarms provided for abnormal operation only. When alarms do occur, they are listed in chronological order, displayed in defined colors and are brought to the operator's attention both audibly and visually. Alarm classes and filtering are provided to increase alarm recognition and improve operator response to alarm conditions.

3.5.9.2.2 Local Control Systems

The Local Control System (LCS) is the process-level control and protection system that includes process instrumentation and Local Control Centers (LCC) installed locally in the process area. Local Operator Interfaces (LOI) are provided for local operator control and monitoring. Each LCC has sufficient functionality to completely operate and protect its associated process system without any CCS intervention. A pictorial representation of the LCS is shown in Figure 3.5-27, Plant Control System, Local Control System, Sheets 2 and 3.

The architecture of the LCS follows the unit-architecture of the process facility. Specifically, where operational redundancy of the process system is provided (for example multiple Tails Stations), a dedicated control and protection system is provided (1 LCC per Tails Station).

Remote I/O and Local Area Networks (LANs) are used to communicate the status of process equipment and auxiliary systems with the LCC-mounted PLC systems. The LCS control equipment, software and hardware are designed to maintain the process parameters within the required process control limits during all normal and abnormal operations.

The Local Control Cabinet provides the physical housing accommodating all the necessary equipment for local operator control, automatic control and protection as well as remote monitoring interfaces for a designated process control system. Each Local Control Cabinet provides all the terminations, signal conditioning, power supplies, etc. that are required to interface with the field instrumentation. Field wiring and related installation equipment as well as signal conditioning equipment are reduced to a minimum to ensure the integrity, accuracy and long-term reliability of the system. The positioning of the LCCs provides for monitoring, control, and protection of all plant processes as close to the system as possible.

LCCs consist of the following major components:

A. PLC and hardwired systems to perform the required process control and system protection as well as support the local operator functions. In some cases more than one PLC is provided.

B. Proprietary software specifically designed to operate with the PLC hardware. The software provides all the advanced functionality required for the most complex of control schemes as well as including facilities for software documentation and fault analysis.

C. Redundant process network communication modules make LCC data available to the CCS equipment.

D. Interfaces for LAN or remote I/O allowing the transfer of data between the LCC control equipment and the related process equipment.

E. Local Operator Interface (LOI), where required, to provide the operator with a process visualization, a display of equipment status and operating data, and the facility to transfer control of the related process system from local to remote control.

F. Regulating control valve controllers, where required. These are rack-mounted devices with proprietary hardware and software-based operating systems.

G. Redundant UPS-backed power supplies to ensure that continuous operation of the LCS in all power conditions.

3.5.9.2.3 Control System Interfaces

While the Plant Control System (PCS) provides the primary control for the process areas, there are several specialized monitoring and control systems that interface with and are integrated into the PCS for supervisory monitoring and control, as follows:

A. Centrifuge Monitoring System. This system is a stand-alone, standard system developed by Urenco that provides detailed status conditions of each centrifuge during run-up and normal operation. The system is provided for investment monitoring and equipment protection.

B. Centrifuge Drive System. Each drive system provides power for the centrifuge motors of one cascade, and provides the speed control and status condition to the operator, as well as providing the controls for isolating and connecting the centrifuges to the drive converters.

C. Uranium Hexafluoride Inventory System (HIS). This is a site-based system, providing the operators with information about the current UF_6 situation at the site. The PCS system, through the LCCs, provides data to this system regarding in-process operations.

D. Criticality Accident Alarm System (CAAS). This system is provided to detect and alarm in the unlikely event of a criticality accident. The CAAS is completely stand-alone for safety reasons, but alarm signals are interfaced to the PCS for centralized alarm and event recording purposes.

In addition to these specialized systems, there are several auxiliary systems that are interfaced with the PCS, as follows:

- Product Liquid Sampling System
- Fire Protection System
- Compressed Air System
- Liquid Effluent Collection and Treatment System
- Gaseous Effluent Vent System
- Nitrogen Supply System
- Hot Water System
- HVAC systems
- HVAC Cooling Water System
- Electrical System
- Environmental and Continuous Air Monitoring Systems.

These systems have simple interfaces to the PCS, are supervisory in nature, and are not provided with control interfaces at the LCS level.

In addition to these systems identified above, there are several specific process systems that are stand-alone, self-supporting and self-contained, complete with all wiring and controls:

- Solid Feed Stations
- Product and Tails Pumping Trains
- Low Temperature Take-off Stations

- UF_6 Cold Traps
- UF_6 Cold Trap Heater/Chiller Units
- Vacuum Pump/Chemical Trap Sets.

Each unit has a self-contained control system that provides complete control and protection functionality, fault analysis, and operator interface when required. Protection provided by the process system is designed to be simple, local and direct and totally isolated from the supervisory protection provided by the PCS. The interface between these process systems and the PCS for protection actions is simple and hardwired and always made at the LCS level.

3.5.9.2.4 Training System

The PCS training system is a stand-alone system that replicates the PCS in all operational functions. The system consists of a tutor station; operator station and hardware cabinet that contains equipment that replicates the CSS and LCS systems and PCS networks.

The training system provides two main functions, software testing and commissioning, and operator training. The training system is used to develop both the hardware and software of the PCS from detail design through system acceptance. The system allows the developer to simulate and test all aspects of the process, including controls and interlocks. Also, because the training operator interface is identical to the PCS operator stations, trainees can easily learn how to respond to operational and alarm conditions and quickly acclimate to the on-line PCS.

3.5.9.2.5 Process Instrumentation and Wiring

The instrumentation associated with the PCS is generally limited to the measurement of absolute pressure and temperature as well as control/monitoring of the process by means of control/solenoid valves with associated valve position indication.

The UF_6 process systems generally operate below atmospheric pressure and are monitored by absolute pressure transducers qualified for the process. These instruments have standardized pressure ranges and are provided with process connections that allow in-place calibration to take place. All pressure transducers are connected directly to and are powered by their process associated LCC.

All temperature measurement elements are non-intrusive (surface mount) types that are: Standard RTD PT100, Class-A, and 3-wire minimum. All temperature elements are connected directly to the LCC mounted PLC I/O cards.

The PCS interfaces with two types of process valves, modulating control valves and automatic on/off valves. The modulating control valve is a servo motor driven device that has its own controller mounted within the LCC. The valve controller receives position demand signals from the PCS via the LCC-mounted PLC and positions the valve where demanded, providing position feedback to the PLC. Automatic on/off valves are solenoid-operated valves, with open and closed limit switches for positive feedback to the PLC.

All instruments and control wiring are wired directly back to its associated LCC. To reduce the likelihood of common-mode failures junction boxes and multi-conductor cables are not used. Wherever possible, routing of cables for individual equipment or systems is kept separate.

Conversion of process signals is kept to a minimum with field instrumentation wired directly to PLC inputs and outputs. The PLC inputs and outputs are fully isolated with each instrument and valve signal such that common-mode interference is minimized.

3.5.9.3 Safety Considerations

The Plant Control System (PCS), when tied to all auxiliary systems is designed with these priorities in mind:

- Advise adverse conditions for safety of the public, environment, and facility personnel
- Protection of plant assets
- Production protection (maximize process availability).

Of paramount importance is the design priority given to safety of the public, environment, and facility personnel. The process is safe by design, normally operating at sub-atmospheric pressures, and shutdown systems are automatic, with no operator response or intervention required.

The PCS is required for remote operation, production protection and asset protection. It is not required and does not play a role in the direct protection of the public or environment. In all instances, where required, protection is carried out by the local control and protection systems of the individual process equipment. The PCS, including the hardwired bus system (described below) is not an IROFS.

For protection of facility assets and production, multiple design features are provided, including:

A. Redundant Hardware and Control Networks. The level of CCS redundancy provided in terms of operator stations, servers, and networks provides a high level of availability. At the CCS level, the architecture is designed in such a way that no single failure will prevent operators from controlling and monitoring the process. The subsystems of the CCS (operator stations, overview screens and servers) are provided with dual power supplies, and the process control network is redundant for maximum availability.

B. Inner/Outer Protection Envelope (Cascades). Each Cascade has two PLC systems in their respective LCC, a control PLC and an investment protection PLC. The control PLC provides normal cascade operating functions, an inner protection “envelope” and the communications interface to the CCS. The protection PLC only has a protection function that provides an outer investment protection “envelope” which sets the cascade to a safe state should the control PLC fail to control and protect within the inner protection envelope. In addition, the two PLCs constantly handshake to ensure they are synchronized. The cascade goes into safe state if the PLCs fail to maintain synchronization.

C. 1 out of 2 Logic. In specific areas, two instruments are provided for redundancy and process availability. These instruments are wired to separate analog input modules in

their respective PLC. If either analog signal exceeds the programmed signal threshold, the software alarms the condition and the program recognizes it as a “tripped” condition and reacts accordingly.

D. 2 out of 3 Logic. In specific areas, three instruments are provided for redundancy. These instruments are wired to separate analog input modules in their respective PLC. If any one analog signal exceeds the program signal threshold, the software notes the condition, but the program ignores the condition. If two signals exceed the threshold the software alarms the condition and the program recognizes it as a “tripped” condition and reacts accordingly.

E. Hardwired, Failsafe 24vdc Digital Bus. When investment protection instrumentation is wired into a PLC, it is tied together in logic to drive an output, either wired in series or parallel depending on the protection function. These outputs are wired into a hardwired, failsafe 24vdc digital bus that is wired into the protection PLC of the process equipment. If the bus fails to maintain its 24vdc level, due to a failure of the 24vdc power or a failure of the input that drives the output, the process equipment shuts down or goes into a safe state as required. This hardware bus wiring and logic is not considered or intended to be a “safety system” in terms of personnel or environmental safety. It is provided for asset protection only.

F. Operational Redundancy. As described earlier, the architecture of the control system follows the architecture of the process plant. Where operational redundancy is provided, control system redundancy is provided. In this manner, common mode failure is minimized and process availability is maximized.

For specific details regarding the role of the PCS in the control and protection of the process equipment, refer to the process control descriptions included in previous sections of Chapter 3.

There are no IROFS associated with the Plant Control System. For a complete listing of IROFS, see Section 3.8, IROFS.

3.5.10 Standby Diesel Generator System

The Standby Diesel Generator System provides backup 480 volt power to the NEF during a loss of normal power. The Standby Diesel Generator System is not a requirement for safe operation of the plant and is installed to provide protection of investment only.

3.5.10.1 System Description

The Standby Diesel Generator System is comprised of two, 100% rated generators that supply the total backup power required. The Standby Diesel Generator System is installed in the Central Utilities Building. In the event of normal power failure, the Standby Diesel Generator System maintains plant services that protect the capital investment.

The functional requirement of the Standby Diesel Generator System is to provide backup power within approximately 10 seconds after a normal power interruption. There is sufficient fuel storage capacity to operate the system at rated capacity until the process equipment is run to standstill.

3.5.10.2 Major Components

The following are the major Standby Diesel Generator System components:

A. Diesel Generator Package units with engine, generator, controls, cooling system and diesel fuel day tank with leak containment

B. Diesel Fuel Bulk Storage Tanks with spill and leak detection and containment

C. Diesel Fuel Pumps and Controls

D. Diesel Fuel Hand Pumps.

3.5.10.3 System Interfaces

The Standby Diesel Generator System interfaces with the following plant systems:

A. The Plant Control System (PCS) monitors the status and operation of the Standby Diesel Generator System.

B. The Utility Water System supplies fill and make-up water to the generator cooling system. No make-up water is required by the diesel generators during operation.

C. The Electrical System provides power to maintain the charge on the electrical starter batteries during normal plant operation. This system receives power from the Standby Diesel Generator System during loss of normal power supply.

3.5.10.4 Operational Characteristics

This system is designed for high reliability. Each generator normally is in standby mode and operates on an intermittent basis.

3.5.10.4.1 Routine Operation

The switchgear where the generators are connected is normally supplied power through the utility dual service, the site dual power distribution system and dual step-down transformers. If the normal power supply to a generator switchgear is lost a demand for standby power is created. Each affected diesel generator automatically starts-up and restores the power supply within approximately 10 seconds after the demand for standby power. When the normal power supply has been restored to each switchgear, the associated generator is manually shut down and returned to stand-by status.

Periodic operational test runs are conducted on each Standby Diesel Generator System.

The generator diesel fuel day tanks are monitored and maintained at full storage capacity by an automatic fuel supply system.

3.5.10.4.2 Non-routine Operation

A. Equipment Failure. This system is designed with a high degree of equipment redundancy to provide reliable operation. The standby power loads are divided between

the two generators to minimize the impact on operations if one generator fails to operate when needed. Redundant diesel fuel tank pumps are used to transfer diesel fuel from the bulk storage tanks to the diesel day tanks. In the event of failure of the normal pumps, hand pumps are provided.

B. Instrument Failure. Failure of a level control instrument on a diesel day tank could result in an inadequate supply of fuel to a standby generator and subsequent generator shutdown.

C. Instrument Air Failure. Failure of instrument air has no impact on this system. Pneumatic operated instrumentation is supplied with control air by the standby generator package units.

D. Operator Error. Operation of any pump in a blocked-in or dry condition may result in damage to the pump. The operational sequence of the standby generators is automatic. If the fuel pumps fail, it is necessary for operators to set up the proper valve positioning and manually operate a hand pump.

3.5.10.5 Safety Considerations

Failure of this system will not endanger the health and safety of the public. Nevertheless, redundancy is provided in the major components for reliability to provide investment protection.

There are no IROFS associated with the Standby Diesel Generator System. For a complete listing of IROFS, see Section 3.8, IROFS.

3.5.10.6 Diesel Fuel Spill Control and Leak Detection

Diesel fuel is stored on site in bulk storage tanks and the day tanks of the standby generators. Each of the tanks is provided with a secondary containment in the event of a tank leak or spill.

3.5.11 Nitrogen System

3.5.11.1 System Description

The Nitrogen System provides gaseous and liquid nitrogen to users from a vendor-supplied liquid nitrogen storage tank. The liquid nitrogen storage and distribution system consists of four tanks. The nitrogen storage tanks are located outside, adjacent to the area that they serve. The Nitrogen Systems also provide liquid nitrogen via cryogenic piping to four dispensing stations. Two dispensing stations are located inside the Separations Building to facilitate the filling of portable Dewars. One dispensing station is located in the TSB and one is in the Centrifuge Assembly Building. Gaseous nitrogen is generated in the nitrogen system and piped throughout the Separations Building. It is used for line purging, pressure testing, and blanketing equipment in UF_6 service.

The four Nitrogen Systems are vendor-supplied packaged systems. Each unit consists of a liquid nitrogen storage vessel, a pressure build-up coil, a duplex vaporizer, associated instrumentation, and cryogenic piping. The system is illustrated in Figure 3.5-28, Process Flow

Diagram, Nitrogen System, Sheets 1 through 3. The functional requirements of the Nitrogen System are provided in Table 3.5-8, Nitrogen System Design Parameters.

The functional requirements of the Nitrogen System are to provide a 30-day supply of liquid and gaseous nitrogen to the users.

3.5.11.2 Major Components

The system contains the following equipment:

Nitrogen package unit. The liquid nitrogen storage tank is sized to supply 30 days of nitrogen based on normal operating conditions. Each of the four units consists of the following components:

Liquid N_2 storage vessel type	Vertical, double walled
Capacity	9464 L (2500 gal)
Duplex vaporizer	Air exchanger
Vaporization capacity	170 m^3/hr (100 scfm) continuous
Pressure build-up coil	Air exchanger
Pressure relief	Yes

Distribution Piping. Vacuum insulated cryogenic piping is used for the liquid transfer lines. Gaseous nitrogen lines are fabricated from carbon steel or copper.

3.5.11.3 System Interfaces

The Nitrogen System interfaces with the following plant systems.

A. The Cascade System uses gaseous nitrogen for blanketing centrifuges and cascades during construction. Liquid nitrogen is supplied to mobile pump sets.

B. The UF_6 Feed System uses gaseous nitrogen to blanket the insulation box at the UF_6 cold trap unit and purge distribution piping at the feed cylinders.

C. The Product Take-off System uses gaseous nitrogen to blanket the insulation box at the UF_6 cold trap unit and purge distribution piping at the product cylinders.

D. The Tails Take-off System uses gaseous nitrogen to purge distribution piping at the Uranium Byproduct Cylinders (UBCs).

E. The Product Liquid Sampling System uses gaseous nitrogen to purge the sample manifold in each Product Liquid Sampling Autoclave. The Product Liquid Sampling Autoclaves are also pressurized with gaseous nitrogen.

F. Nitrogen is also used for purging in pump replacement operations and in other miscellaneous process gas system maintenance operations, e.g. valve replacement.

G. The Electrical System provides power to the electric heater and the instrumentation in the Nitrogen System.

H. The DI water storage tank uses nitrogen for blanketing.

I. The cylinder pressure test and pump out system in the ventilated room of the Technical Services Building uses gaseous nitrogen for testing and purging.

J. The Mass Spectrometry, Environmental Monitoring and Chemical Labs also use gaseous nitrogen.

3.5.11.4 Operational Characteristics

The Nitrogen System is designed to supply liquid and gaseous nitrogen on demand.

3.5.11.4.1 Routine Operation

Liquid nitrogen is delivered to the four outside liquid nitrogen storage tanks by truck. Liquid nitrogen is transferred from the outside storage tanks through vendor-supplied double wall vacuum insulated cryogenic piping to two dispensing stations located inside of the Separations Building, and one each for the TSB and CAB. Portable Dewars are filled at the dispensing station and are used to transport the liquid nitrogen to the points of use. Gaseous nitrogen is generated by vaporizing liquid nitrogen through an ambient air vaporizer. Two vaporizers are provided to assure continued production of gaseous nitrogen when one vaporizer is being defrosted. A pressure regulator prevents storage tank over-pressure by releasing tank boil-off nitrogen to the gaseous nitrogen distribution piping. A pressure build-up coil maintains nitrogen storage tank pressure at 3.1 barg (45 psig) for transfer of liquid nitrogen.

Storage tank back pressure control valves vent excess nitrogen to the atmosphere in the event that tank boil off rate exceeds nitrogen consumption. Safety relief valves are provided to protect against tank over-pressurization. The safety relief valves on the tanks are set for 16.2 barg (235 psig.) Relief valves are also provided at users per Figure 3.5-28 and are typically set for 950 mbarg (13.8 psig).

Automatic switching valves divert liquid nitrogen to spare vaporizers during defrost cycles, and a manual valve is provided at the liquid nitrogen dispensing station for filling Dewars.

Pressure regulating valves in gaseous nitrogen supply lines maintain distribution pressure. There are four subsystems designed to distribute gaseous nitrogen; the four subsystems operate at 2.4 barg (35 psig). The distribution is shown on Figures 3.5-28, sheet 2 of 3 and sheet 3 of 3.

3.5.11.4.2 Non-routine Operation

A. Equipment Failure. This system is not considered critical to facility operation and spare components are not installed. Dual vaporizers permit continuous production of gaseous nitrogen and provide some redundancy in the event of failure of one of the vaporizers. A small inventory of liquid nitrogen is available from the Dewars in the event of an interruption of the liquid nitrogen transfer line. In addition, the four tanks add redundancy.

B. Instrument Failure. Instrument failure may lead to over-pressurization of the liquid nitrogen storage vessel. A pressure relief valve is provided on the tank to protect against over-pressurizing the tank.

C. Instrument Air Failure. Instrument air failure does not affect this system. In the event of instrument air failure, the vaporizer diversion valves fail open and both vaporizers are placed into service.

D. Instrument Failure. Instrument failure of system or header regulators could cause overpressurization of the gaseous system. Multiple relief valves are provided to protect against overpressure.

3.5.11.5 Safety Considerations

Failure of this system will not endanger the health and safety of the plant personnel or the public.

There are no IROFS associated with the Nitrogen System. For a complete listing of IROFS, see section 3.8, IROFS.

3.5.12 Liquid Effluent Collection and Treatment System

Various types of aqueous and non-aqueous liquid wastes are generated in the facility. These effluents may be contaminated, potentially contaminated with low amounts of contamination, or non-contaminated.

A Liquid Effluent Collection and Treatment System is located in the Liquid Effluent Collection and Treatment Room in the TSB. The Liquid Effluent Collection and Treatment System equipment location and arrangement is shown in Figure 3.5-29, Liquid Effluent Collection and Treatment Room, Equipment Arrangement. Non-contaminated aqueous effluents that are generated are collected, monitored for contamination, and discharged directly to the Treated Effluent Evaporative Basin (TEEB) if found to meet all regulatory and administrative requirements. Non-aqueous liquid wastes that are generated are collected and disposed of in accordance with all federal, state, and local regulations and in accordance with good and accepted industrial practice. All effluent collection, treatment, and disposal is done with respect to the safety of all personnel and in strict accordance with all federal, state, and local regulations. All contaminated effluents are handled to keep radiation doses to operating personnel and the public as low as reasonably achievable (ALARA).

3.5.12.1 Aqueous Liquid Effluents

Quantities of radiologically contaminated, potentially radiologically contaminated, and non-radiologically contaminated aqueous liquid effluents are generated in a variety of operations and processes in the TSB and in the Separations Building. All aqueous liquid effluents generated in the TSB are categorized as contaminated, potentially contaminated, or non-contaminated based on their uranic content. The majority of all potentially radiologically contaminated aqueous liquid effluents are generated in the TSB. All aqueous liquid effluents generated in the TSB are collected in tanks that are located in the Liquid Effluent Collection and Treatment Room in the TSB. The collected effluent is sampled and analyzed to determine if treatment is required before release to the TEEB.

3.5.12.1.1 System Description

3.5.12.1.1.1 Citric Acid

When the Citric Acid Tank in the Decontamination Workshop is drained, all the effluent is transferred to the Spent Citric Acid Collection Tank in the Liquid Effluent Collection and Treatment Room (see Figure 3.5-30, Process Flow Diagram, Spent Citric Acid). A “sludge” remains in the bottom of the Citric Acid Tank. This “sludge” consists primarily of uranium and metal particles. This sludge is flushed out with DI water. The combination of the sludge and the DI water also goes to the Spent Citric Acid Collection Tank. The spent citric acid effluent/sludge contains the wastes from the Sample Bottle and Flexible Hose Decontamination Cabinets, which are manually transferred to the Citric Acid Tank in the Decontamination System. The contents of the Spent Citric Acid Collection Tank are constantly agitated to keep all solids in suspension and to provide a homogeneous solution. This is necessary to prevent build-up of uranic material in the bottom of the tank.

3.5.12.1.1.2 Degreaser Water

When the Degreaser Tank in the Decontamination Workshop is drained, all the effluent is transferred to the Degreaser Water Collection Tank in the Liquid Effluent Collection and Treatment Room (see Figure 3.5-31, Process Flow Diagram, Degreaser Water). A “sludge” remains in the bottom of the Degreaser Tank after the degreasing water is drained. This “sludge” consists primarily of Fomblin oil and uranium. This sludge is flushed out with DI water. The combination of the sludge and the DI water also goes to the Degreaser Water Collection Tank. The contents of the Degreaser Water Collection Tank remain agitated to keep all solids in suspension and to provide a homogeneous solution. This is necessary to prevent build-up of uranic material in the bottom of the tank. Since this effluent contains Fomblin oil, it is not possible to send the degreaser water to the Precipitation Treatment Tank for treatment. Therefore, the Fomblin oil must be removed first.

For Fomblin oil removal, the contents of the Degreaser Water Collection Tank circulate through a small centrifuge. The oil and sludge are centrifuged off, collected in a container, and sent for offsite low-level waste disposal.

3.5.12.1.1.3 Laboratory Effluent

Aqueous laboratory effluents with uranic concentrations are sampled to determine their uranic content and then pumped from the labs to the agitated Miscellaneous Effluent Collection Tank in the Liquid Effluent Collection and Treatment Room (see Figure 3.5-32, Process Flow Diagram, Miscellaneous Effluent). Floor washings are sampled to determine their uranic content and then manually emptied into the Miscellaneous Effluent Collection Tank. Condensate may be either manually transported or pumped through piping to the tank after sampling.

3.5.12.1.1.4 Laundry

All washing machine water is discharged from the clothes washers to the Laundry Effluent Monitor Tanks in the Liquid Effluent Collection and Treatment Room (see Figure 3.5-33, Process Flow Diagram, Laundry Effluent). Due to the very low contamination of this effluent and the constant flow into these tanks, they are not agitated. Samples of the effluents are regularly taken to the laboratory for analysis. Lab testing determines pH, soluble uranic content, and insoluble uranic content. The analysis determines if the effluent meets regulatory requirements and administrative levels set prior to release into the TEEB. Previous operating experience indicates that the clothes washed contain very small amounts of UO_2F_2 and trace amounts of UF_4.

The laundry effluent is expected to meet the requirements mentioned above for release. If the effluent is determined to meet all the requirements, it is released to the TEEB. If the laboratory analysis shows it is not in conformance, then the effluent is held in one of the Laundry Effluent Monitor Tanks. Depending on the laboratory analysis, it can either be sent to the Precipitation Treatment Tank for processing through the treatment system, or it can be sent off-site for treatment and disposal as low-level waste.

3.5.12.1.1.5 Washes and Showers

All water from the personnel hand washes and showers in the TSB, Separations Building Modules, Blending and Liquid Sampling Area, and the Centrifuge Test and Post Mortem Areas goes to the Hand Wash / Shower Monitor Tanks in the Liquid Effluent Collection and Treatment Room (see Figure 3.5-34, Process Flow Diagram, Hand Wash/Shower Effluent). Since these effluents are expected to be non-contaminated, there is no need to provide agitation in these tanks. Samples of the effluents are regularly taken to the laboratory for analysis. Lab testing determines pH, soluble uranic content, and insoluble uranic content. The analysis determines if the effluent meets all federal, state, and local requirements in addition to administrative levels set prior to release to the TEEB. If it is determined the effluent meets all the requirements, it is released to the TEEB. There is little probability these effluents are contaminated. Therefore, it is assumed the effluent always meets the requirements for release to the TEEB. No provisions are provided for any treatment of these effluents.

3.5.12.1.1.6 Precipitation Treatment Tank

When a batch has been added to, processed at, sampled at, and analyzed at the Spent Citric Acid Collection Tank, Degreaser Water Collection Tank, or Miscellaneous Effluent Collection Tank, the contents are transferred to the Precipitation Treatment Tank.

The Precipitation Treatment Tank (see Figure 3.5-35, Process Flow Diagram, Precipitation/ Treatment) is used to remove the majority of the uranium that is in solution. After the effluent is transferred to the Precipitation Treatment Tank, a precipitating agent, such as potassium hydroxide (KOH) or sodium hydroxide (NaOH), is added. The addition of the precipitating agent raises the pH of the effluent to the range of 9 to 12. This makes the soluble uranium compounds become insoluble compounds that precipitate from the solution. The tank contents are constantly agitated to provide a homogeneous solution. The precipitated compounds are

then removed from the effluent by circulation through a small filter press. The material removed by the filter press is deposited in a container and sent for off-site low-level waste disposal.

The clean effluent from the filter press is re-circulated back to the Precipitation Treatment Tank. Depending on the characteristics of the effluent and the filter press design, the effluent may have to be circulated through the filter press numerous times to obtain the percent of solids removal required. A sample of the effluent is taken to determine when the correct amount of solids has been removed. When it is determined that the correct amount of solids have been removed, the effluent is transferred to the Contaminated Effluent Hold Tank.

3.5.12.1.1.7 Contaminated Effluent Hold Tank

The effluent in the Contaminated Effluent Hold Tank is transferred to the agitated Evaporator/Dryer Feed Tank (see Figure 3.5-36, Process Flow Diagram, Evaporator/Dryer). Acid is added via a small chemical addition unit to reduce the pH back down to 7 or 8. This is necessary to help minimize corrosion in the Evaporator/Dryer.

3.5.12.1.1.8 Evaporator/Dryer Feed Tank and Evaporator/Dryer

From the Evaporator/Dryer Feed Tank, the effluent is pumped to the Evaporator/Dryer. The Evaporator/Dryer is an agitated thin film type that separates out the solids in the effluent. The Evaporator/Dryer is heated by steam (generated by an electric boiler in the room) in a jacket or from an electric coil. As the effluent enters the Evaporator/Dryer, the effluent is heated, and the water is vaporized. The Evaporator/Dryer discharges a “dry” concentrate into a container located at the bottom of the Evaporator/Dryer. Container contents are monitored for criticality, labeled, and stored in the radioactive waste storage area. When full, the container is sent for shipment off-site to a licensed radioactive waste disposal facility. Liquid vapor exits the evaporator and is condensed in the Evaporator/Dryer Condenser, which is cooled with process chilled water.

The condensate from the condenser is collected in the Distillate Tank before being transferred to one of the Treated Effluent Monitor Tanks (see Figure 3.5-37, Process Flow Diagram, Treated Effluent Polishing). The effluent in these tanks is sampled and tested for pH and uranic content to validate compliance with regulatory and administrative guidelines prior to release to the TEEB. If the effluent test results are acceptable, then it is released to the TEEB. However, if the lab tests show the effluent does not meet regulatory and administrative guidelines, the effluent can be further treated. Depending on what conditions the lab testing show, the effluent is either directed back to the Evaporator/Dryer Feed Tank for another pass through the Evaporator/Dryer, or it can be directed through the Mixed Bed Demineralizers. After either option, the effluent is transferred back to a Treated Effluent Monitor Tank where it is again tested. When the lab tests are acceptable, the effluent is released to the TEEB.

3.5.12.1.2 Major Components

Handling and eventual disposition of the aqueous liquid effluents is accomplished in two stages, collection and treatment. All aqueous liquid effluents are collected in tanks that are located in the Liquid Effluent Collection and Treatment Room in the TSB.

Table 3.5-9, Liquid Effluent Collection and Treatment System, Collection Tanks, lists the collection tanks, their respective sizes, and the effluents deposited into them.

In addition to the listed tanks, which are used for effluent collection from the various areas throughout the plant, there are other tanks in the Liquid Effluent Collection and Treatment Room used for monitoring and treatment prior to release of the effluents to the TEEB.

These tanks, their size, and their purpose are listed in Table 3.5-10, Liquid Effluent Collection and Treatment System, Monitoring and Treatment Tanks.

3.5.12.1.3 Interfaces

The Liquid Effluent Collection and Treatment System interfaces with the following other plant systems and areas:

A. Decontamination Workshop. The spent citric acid waste and the spent degreaser water are pumped from this system to their respective tanks in the Liquid Effluent Collection and Treatment Room. Small amounts of floor washings from this area are also collected in the Miscellaneous Effluent Collection Tank.

B. Compressed Air System. This system provides air for any diaphragm pumps that may be used in the Liquid Effluent Collection and Treatment System in addition to any requirements for instrumentation or pneumatic controls in the room.

C. Deionized Water Supply Distribution System. The water is used for rinsing out the tanks and pumps in the system to prevent potential sludge build-ups.

D. Solid Waste Collection System. Solid waste from the filter press, centrifuge, and evaporator is collected in containers. This tank collects and handles other solid wastes, such as cloths and rags, and ensures that it is disposed of offsite appropriately.

E. Separations Building. Small amounts of floor washings and miscellaneous condensates from this area are collected in the Miscellaneous Effluent Collection Tank.

F. Ventilated Room. Small amounts of floor washings from this area are collected in the Miscellaneous Effluent Collection Tank.

G. Vacuum Pump Rebuild Workshop. Small amounts of floor washings from this area are collected in the Miscellaneous Effluent Collection Tank.

H. UF_6 Handling Area. This area of the facility containing UF_6 has small amounts of floor washings that are collected in the Miscellaneous Effluent Collection Tank.

I. Personnel Hand Wash and Shower Areas. Effluent water is generated from employees who work in contaminated areas washing their hands and taking showers after dealing with contaminated materials. This is not expected to be contaminated effluent.

J. Laundry System. Effluent water from the washing machines enters the Liquid Effluent Collection and Treatment System if it is found to be contaminated.

K. Treated Effluent Evaporative Basin. Receives treated and non-contaminated effluent from the Liquid Effluent and Treatment System.

L. Chilled Water Distribution System. Chilled water is used to condense the vaporized effluent downstream of the evaporator.

M. Electrical System. Power is required for the process for some of the equipment and instrumentation, .

N. Laboratories. Liquid effluent from the Chemical Laboratory, the Environmental Monitoring Laboratory, and the Mass Spectrometry Laboratory are collected in the Miscellaneous Effluent Collection Tank.

3.5.12.1.4 Safety Considerations

Equipment for effluent collection and treatment in the Liquid Effluent Collection and Treatment Room in the TSB are separated into various radiological zones depending on contamination levels. The Laundry Effluent Tanks and the Wash/Shower Tanks are generally non-contaminated (or contain very low levels of uranium) and are located together in one corner of the room. The tanks with higher contamination are located in the opposite corner of the room. This separation helps keep exposures to ALARA (as low as reasonably achievable.) All tanks have overflow piping and atmospheric vents. The tanks also have inspection hatches to ensure that they are completely empty after a batch has been processed.

Tank contents are sampled and analyzed before being transferred to another tank or out of the system. Bookkeeping measures ensure that no tank holds more than a safe mass of uranium.

The Spent Citric Acid Collection Tank, Degreaser Water Collection Tank, Miscellaneous Effluent Collection Tank, and Precipitation Treatment Tank are all located in a contained area. The containment consists of a curb around all the above-mentioned tanks. The curbed area is capable of containing at least one catastrophic failure of one tank (1325 L (350 gal), minimum). In the event of a tank failure, the effluent in the confined area is pumped out with a portable pump set.

Due to the low probability of a uranic contamination in the Laundry Effluent Tanks or the Hand Wash/Shower Monitor Tanks, no curbed confinement of these tanks is provided in the event of a catastrophic failure. Any small amounts of these effluents that leak onto the floor drain to a floor sump. The effluents in this sump are pumped out with a portable pump set.

There are no IROFS associated with this portion of the Liquid Effluent Collection and Treatment System. For a complete listing of IROFS, see Section 3.8, IROFS.

3.5.12.1.5 Operating Characteristics

The uranium content of tanks is important to prevent a criticality accident. None of the tanks in the collection and treatment system are “geometrically safe” or “geometrically favorable”. Administrative controls (by mass) are applied to prevent a criticality accident.

The pH of the Dryer Feed Tank is important to minimize the corrosion in the equipment. The pH is always maintained within the manufacturer’s recommended range.

Aqueous radiologically contaminated liquid effluents are processed on-site to remove the uranic content. After treatment these effluents and all non-contaminated aqueous effluents are discharged to the TEEB. Reduced volume, radiologically contaminated wastes that are produced as a by-product of the treatment system, as well as contaminated non-aqueous wastes, are packaged and shipped to a licensed radioactive waste disposal facility.

3.5.12.2 Non-Aqueous Liquid Effluents

Various non-aqueous liquid effluents are generated throughout the plant. The majority of these are non-radiologically contaminated and are generated outside areas in which radioactive materials are handled. A small percentage may be radiologically contaminated. These wastes are ones that cannot be collected and treated in the Liquid Effluent Collection and Treatment System because of their chemical characteristics (i.e., they cannot be processed through the system because they might damage or decrease the performance of the equipment in the treatment system). These chemicals also might be EPA hazardous chemicals that cannot enter the aqueous waste stream that goes to the TEEB. Special treatment and/or disposal methods are required for these wastes. They are not mixed with any of the effluent streams in the Liquid Effluent Collection and Treatment System.

3.5.12.2.1 System Description

Non-aqueous liquid wastes are generated throughout the plant. These wastes are collected, identified, and temporarily stored in a waste storage area. Appropriate containers are used for storage of all wastes to preclude leakage, intermixing, evaporation, and spillage. All potentially radioactive wastes are stored in a criticality safe manner to preclude a criticality accident.

The non-aqueous portion of the liquid effluent system arises from the following areas:

- Radiologically contaminated solvents from Chemical Laboratory, Environmental Monitoring Laboratory, and the Decontamination Workshop.
- Non-radiologically contaminated effluents from the General Mechanical, Electrical and Instrumentation Workshop, Diesel Generator Area, CUB, CAB, and the Laboratories.

The following non-aqueous liquid wastes are collected, packaged, stored and disposed of:

A. Lubrication Oils and Greases. Consist of various hydrocarbon lubricants collected during maintenance activities of maintenance equipment, plant vehicles, utilities equipment (such as air compressors and chillers), and from normal workshop activities. None of these oils or greases are radiologically contaminated. (Fomblin oil is excluded from this non-aqueous waste disposal.)

B. Solvents. Non-radiologically contaminated solvents are produced in the maintenance workshops and in the Centrifuge Assembly Building. Contaminated solvents arise from the various laboratories. These are handled as “mixed” waste and sent offsite for processing and disposal by a licensed facility.

C. Laboratory Chemicals. Waste chemicals are produced in the various laboratories.

D. Miscellaneous Wastes. Special wastes need special disposal or are recycled as part of good industry practice. Examples of such materials are ethylene glycol coolants and refrigerants.

Wet solid wastes and Fomblin oil are not handled in the same manner as these other non-aqueous wastes.

The non-aqueous liquid wastes are collected manually in special containers. All waste containers are identified to show the contents (material type), potential for being radioactive, and potential for being hazardous. Each waste container is also marked with a unique identification number. A determination is then made as to whether analysis is needed to determine if a waste is radioactive or hazardous. A typical method for testing liquid waste for radioactive contamination is with a gamma detection system. Liquid wastes that cannot be processed in the Liquid Effluent Collection and Treatment System are stored in the SWCR of the TSB prior to being sent off-site for processing and disposal. All liquid waste storage areas are designed to collect and contain spills and leakage in a safe manner.

Separate storage areas are provided for industrial, hazardous, and radioactive wastes.

3.5.12.2.2 Design Considerations

The Liquid Effluent Collection and Treatment System and the system to collect non-aqueous wastes are sized to process effluents generated in an average year under normal conditions. The systems are designed with some extra capacity to handle upset or abnormal volumes. In the event of a catastrophic failure of the treatment system, provisions can be made to send all effluent off-site to a licensed processing and waste disposal facility.

All piping and equipment in the system that could contain potentially radioactive fluids are constructed of appropriate corrosion resistant metallic or plastic materials. None of the effluents are of such a chemical nature that special materials of construction is necessary. Industrial-grade piping and equipment is used.

All process piping is designed in accordance with American Society of Mechanical Engineers, ASME B31.3-2002, Process Piping (ASME, 2002). To provide system integrity and prevent leaks, welded construction is used everywhere practical. All collection tanks are designed in accordance with American Water Works Association (AWWA), American Petroleum Institute (API), or ASME Standards. The tanks are vertical cylindrical tanks with conical or dished-head bottoms to promote drainage. All outlets are at the low point of the tank – no space exists for solids to accumulate. All tank vents are open to atmosphere and directed away from personnel/equipment; all tank overflows are directed to sumps or do not pose a serious hazard. All tanks have inspection hatches to ensure the tanks are emptied. Mixers or recirculation loops are provided for each tank that requires mixing prior to sampling to ensure that each sample is representative of the tank contents.

None of the tanks are “geometrically safe” or “geometrically favorable.” Criticality is controlled by administrative controls. The entire system is designed so that all operation and maintenance activities can be performed while keeping personnel radiation exposures ALARA.

There are no IROFS associated with the Liquid Effluent Collection and Treatment System. For a complete listing of IROFS, see Section 3.8, IROFS.

3.5.13 Solid Waste Collection System

Solid wastes are produced in a number of plant activities and require a variety of methods for treatment and disposal. Solid wastes are categorized into wet solid waste and dry solid waste due to differences in handling, storage, and disposal requirements. Dry solid wastes for this facility contain, as defined in 10 CFR 61.56 (a)(3) (CFR, 2003a), "as little free standing and non-

corrosive liquid as is reasonably achievable, but in no case shall the liquid exceed 1% of the volume." Wet solid wastes, for this plant, are defined as those that have as little free liquid as reasonably achievable, but have no limit with respect to percent of volume.

The Solid Waste Collection System is simply a group of methods and procedures, all applied as appropriate to the various solid wastes. Each individual waste is handled differently according to its unique combination of characteristics and constraints. Wet and dry solid wastes are described separately below.

3.5.13.1 Wet Solid Wastes

The wet waste portion of the Solid Waste Collection System handles all radiological, hazardous, mixed, and industrial solid wastes from the plant that do not meet the above definition of dry solid waste. The system assures the waste is properly handled, stored, and disposed of for the protection of the public, the plant workers, and the environment.

3.5.13.1.1 System Description

The Solid Waste Collection System handles several different types of wet solid waste: wet trash, oil recovery sludge, electrostatic precipitator sludge, oil filters, resins, degreaser sludge, and uranic waste precipitate. The system collects, identifies, prepares, records, and stores these wastes for shipment.

Wet solid wastes that are generated in the plant are divided into radioactive, hazardous, mixed, or industrial waste categories. Mixed waste is that which includes both radioactive and hazardous waste. Industrial waste does not include either radioactive or hazardous waste. Each waste category is segregated during collection, during packaging for shipment, and in storage.

This system, primarily consisting of a number of manual steps, has no major components. Minor components, such as container assay equipment, a container compactor, and a container weigh scale, are employed when appropriate for packaging of waste in the SWCR of the TSB.

3.5.13.1.2 Interfaces

The wet solid waste portion of the Solid Waste Collection System interfaces with the Fomblin Oil Recovery System and the Liquid Effluent Collection and Treatment System. Handling of each waste type is described below.

3.5.13.1.2.1 Wet Trash

In this facility, trash typically consists of waste paper, packing material, clothing, rags, wipes, mop heads, and absorption media. Wet trash consists of trash that contains water, oil, or chemical solutions.

Generation of “radioactive” wet trash is minimized as much as possible. Trash with radioactive contamination is collected in specially marked plastic-bag-lined drums. These drums are located in Restricted Areas as necessary. Wet trash is collected in separate drums from dry

trash. When a drum of wet trash is full, the drum is then taken to the SWCR. The plastic bag is removed from the drum and sealed. The bag is then checked for leaks and excessive liquid, and the exterior is monitored for contamination. If necessary, excess liquids are drained and the exterior is cleaned. The trash is identified, packaged, labeled, and recorded. Collected radioactive trash is stored in an appropriate container in the SWCR until it can be shipped offsite for treatment and then disposal.

The radioactive trash is shipped to a Central Volume Reduction Facility (CVRF) that can process wet trash. The licensed CVRF reduces the volume of the trash and then repackages the resulting waste for disposal. The waste package is then shipped to a licensed radioactive waste disposal facility.

Trash with “hazardous” (CFR, 2003b) contamination is collected in special plastic bag-lined drums. When full, the drum is taken to the SWCR, the plastic bag containing wet trash is removed from its container, sealed, the exterior monitored for hazardous material, and the exterior cleaned if necessary. The trash is identified, packaged, labeled, and recorded. All hazardous trash is stored in the SWCR until it is shipped to a licensed hazardous waste disposal facility. To prevent accidental reactions, different types of hazardous materials are not mixed together.

Empty containers (CFR, 2003c) that at one time contained hazardous materials are considered waste if designated such by administrative guidelines. After such a container is emptied, it is resealed and taken to the SWCR for identification, labeling, and recording. The container can be handled as if it is hazardous waste and be shipped to a licensed hazardous waste processing facility for cleaning and/or disposal. Otherwise, the container is used to store compatible hazardous waste and to ship that waste to a licensed hazardous waste processing facility for processing and container disposal.

"Mixed" (CFR, 2003b) trash results from using wipes and rags with solvent on uranium-contaminated components. It is collected in appropriate containers and segregated from other trash. The waste is identified, packaged, labeled, recorded, and stored in accordance with regulations for both hazardous and radioactive wastes. Mixed waste is shipped to a facility licensed to process mixed waste. Waste resulting from the processing by the licensed facility is then forwarded to a qualified disposal facility licensed to dispose of the particular resulting waste.

“Industrial” trash is collected in specially marked receptacles in all parts of the plant. Trash that contains free liquids is dewatered before it is put into a receptacle. The trash from the Restricted Area is collected in plastic bags and taken to the SWCR for inspection to ensure that no radioactive contamination is present. The inspected trash and the trash from outside Restricted Area are then taken to one of several dumpsters around the plant. The trash is stored in these dumpsters until it is transported to a local landfill by a contract carrier.

3.5.13.1.2.2 Oil Recovery Sludge and Electrostatic Precipitator Sludge

The recovery process for Fomblin oil generates an oily sludge which is handled by this system. The sludge results from the removal of uranium and hydrocarbons from Fomblin (perfluorinated polyether) oil. Sodium carbonate, charcoal, and celite contribute to this sludge. Another source of contaminated oil sludge is the electrostatic precipitator for the Separations Building GEVS. A contracted radioactive waste processor will process the waste at an off-site location.

Alternatively, the waste may be shipped offsite to a licensed CVRF for volume reduction. Regulations and technology current at the time of waste production will dictate treatment methods. In either case the waste is disposed of at a licensed low-level radioactive waste disposal facility.

3.5.13.1.2.3 Oil Filters

Used oil filters are collected from the diesel generators and from facility vehicles. No filters are radioactively contaminated. The used filters are placed in containers and transported to the SWCR. There the filters are drained completely and transferred to a drum. The drained waste oil is drummed with other non-radioactive waste oil and handled appropriately. Once a drum is full of spent filters, absorbent material is added and the drum is sealed and labeled. The drums are shipped to an appropriate off-site licensed waste disposal contractor.

3.5.13.1.2.4 Resins

Spent ion exchange resin is collected from the Centrifuge Cooling Water Distribution System polishers. These resins are not radioactively contaminated. The spent resins are received, used, dewatered, and returned to an independent contractor for regeneration or disposal under a lease agreement.

Radioactively contaminated resin is collected from the Liquid Effluent Collection and Treatment System deionizers. Normally, the resins for deionizer operation are contained in a portable vessel suitable for disposal by the lease contractor. The vessel is disconnected, dewatered, sealed, and stored in the SWCR. The vessel of resin is shipped to a contractor for disposal in a licensed low-level radioactive waste disposal facility.

3.5.13.1.2.5 Degreaser Sludge

The Degreaser Tank in the Decontamination Workshop handles radioactive components. Sludge is pumped from the Degreaser Tank to the Degreaser Water Collection Tank and then to the Degreaser Water Centrifuge. The sludge discharge from the centrifuge is collected, packaged, labeled, and stored as radioactive waste. The waste is shipped to a facility licensed to process radioactive waste. Waste resulting from the processing is then forwarded to a qualified disposal facility licensed to dispose of the particular resulting waste.

The UF_6 Pump workshop handles only decontaminated components, so the sludge is collected, packaged, labeled, and stored in the SWCR as hazardous waste. This hazardous waste is shipped to a licensed hazardous waste disposal facility.

3.5.13.1.2.6 Uranic Waste Precipitate

Aqueous uranic liquid waste is processed in a precipitator filter press to remove most of the uranium prior to evaporation of the liquid stream in the Evaporator/Dryer (see Section 3.5.12, Liquid Effluent Collection and Treatment System). This aqueous waste is from the Miscellaneous Effluent Collection Tank, Spent Citric Acid Collection Tank, Degreaser Water Collection Tank, and the Laundry Effluent Hold Tank. The uranium is precipitated out of

solution and water is removed by the filter press. The remaining precipitate is collected, packaged, labeled, and stored in the SWCR. The waste is disposed of in a licensed low-level radioactive waste disposal facility.

3.5.13.1.3 Operating Characteristics

Since the "wet" solid waste system is actually a series of steps performed manually, the system description in the above paragraphs also serves to provide the system operating characteristics.

All solid radioactive waste is Class A low-level waste as defined in 10 CFR 61 (CFR, 2003d).

3.5.13.1.4 Safety Considerations

Failure of this system will not endanger the health and safety of the public. Nevertheless, design and operating features enhance public and worker safety. This system assures safety by containment of materials, by strict administrative procedural controls, and by systematic inspections of waste materials. Minor leaks and spills onsite would be collected by a temporary bund, from where these would be soaked up with mops and rags. Shipment of wastes offsite strictly adheres to regulations for packaging and transportation. The mass limit of fissile material prepared for offsite shipment shall not exceed the fissile material limits of 10 CFR 71, (CFR, 2003f). Appropriate protective clothing and respiratory equipment is required for plant workers as needed depending on the material being handled.

There are no IROFS associated with this portion of the Solid Waste Collection System. For a complete listing of IROFS, see Section 3.8, IROFS.

3.5.13.2 Dry Solid Wastes

The dry solid waste portion of the Solid Waste Collection System handles dry radiological, hazardous, mixed, and industrial solid wastes from the plant. The system assures the waste is properly handled and disposed of for the protection of the public, the plant workers, and the environment.

3.5.13.2.1 System Description

The dry solid waste portion of the Solid Waste Collection System handles several different types of waste: trash, activated carbon, activated aluminum oxide, activated sodium fluoride, HEPA filters, scrap metal, laboratory waste, and Evaporator/Dryer concentrate. The system collects, prepares, identifies, records, and stores these wastes for shipment in the SWCR.

Dry solid wastes that are generated in the plant are divided into radioactive, hazardous, mixed, or industrial waste categories. Mixed waste is that which includes both radioactive and hazardous waste. Industrial waste does not include either radioactive or hazardous waste. Each waste category is segregated during collection, during packaging for shipment, and in storage.

No major components are used in the handling of dry solid wastes. Minor components, such as container assay equipment, a container compactor, and a container weigh scale, are employed

when appropriate for packaging of waste in the SWCR. System interfaces, and techniques and procedures for handling each of the major waste types is provided below.

3.5.13.2.2 Interfaces

The dry waste portion of the Solid Waste Collection System interfaces with the following other plant systems and structures:

A. Gaseous Effluent Vent System for the TSB and the Separations Building. Prefilters, HEPA filters, and activated carbon filters from this system are handled in the Solid Waste Collection System.

B. Technical Services Building HVAC System. Filter elements of this system used to support the confinement ventilation function for the Cylinder Preparation Room, Decontamination Workshop, and Ventilated Room are handled in the Solid Waste Collection System.

C. Centrifuge Assembly Building. Filter elements from this building, including prefilters, HEPA filters, and activated carbon filters from the Centrifuge Test and Post Mortem Facilities Exhaust Filtration System, are handled in the Solid Waste Collection System.

D. Contingency Dump System. Activated sodium fluoride from this system is handled in the Solid Waste Collection System.

E. Ventilated Room. Adsorber vessels containing radioactively contaminated activated carbon, activated aluminum oxide, and sodium fluoride are emptied in this room.

F. Solid Waste Collection System (wet waste portion). Solid wastes that do not meet the requirements for liquid content are transferred to the dry waste portion of the Solid Waste Collection System.

G. Compressed Air System. Filter elements from this system are transferred to the Solid Waste Collection System.

H. UF_6 Process Vent Systems. Activated carbon and activated aluminum oxide are transferred from the UF_6 Feed System, Product Take-off System, Tails Take-off System, Product Liquid Sampling System, Product Blending System Cylinder test, and Ventilation Room Cylinder pump out systems to the Solid Waste Collection System for disposal.

I. Mobile Pump Sets. Activated carbon and activated aluminum oxide are transferred from these pump sets to the Solid Waste Collection System for disposal.

J. Administration Building HVAC System. Filter elements from this building are disposed of in the Solid Waste Collection System.

K. Decontamination Workshop. Contaminated material removed from equipment during disassembly are transferred to the Solid Waste Collection System. Contaminated metallic wastes may be transferred to the Decontamination Workshop for cleaning rather than disposal as radioactive waste. Metallic wastes and other unusable components that are successfully decontaminated in the Decontamination Workshop are transferred to the Solid Waste Collection System for disposal.

Wastes handled by this system are addressed below.

3.5.13.2.2.1 Dry Trash

Dry trash sources are the same as the wet trash sources, and dry trash is handled in much the same way as wet trash. Section 3.5.13.1.1, System Description, describes the handling of wet trash and should be referred to for details. Only the differences in wet and dry trash handling are provided below.

Steps to remove liquids are unnecessary for dry trash. The dry waste portion of the Solid Waste Collection System accepts wet trash that has been dewatered, as well as dry trash.

“Radioactive” trash is shipped to a licensed CVRF. The licensed CVRF reduces the volume of the trash and then repackages the resulting waste for disposal. Waste handled by the CVRF is disposed of in a licensed radioactive waste disposal facility.

Trash containing “hazardous” material is handled as described above with the wet waste portion of the Solid Waste Collection System.

Aerosol spray cans may be disposed of as industrial trash if they are first totally discharged and then punctured. Special receptacles for spray cans used in the Separations Building are provided and each can is inspected for radioactive contamination, total discharge, and puncture before it can be included with industrial trash.

"Mixed" trash is handled as described above with the wet waste portion of the Solid Waste Collection System. Mixed trash results from use of rags and wipes, with solvent, on radioactively contaminated components.

3.5.13.2.2.2 Activated Carbon

Activated carbon is used in a number of systems to remove uranium compounds from exhaust gases. Due to the hazard of airborne contamination, personal protective clothing and respiration equipment is used during activated carbon handling to prevent exposure of plant personnel. Administrative controls for shape, mass, and areal density, along with appropriate selection of storage containers, prevent criticality. Adsorber vessels containing the spent carbon are transported to the Ventilated Room where the activated carbon is removed from the filter vessel and placed in appropriate containers. The contents of the container are sampled to determine the quantity of ^{235}U present. The container is then sealed, the exterior is monitored for contamination, and the container is properly labeled. The container is then temporarily stored in the SWCR. Containers are sent to a licensed CVRF to reduce the volume of the waste, and the licensed CVRF then repackages the resulting waste for shipment to a licensed low-level radioactive waste disposal facility.

Carbon filters are also used in the laboratories where they can become contaminated with hazardous as well as radioactive material. The filters are handled according to their known service. Those potentially hazardous are handled as hazardous, and those potentially containing both hazardous and radioactive material are handled as mixed wastes. Each type of waste is collected, packaged, labeled, recorded, stored in the SWCR, and is then shipped to an appropriately licensed facility for processing/disposal of hazardous and/or mixed waste.

3.5.13.2.2.3 Activated Aluminum Oxide

Activated aluminum oxide is used in a number of systems to remove hydrogen fluoride (HF) from exhaust gases. Spent aluminum oxide is carefully removed, using personal protective equipment, from absorber vessels in the Ventilated Room to prevent the spread of contamination. The contents of a full container are sampled to determine the quantity of ^{235}U present. The container is then sealed, the exterior is monitored for contamination, and the container is properly labeled. The waste is stored in the SWCR until it is shipped to a licensed radioactive waste disposal facility.

Activated aluminum oxide is also used as a desiccant in the Compressed Air System. This aluminum oxide is not radioactively contaminated and is non-hazardous. It is disposed of in a landfill.

3.5.13.2.2.4 Activated Sodium Fluoride

Activated sodium fluoride (NaF) is used in the Contingency Dump System to remove UF_6 and HF from exhaust gases. The Contingency Dump System is not expected to operate except during transient conditions that occur during a power failure. The NaF is not expected to saturate during the life of the plant. However, if the system is used often and the NaF saturates, the adsorber vessel containing the spent sodium fluoride is transported to the Ventilated Room where the sodium fluoride is removed from the vessel and placed in appropriate containers.

The contents of the container are sampled to determine the quantity of ^{235}U present. The container is then sealed, the exterior is monitored for contamination, and the container is properly labeled. The container is then temporarily stored in the SWCR. Containers are sent to a licensed CVRF to reduce the volume of the waste, and the licensed CVRF then repackages the resulting waste for shipment to a licensed low-level radioactive waste disposal facility. It is expected that NaF will not require treatment and disposal until decommissioning.

3.5.13.2.2.5 Filter Elements

Prefilters and HEPA filters are used in several places throughout the plant to remove dust and dirt, uranium compounds, and hydrogen fluoride.

Filters associated with the HVAC System in the Centrifuge Assembly Building remove dust and dirt from the incoming air to ensure the cleanliness of the centrifuge assembly operation. When removed from the housing, the filter elements are wrapped in plastic to prevent the loss of particulate matter. These filter elements are not contaminated with radioactive or hazardous materials so disposal is with industrial trash.

Filters used in the GEVS, and the Centrifuge Test and Post Mortem facilities Exhaust Filtration System and the filters supporting the confinement function of the TSB HVAC System remove HF and trace uranium compounds from the exhaust air stream. When the filter elements become loaded, they are removed from the housings and wrapped in plastic bags to prevent the spread of radioactive contamination. Due to the hazard of airborne contamination, bag-in-bag-out type filter housings are used. Additionally, either special ventilation equipment or personal protective clothing and respiration equipment is used during filter element handling to prevent contamination of plant personnel. The filter elements are taken to the SWCR where a sample is

taken to determine the quantity of ^{235}U present. The exterior of the bag is monitored for contamination and the package is properly marked. The filter elements are sent to a licensed CVRF for processing and then shipped to a licensed low-level radioactive waste disposal facility.

The filter elements used in these units are handled as described immediately above for the GEVS filter elements.

The filter elements are handled as industrial trash unless the ventilation unit is used in a Restricted Area. These filter elements are removed from the unit, wrapped in plastic, and taken to the SWCR to be sampled for uranium compounds. If they are found to be non-contaminated they are handled as industrial trash. If they are found to be contaminated they are handled as described above for the Gaseous Effluent Vent System filter elements.

Air filters from the Non-Contaminated HVAC Systems, Compressed Air System, and the Diesel Generators are handled as industrial waste.

3.5.13.2.2.6 Scrap Metal

Metallic wastes are generated during routine and abnormal maintenance operations. The metal can be either clean, can be contaminated with radioactive material, or can contain hazardous material. Radioactive contamination of metal is always in the form of surface contamination caused by uranium compounds adhering to the metal or caught in cracks and crevices. No process in this facility results in activation of any materials.

Clean scrap metal is collected in bins. This material is transported by contract carrier to a local scrap metal vendor for disposal. Items collected outside of Radiation Areas are disposed of as industrial scrap metal unless there is reason to suspect it contains hazardous material.

Scrap metal is monitored for contamination before it leaves the site. Any metal found to be contaminated is either decontaminated or disposed of as radioactive waste. When feasible, decontamination is the preferred method.

Decontamination is performed in the Decontamination Workshop. Decontamination of large items should not be required until the end of plant life. After decontamination, the item is inspected again for radioactive contamination and disposed of in accordance NRC approved method.

Items that are not suitable for decontamination are inspected to determine the quantity of uranium present, packaged, labeled, and shipped either to a licensed CVRF or a licensed radioactive waste disposal facility.

Metallic items containing hazardous materials, as defined in 40 CFR Part 261 (CFR, 2003e), are collected at the source of the hazardous material. The items are wrapped to contain the material and taken to the SWCR. The items are then cleaned onsite if practical. If onsite cleaning cannot be performed, the items are sent to a licensed hazardous waste processing facility for offsite treatment and disposal.

3.5.13.2.2.7 Laboratory Waste

Small quantities of dry solid hazardous wastes are generated in laboratory activities, including small amounts of unused chemicals and materials with residual hazardous compounds. These materials are collected, sampled, and stored in the SWCR. Precautions are taken when collecting, packaging, and storing to prevent accidental reactions. These materials are shipped to a hazardous waste processing facility where the wastes are prepared for disposal.

Some of the hazardous laboratory material is radioactively contaminated, and is collected, labeled, stored, and recorded as mixed waste. This material is shipped to a licensed facility qualified to process mixed waste for ultimate disposal.

3.5.13.2.2.8 Evaporated/Dryer Concentrate

Potentially radioactive aqueous waste is evaporated in the Evaporator/Dryer to remove effectively all remaining uranium prior to release of the condensed vapor to the TEEB. The Evaporator/Dryer discharges dry concentrate directly into drums. These drums are checked for ^{235}U content, labeled, and stored in the SWCR. The concentrate is shipped to a licensed low-level radioactive waste disposal facility.

3.5.13.2.3 Operating Characteristics

Since the dry waste portion of the Solid Waste Disposal System is actually a series of steps performed manually, the system description in the above paragraphs also serves to provide the system operating characteristics.

All solid radioactive waste is Class A low-level waste as defined in 10 CFR 61 (CFR, 2003d).

3.5.13.2.4 Safety Considerations

Failure of this system will not endanger the health and safety of the public. Nevertheless, design and operating features enhance public and worker safety. Protection from hazardous, radioactive, and mixed material is provided by containment of materials, by strict administrative procedural controls, and by systematic inspections of waste materials. Onsite spills, if they occur, remain contained within Restricted Areas. Shipment of wastes offsite strictly adheres to regulations for packaging and transportation. The mass limit of fissile material prepared for offsite shipment shall not exceed the fissile material limits of 10 CFR 71 (CFR, 2003f). Appropriate protective clothing and respiratory equipment is required for plant workers depending on the material being handled. Controls on shape, mass, area density, and selection of waste containers prevent criticality events.

There are no IROFS associated with this portion of the Solid Waste Collection System. For a complete listing of IROFS, see Section 3.8, IROFS.

3.5.14 Decontamination Workshop

The Decontamination Workshop is located in the Technical Services Building. The layout is shown in Figure 3.5-38, Decontamination Workshop Equipment Arrangement. The

decontamination systems in this workshop are designed to remove radiation from contaminated materials and equipment used in uranium hexafluoride systems, waste handling systems, and miscellaneous other areas of the plant. Space is provided to break down and strip contaminated equipment prior to decontamination. The workshop is also used for the temporary storage and dismantling of failed equipment.

The only significant forms of radioactive contamination found in the facility are uranium hexafluoride (UF_6), uranium tetrafluoride (UF_4), and uranyl fluoride (UO_2F_2).

3.5.14.1 System Description

The Decontamination System has three basic subsystems:

- Equipment decontamination
- Sample bottle and valve decontamination
- Flexible hose decontamination

Equipment decontamination takes place in the Equipment Decontamination Cabinet and includes larger equipment items such as pumps and trap bodies. Sample bottles, valves, and flexible hoses are decontaminated in separate cabinets because of the difficulty of handling the specific shapes. Sample bottles and valves are decontaminated in the Sample Bottle Decontamination Cabinet and flexible hoses are decontaminated in the Flexible Hose Decontamination Cabinet.

3.5.14.1.1 Equipment Preparation for Decontamination

Equipment and components are stored in critically-safe arrays upon delivery to the Decontamination Workshop. These items are then degassed and drained before being broken down and stripped. Once equipment and components are stripped, they are ready to be decontaminated.

3.5.14.1.2 Equipment Decontamination

Stripped equipment and components are put into baskets when they are ready to be decontaminated in the Equipment Decontamination Cabinet (Figure 3.5-39, Process Flow Diagram, Equipment Decontamination System). The baskets are submerged in multiple heated baths, including a degreasing water bath, a citric acid bath, and two rinse water baths to decontaminate items. After the items are dry, they go to the Vacuum Pump Rebuild Workshop for reassembly. Typical equipment items are vacuum pumps and pump components, but may include valves, piping, instruments, tools, and scrap metal.

3.5.14.1.3 Sample Bottle Decontamination

Sample bottles and valves are decontaminated in the Sample Bottle Decontamination Cabinet (Figure 3.5-40, Process Flow Diagram, Decontamination System for Sample Bottles). Valves are linked together and citric acid is pumped through them, followed by DI water. Sample bottles are individually rinsed with citric acid to decontaminate them, followed by a DI water rinse. The bottles are initially dried using heated, compressed air before being placed into an oven to insure total dryness. The sample bottles are returned to the laboratories in the TSB where they are used for analysis.

3.5.14.1.4 Decontamination of Flexible Hoses

In the Flexible Hose Decontamination Cabinet (Figure 3.5-41, Process Flow Diagram, Decontamination System for Flexible Hoses), flexible hoses are decontaminated by pumping a citric acid solution through them. DI water is then pumped through the hoses before they are dried using heated, compressed air. The dried hoses are moved into the Vacuum Pump Rebuild Workshop for reuse in the plant.

3.5.14.2 Major Components

The major components associated with breaking down and decontaminating the equipment included in this system are:

A. Tools for moving equipment (e.g., cranes)

B. Tools for stripping equipment.

C. Radiation monitors.

D. Equipment Decontamination Cabinet

   1. Degreaser Tank with: an electric heater, ultrasonic agitator, recirculation pump, associated pipework and valves, instruments and controls, and water spray system.

   2. Citric Acid Tank with: an electric heater, ultrasonic agitator, recirculation pump, associated pipework and valves, instruments and controls, and water spray system.

   3. Two Rinse Water Tanks each with: an electric heater, ultrasonic agitator, recirculation pump, transfer pump, associated pipe work and valves, instruments and control.

   4. Monorail hoist.

   5. Citric Acid Tank and Degreaser Tank clean-up ancillary items, each with: portable transfer pump and associated equipment.

E. Exhaust system with ductwork connected to the Gaseous Effluent Vent System (GEVS), where required, and general HVAC system for the room.

F. Sample Bottle Decontamination Cabinet - a small citric acid tank (for a fresh solution); a small DI water tank; a pump and associated equipment; a small citric acid tank (for fresh

and waste solutions) for washing the valves; and 5-L (1.3 gal) containers for citric acid/uranic waste.

G. Flexible Hose Decontamination Cabinet - a small citric acid tank (for fresh and waste citric acid), a small DI water tank, and two pumps and associated equipment.

3.5.14.3 Interfaces

The Decontamination Workshop interfaces with the following other plant systems and areas:

A. Gaseous Effluent Vent System (GEVS). This system in the TSB pulls a vacuum to capture contaminated or hazardous vapors locally from the decontamination cabinets, the stripping tables, and the Outgas Area.

B. Fomblin Oil Recovery System. This system receives the contaminated oil drained from the pumps.

C. Potable Water System. This system provides the water for the hand wash sinks in the People Air Lock.

D. Compressed Air System. Compressed air is used in the decontamination process for drying sample bottles and flexible hoses. This system may also supply pneumatics to some tools in the workshop.

E. Electrical System. This system provides power to most equipment in the workshop.

F. Liquid Effluent Collection and Treatment System. This system collects, treats, and disposes of the liquid waste coming from the Decontamination Workshop.

G. Solid Waste Collection System. This collects and handles solid wastes, such as cloths, rags, and sludges, and ensures that it is disposed of off-site appropriately.

H. Deionized Water Supply and Distribution System. This provides water to the decontamination system for rinsing the citric acid and solid contaminants.

I. Chemical Laboratory. Samples from the decontamination tanks and systems are taken here to check for uranic content.

J. Heating, Ventilation and Air Conditioning (HVAC) System. This system provides general services to the Decontamination Workshop

3.5.14.4 Operating Characteristics

Decontamination in the Decontamination Workshop begins with the receipt and preparation of contaminated equipment and components. The process consists of a series of steps to dismantle, clean, and rinse the contaminated items individually. Sample bottles, valves, pumps, and equipment that fail or are taken out of the enrichment facility for maintenance are part of the input stream for the workshop. The typical items and quantities expected to be processed in the Decontamination Workshop on an annual basis are listed in Table 3.5-11, Items Processed in the Decontamination Workshop.

3.5.14.4.1 Equipment Preparation for Decontamination

Equipment to be decontaminated must be taken from the facility and prepared for decontamination. Equipment is taken offline prior to removal from the facility. It is then transported to the workshop and stored before being dismantled.

Most of the equipment that is decontaminated are process vacuum pumps. Pumps are taken offline, and the flanges are sealed in the facility prior to movement to the Decontamination Workshop. Pumps enter the Decontamination Workshop through airlock doors. The internal and external doors are electrically interlocked such that only one door can be opened at a time. Pumps may enter the workshop individually or in pairs on pump frames. Valves, piping, flexible hoses, and general plant components are accepted into the room either in plastic bags or with the ends sealed.

Pumps waiting to be processed are stored in the pump storage array (Storage Area on Figure 3.5-38, Decontamination Workshop, Equipment Arrangement) to eliminate the possibility of accidental criticality. Each row of the array has a 300 mm (11.8 in) spacing between containers. The distance between rows is 600 mm (23.6 in). Pumps are not accepted if there are no vacancies in the array.

Before being broken down and stripped, all pumps are placed in the Outgas Area (shown on Figure 3.5-38), and the local ventilation hose is positioned close to the pump flange. The flange covers are then removed from the pumps. HF and UF_6 fumes from pumps are exhausted via the vent hose, typically over a period of several hours. While in the Outgas Area, Fomblin oil is drained from the pump, and if required, the first stage pumps are separated from the second stage pumps. The oil is drained into 5-L (1.3 gal) plastic containers that are labeled so each can be tracked through the process. Miscellaneous equipment is placed in bins and taken to the Outgas Area as necessary.

Prior to removal from the Outgas Area, the outside of equipment bins, pump frames, and oil containers are monitored for radiological contamination. The various items are then taken to the decontamination system or to the Fomblin oil storage array as appropriate.

Oil waiting to be processed is stored in the Fomblin oil storage array to eliminate the possibility of accidental criticality. When ready for processing, the oil is transferred to the Fomblin Oil Recovery System where the uranics and hydrocarbon contaminants are separated from the oil prior to its reuse.

After outgassing, individual pumps are removed from the Outgas Area and placed on either of the two hydraulic stripping tables using an overhead crane. The tables can be height-adjusted, and a pump can be moved and positioned on the table. The pump and motor are stripped to component level using various hydraulic and hand tools. Using the overhead crane or mobile jig truck, the components are placed in bins ready for transportation to the Equipment Decontamination Cabinet.

3.5.14.4.2 Equipment Decontamination

Decontamination for pumps and general equipment is done in a series of steps. The equipment is put into a degreaser water bath, a citric acid bath, and is then rinsed with DI water baths. It is transported between baths in a basket using an integral monorail hoist inside the Equipment Decontamination Cabinet (Figure 3.5-39, Process Flow Diagram, Equipment Decontamination

System). The decontamination process for most plant components is described below, with a typical cycle time of approximately one hour.

Degreasing takes place in the Degreaser Tank in the Equipment Decontamination Cabinet. Components requiring degreasing are cleaned manually and then immersed into the Degreaser Tank. An open top tank with a sloped bottom is used for removing the residual Fomblin oil and greases that may inhibit the decontamination process. The sloped bottom construction is provided for draining the tank completely. During the degreasing process, a pump continuously recirculates the tank contents to accommodate sampling for criticality prevention. The tank has a capacity of 800 L (211 gal), and level control with a local alarm is provided to maintain the liquid level. It is furnished with an ultrasonic agitation facility, and a thermostatically controlled electric heater to maintain the temperature at 60°C (140°F). The tank has a ring header and a manual hose to rinse out residual solids/sludge with DI water after the batch has been pumped to the Liquid Effluent Collection and Treatment System. The degreased components are inspected and then transferred to the Citric Acid Tank for the decontamination part of the process.

Decontamination is accomplished by immersing the contaminated component in a citric acid bath. The Citric Acid Tank and pump system have the same components and are operated and controlled in the same fashion as the Degreaser Tank and pump system. In order to minimize uranium concentration, the rinse water from the final Rinse Water Tank is pumped into the other Rinse Water Tank (closer to the Citric Acid Tank), which in turn is pumped into the Citric Acid Tank. This counter-current system eliminates a waste product stream by concentrating the uranics in the Citric Acid Tank. The rinse water transfer pump is linked with a high level alarm on the Citric Acid Tank to prevent overfilling. After approximately 15 minutes, the component is removed from the Citric Acid Tank to be rinsed.

Two open top Rinse Water Tanks with sloped bottoms are provided to rinse excess citric acid from decontaminated components. Each of the tanks has a liquid capacity of 800 L (211 gal). Both of these tanks are furnished with ultrasonic agitation, a thermostatically controlled electric heater to maintain the content's temperature at 60°C (140°F), and a recirculation pump facility to accommodate sampling for criticality prevention. The sloped bottom is provided for draining the tank completely. Fresh DI water is manually added to the final rinse tank as needed. The water from this tank is pumped into the other Rinse Water Tank (closer to the Citric Acid Tank) to minimize uranium concentration. Level control is provided to maintain the rinse water level. A manual spray hose is available for rinsing each tank after it has been emptied.

All components are dried after decontamination. This is performed manually using compressed air inside the cabinet while the components are still in the basket.

Each of the tanks is sampled periodically to determine the condition of the solution and any sludge present. The Citric Acid Tank and Degreaser Tank contents are analyzed for uranium concentration and citric acid concentration. The results of the analysis are compared to administrative limits set for the uranic content and for the pH of the solutions. Spent solutions, consisting of citric acid, degreasing water, and various uranyl and metallic citrates, are transferred to collection tanks in the Liquid Effluent Collection and Treatment System. After monitoring, the Degreaser Tank waste contents are pumped into the Degreaser Water Collection Tank and the Citric Acid Tank waste solution is pumped into the Spent Citric Acid Collection Tank. The solids contents from both tanks are sprayed with fresh DI water and the resultant mixtures are also pumped to their respective destinations. The Rinse Water Tanks are checked for satisfactory pH and uranic levels; unusable water is transferred to an effluent

collection tank in the Liquid Effluent Collection and Treatment System. The quantity of contamination remaining is "as low as reasonably achievable." Components released for unrestricted use do not have contamination exceeding administrative limits. However, if all of a component's surface contamination cannot be monitored or if the contamination exceeds administrative limits, then the component is disposed of as low-level waste. All materials of construction are compatible with the process solutions at operating conditions.

The activities carried out in the Decontamination Workshop give rise to a potentially contaminated gaseous stream, which requires treatment before discharging to the atmosphere. These streams consist of air with traces of UF_6, HF, and uranium particulates (mainly UO_2F_2). Air exhausted from the Equipment Decontamination Cabinet, the Sample Bottle Decontamination Cabinet, and the Flexible Hose Decontamination Cabinet is vented to the TSB GEVS to ensure airborne contamination is controlled. There are local ventilation ports in the stripping area and Outgas Area that operate under vacuum with all air discharging through the TSB GEVS. The TSB GEVS is designed to route these streams to a filter system and to monitor, on a continuous basis, with the resultant exhaust stream discharged to the atmosphere. The room itself has HVAC ventilation.

3.5.14.4.3 Sample Bottle Decontamination

The Decontamination Workshop has a separate area dedicated to sample bottle storage, disassembly, and decontamination, called the Sample Bottle Decontamination Cabinet (Figure 3.5-40, Process Flow Diagram, Decontamination System for Sample Bottles). Valves are also decontaminated in this cabinet. The decontamination system for valves and sample bottles requires a citric acid rinse and a DI water rinse for both items.

Used sample bottles are weighed to confirm the bottles are empty upon entry into the workshop. The sample bottle valves are loosened outside the cabinet and then are removed once inside the cabinet. A small open container is filled with a citric acid solution. The sample bottles are filled with a clean citric acid solution from this container. Any loose material inside the bottle is dissolved in the solution, which is then poured into a waste container. The sample bottles are then filled with DI water and left to stand for approximately an hour.

The removed valves are linked together in series before being placed downstream of a pump. The pump is fed from a small open container filled with citric acid solution. Citric acid is then recirculated in a closed loop through the valves for an hour. The valves are rinsed after the decontamination step using fresh DI water.

After the bottles and valves have a second DI water rinsing, they are dried manually using heated compressed air and inspected for contamination and rust.

The resulting waste solutions from cleaning the bottles and the valves are collected in 5-L citric acid/uranic waste containers. The solutions are then manually transferred to the Citric Acid Tank in the Equipment Decontamination Cabinet. Any liquid spillages / drips are soaked away with paper tissues that are disposed of in the Solid Waste Collection System.

During the process, air from the cabinet vents to the GEVS to ensure that airborne contamination is controlled. The bottles are then put into an electric oven to ensure total dryness, and on removal are ready for reuse. The cleaned components are transferred to a clean workshop for reassembly followed by pressure and vacuum testing.

3.5.14.4.4 Flexible Hose Decontamination

The decontamination of flexible hoses is performed in a Flexible Hose Decontamination Cabinet (Figure 3.5-41, Process Flow Diagram, Decontamination System for Flexible Hoses). This decontamination cabinet is designed to process only one flexible hose at a time and consists of recirculation loops of citric acid solution and of DI water.

The flexible hose is attached in a closed loop downstream of a closed citric acid tank and a recirculation pump. The flexible hose is flushed with a heated citric acid solution. After the citric acid wash, the hose is attached in a closed loop downstream of a closed DI water tank and a pump. It is then rinsed with heated DI water in a recirculation system. Each flexible hose is then dried in the cabinet using heated compressed air. The cleaned, dry flexible hose is then transferred to the Vacuum Pump Rebuild Workshop for reassembly and pressure testing prior to reuse in the plant.

Interlocks are provided in both recirculation loops such that the recirculation pumps cannot be started if the flexible hose has not been connected correctly at both ends. The cabinet doors are also on an interlock system to ensure that the pump does not start with the doors open. The tanks each have a temperature transmitter, a level transmitter with high and low alarms, and controls on the electric heating element. Both the citric acid and DI water recirculation pumps are equipped with 15-min timer devices. The two tanks are maintained at 60°C (140°F) when in operation.

The used solutions (citric acid and DI water) are transferred into the Citric Acid Tank in the Equipment Decontamination Cabinet for disposal. The exhaust air goes to the GEVS to ensure airborne contamination is controlled. Spillages from the drip tray are routed to either the citric acid tank or the hot water recirculation tank in the cabinet depending upon the decontamination cycle.

3.5.14.5 Safety Considerations

Failure of this system does not endanger the health and safety of the public. Design and operating features enhance public and worker safety.

Criticality is precluded through the control of geometry, mass, and the selection of appropriate storage containers. Administrative measures are applied to uranium concentrations in the Citric Acid Tank, Degreaser Tank, and Rinse Water Tanks in the Equipment Decontamination Cabinet to maintain these controls. To minimize worker exposure, airborne radiological contamination resulting from dismantling is vented to the GEVS. Air suits and portable ventilation units are available for further worker protection.

Containment of chemicals and wastes is provided by equipment and piping components, designated containers, and air filtration systems. All pipe work and vessels in the Decontamination Workshop are provided with design measures to protect against spillage or leakage. Hazardous wastes and materials are contained in tanks and other appropriate containers, and are strictly controlled by administrative procedures. Chemical reaction accidents are prevented by strict control on chemical handling procedures and physical segregation of chemicals in storage locations.

Personnel entry into the facility will be via a sub-change facility. This area has the required boot barrier access, washing and monitoring facilities.

There are three items relied on for safety (IROFS) in the Decontamination Workshop. They are as follows:

A. IROFS25, Passive design of Citric Acid Tank in the Flexible Hose Decontamination System, i.e., shape/geometry, to maintain the specified requirements for criticality safety.

B. IROFS32, Use of passive engineered design of the flexible cleaning and washing loops, i.e., shape/geometry, to maintain the specified requirements for criticality safety.

C. IROFS33, Use of passive engineered design of the sample bottle cleaning and washing loops, i.e., shape/geometry, to maintain the specified requirements for criticality safety.

For a complete listing of IROFS, see Section 3.8, IROFS.

3.5.15 Fomblin Oil Recovery System

Fomblin oil is a highly fluorinated, inert oil selected especially for use in uranium hexafluoride (UF_6) systems to avoid reaction with UF_6. The Fomblin Oil Recovery Unit recovers used Fomblin oil from pumps used in UF_6 process systems. Used Fomblin oil is recovered by removing impurities that inhibit the oil's lubrication properties. The impurities collected are primarily uranyl fluoride (UO_2F_2) and uranium tetrafluoride (UF_4) particles. The recovery process also removes trace amounts of hydrocarbons, which if left in would react with UF_6. Flow through the Fomblin Oil Recovery System, located in the Decontamination Workshop is shown in Figure 3.5-42, Process Flow Diagram, Fomblin Oil Recovery System.

The process employed is essentially a laboratory scale unit that has been developed to a production level. Fomblin oil recovery is carried out as a batch operation using the fully enclosed, self-contained Fomblin Oil Recovery Unit. The unit has a uranium removal section followed by a hydrocarbon removal section. Dimensions of the recovery unit are approximately 3 m (9.84 ft) long by 1 m (3.28 ft) wide by 2.2 m (7.22 ft) high.

3.5.15.1 System Description

The Fomblin oil recovery process consists of oil collection, uranium precipitation, trace hydrocarbon removal, oil sampling, and storage of cleaned oil for re-use. Each step is performed manually.

Fomblin oil is collected in the Decontamination Workshop as part of the pump disassembly process. The oil is transferred for processing to the Fomblin Oil Recovery Unit in criticality safe, 5 L (1.32 gal), plastic containers. The containers are labeled so each can be tracked through the process. The used oil awaiting processing is stored in the Fomblin oil receipt storage array to eliminate the possibility of accidental criticality. Each row of the array has 300 mm (0.984 ft) spacing between containers (edge to edge). The distance between rows is 600 mm (1.97 ft) (edge to edge). Containers are not accepted if there are no vacancies in the array.

Uranium compounds are removed from the Fomblin oil in the Fomblin Oil Recovery Unit to minimize personnel exposure to airborne contamination. Dissolved uranium compounds are removed by the addition of anhydrous sodium carbonate (Na_2CO_3) to the oil container which causes the uranium compounds to precipitate into sodium uranyl carbonate ($Na_4UO_2(CO_3)_3$). The mixture is agitated and then filtered through a coarse screen to remove metal particles and small parts such as screws and nuts. This waste is transferred to the Solid Waste Collection

System. The oil is then heated to 90 °C (194 °F) and stirred for 90 minutes to speed the reaction. The oil is centrifuged to remove UF_4, sodium uranyl carbonate, and various metallic fluorides. The particulate that is removed from the oil is collected and transferred to the Solid Waste Collection System for subsequent offsite disposal.

After uranium compounds are removed, trace amounts of hydrocarbons are removed in the Fomblin Oil Recovery Unit by adding activated carbon to the Fomblin oil and heating the mixture to 100°C (212°F) for two hours. The activated carbon adsorbs the hydrocarbons, and the carbon in turn is removed by filtration through a bed of celite. The resulting sludge is transferred to the Solid Waste Collection System for disposal.

Recovered Fomblin oil is sampled, and the samples are dissolved and analyzed in the Chemical Laboratory to determine if the criteria for purity have been met. Oil that meets the criteria can be re-used in the UF_6 system while oil that does not meet the criteria is reprocessed. The following limits have been set for recovered Fomblin oil purity for re-use in the plant:

- Uranium - 50 ppm by volume.
- Hydrocarbons - 3 ppm by volume.

Recovered Fomblin oil is stored in 5 L (1.32 gal), plastic containers in the chemical storage area. No precautions are required to prevent criticality accidents during the handling and storage of clean Fomblin oil.

3.5.15.2 Major Components

The following major components are included in this system:

A. Fomblin Oil Recovery Unit. One Fomblin Oil Recovery Unit is provided to control the release of airborne radioactive contamination or HF during oil processing. Discharge air is filtered and is discharged from the plant via the Gaseous Effluent Ventilation System.

B. Fomblin Oil Centrifuge. One Fomblin oil centrifuge is provided within the recovery unit to remove particulate from the oil. The centrifuge capacity is approximately 60 L/hr (15 gph).

3.5.15.3 Interfaces

The Fomblin Oil Recovery System interfaces with the following plant systems and areas:

A. Gaseous Effluent Vent System. Exhaust from the fume hood of the Fomblin Oil Recovery Unit is filtered and discharged from the plant via the TSB Gaseous Effluent Vent System.

B. Solid Waste Collection System. The Solid Waste Collection System will receive uranic precipitate and filter cake resulting from the uranium and hydrocarbon removal processes, and solvent resulting from rinse-out of filters, tubing, and clean oil containers.

C. Decontamination Workshop. Fomblin oil collected in the pump disassembly areas of the Decontamination Workshop is transferred to the Fomblin Oil Recovery System – also in the Decontamination Workshop - for processing. The Fomblin oil centrifuge bowls and

parts are transferred for decontamination in the Decontamination System - also in the Decontamination Workshop.

D. Vacuum Pump Rebuild Workshop. Cleaned Fomblin oil is transferred to the Vacuum Pump Rebuild Workshop to await reuse in rebuilt pumps.

3.5.15.4 Operating Characteristics

The total annual volume of oil processed in this system is approximately 530 L (140 gal). The above system description serves to describe operating characteristics as well since oil recovery is simply a series of manual steps.

3.5.15.5 Safety Considerations

Failure of this system will not endanger the health and safety of the public. Nevertheless, design and operating features are included which contribute to the safety of plant workers. Containment of chemicals and wastes is provided by components, designated containers, and air filtration systems. Criticality associated with Fomblin oil recovery is precluded through the control of shape, mass, and the selection of appropriate storage containers. Chemical reaction accidents are prevented by strict control on chemical handling procedures and physical segregation of chemicals in storage locations. Fomblin oil is rated as non-combustible and is thermally stable up to 300°C (571°F). Strict control of oil temperatures during heating precludes threat of fire. To minimize worker exposure, the Fomblin Oil Recovery System fume hood extracts all airborne radiological contamination resulting from oil recovery. Where necessary, air suits and portable ventilation units are available for further worker protection.

There are no IROFS associated with the Fomblin Oil Recovery System. For a complete listing of IROFS, see Section 3.8, IROFS.

3.5.16 Laundry System

The Laundry System cleans contaminated and soiled clothing and other articles which have been used throughout the plant. It contains the resulting solid and liquid wastes for transfer to appropriate treatment and disposal facilities. The Laundry System receives the clothing and articles from the plant in plastic bin bags, taken from containers strategically positioned within the plant. Clean clothing and articles are delivered to storage areas located within the plant. The Laundry System components are located in the Laundry Room of the TSB.

3.5.16.1 System Description

The Laundry System collects, sorts, cleans, dries, and inspects clothing and articles used throughout the plant in Radiation Areas (RAs). The laundry system does not handle any articles from non-RAs. Laundry collection is divided into two main groups- articles with a low probability of contamination and articles with a high probability of contamination. Those articles unlikely to have been contaminated are further sorted into lightly soiled and heavily soiled groups. The sorting is done on a table underneath a vent hood that is connected to the GEVS in the TSB. All lightly soiled articles are cleaned in the laundry. Heavily soiled articles are inspected and any considered to be difficult to clean (i.e., those with significant amounts of grease or oil on

them) are transferred to the Solid Waste Collection System without cleaning. Special containers and procedures are used for collection, storage, and transfer of these items as described in the Solid Waste Collection System section. Articles from one plant department are not cleaned with articles from another plant department.

Special water-absorbent bags are used to collect the articles that are more likely to be contaminated. These articles may include pressure suits and items worn when, for example, it is required to disconnect or "open up" an existing plant system. These articles that are more likely to be contaminated are cleaned separately. Expected contaminants on the laundry include slight amounts of uranyl fluoride (UO_2F_2) and uranium tetrafluoride (UF_4).

When sorting is completed, the articles are placed into the front-loading washing machine in batches. The cleaning process uses 80°C (176°F) minimum water, detergents, and non-chlorine bleach for dirt and odor removal, and disinfection of the laundry. Detergents and non-chlorine bleach are added by vendor-supplied automatic dispensing systems. No "dry cleaning" solvents are used. Wastewater from the washing machine is discharged to one of three Laundry Effluent Monitor Tanks in the Liquid Effluent Collection and Treatment System. The laundry effluent is then sampled, analyzed, and transferred to the TEEB for disposal (if uncontaminated) or to the Precipitation Treatment Tank for treatment as necessary.

When the washing cycle is complete, the wet laundry is placed in a front-loading, electrically heated dryer. The dryer has variable temperature settings, and the hot wet air is exhausted to the atmosphere through a lint drawer that is built into the dryer. The lint from the drawer is then sent to the Solid Waste Collection System as combustible waste.

Dry laundry is removed from the dryer and placed on the laundry inspection table for inspection and folding. Folded laundry is returned to storage areas in the plant.

3.5.16.2 Major Components

The following major components are included in this system:

A. Washers. Two industrial quality washing machines are provided to clean contaminated and soiled laundry. One machine is operating, and one is a spare for standby. Each machine has an equal capacity that is capable of washing the daily batches.

B. Dryers. Two industrial quality dryers are provided to dry the laundry cleaned in the washing machine. One dryer is operating, and one is a spare for standby. Each machine has an equal capacity that is capable of drying the daily batches. The dryer has a lint drawer that filters out the majority of the lint.

C. Air Hood. One exhaust hood mounted over the sorting table and connected to the TSB GEVS. The hood is to draw potentially contaminated air away as laundry is sorted prior to washing.

D. Sorting Table. One table to sort laundry prior to washing.

E. Laundry Inspection Table. One table to inspect laundry for excessive wear after washing and drying.

3.5.16.3 Interfaces

The Laundry System interfaces with the following other plant systems:

A. Liquid Effluent Collection and Treatment System. The wastewater generated during the laundry process is pumped to one of three Laundry Effluent Monitor Tanks.

B. Solid Waste Collection System. The Solid Waste Collection System receives clothing that has been laundered but is not acceptable for further use. It also receives clothing rejected from the laundry system due to excess quantities of oil or hazardous liquids. It also receives lint from the Laundry Dryer.

C. TSB Gaseous Effluent Vent System. Air from the sorting hood is sent to the TSB Gaseous Effluent Vent System.

D. Process Water System. The Process Water System supplies hot and cold water to the washer.

E. Compressed Air System. Compressed air is supplied as required to support options selected for the laundry washers and dryers.

F. Electrical System. The washing machines and dryers consume power.

3.5.16.4 Operating Characteristics

Clothing processed by this system normally includes overalls, lab coats, shirts, towels and miscellaneous items. Approximately 113 kg (249 lb) of clothing is washed each day. Upon completion of a cycle, the washer discharges to one of three Laundry Effluent Monitor Tanks in the Liquid Effluent Collection and Treatment System.

The washed laundry is dried in the hot air dryers. The exhaust air passes through a lint drawer to the atmosphere. Upon completion of a drying cycle, the dried laundry is inspected for excessive wear. Usable laundry is folded and returned to storage for reuse. Unusable laundry is handled as solid waste as described in the Solid Waste Collection System section.

3.5.16.5 Safety Considerations

Failure of this system does not endanger the health and safety of the plant workers, the public, or the environment. Additional design and operating features have been included, though, which contribute to the safety of plant workers. Some of the features are specialized to laundry systems and some of them are inherent in plant design.

Piping, piping components, and a laundry room sump provide containment of any liquid radiological waste. Small leaks and spills from the washer are collected and sent to the Liquid Effluent Collection and Treatment System. A rarely occurring large leak is to be captured in the laundry room sump. Any effluent captured in the sump is transferred to the Liquid Effluent Collection and Treatment System by a portable pump.

Contaminants from the washers are rinsed to the Liquid Effluent Collection and Treatment System. The exhaust air blows to atmosphere because there is little chance of any contaminant being in it.

The washer and dryer are equipped with electronic controls to monitor the operation. The dryer has a fire protection system that initiates an isolated sprinkler inside the dryer basket if a fire is detected in the dryer.

There are no IROFS associated with the Laundry System. For a complete listing of IROFS, see Section 3.8, IROFS.

3.5.17 Ventilated Room

The function of the Ventilated Room is to provide a facility for the maintenance of chemical traps and UF_6 cylinders. The facility also deals with faults associated with cylinders and cylinder valves.

This includes safe emptying of chemicals from chemical traps and replacement of faulty valves on full UF_6 cylinders. The Ventilated Room is used for temporary storage of full and empty chemical traps and of the contaminated chemicals used in the chemical traps. The Ventilated Room is in physical proximity to the Decontamination Workshop through which the emptied chemical traps and other components are processed. Full maintenance records are kept for all chemical traps and UF_6 cylinders passing through the Ventilated Room.

3.5.17.1 System Description

The main activities carried out in the Ventilated Room are servicing chemical traps by removing spent carbon, aluminum oxide and sodium fluoride from the chemical traps and replacing damaged and leaking valves on cylinders which contain UF_6.

Personnel can enter the Ventilated Room from two places. One is through an airlock off the corridor of the Technical Services Building. The other is through a roll-up door entering from the Cylinder Preparation Room. See Figure 3.3-7, Technical Services Building, First Floor, for the location and arrangement of the Ventilated Room. The entry through the corridor in the Technical Service Building is equipped with a change area and appropriate scanning equipment to monitor for contamination.

The Ventilated Room is maintained at a negative pressure relative to the surrounding areas. The negative pressure is to help mitigate any releases of hazardous materials to areas outside of the room. All room air discharges through the TSB GEVS. The activities carried out in the Ventilated Room may result in potentially contaminated gaseous effluents that require treatment before being discharged to the atmosphere. These effluents are UF_6, Hydrogen Fluoride, and Uranyl Fluoride.

The most frequent activity in the Ventilated Room is the servicing of chemical traps. After the chemical traps enter the Ventilated Room, they are stored in safe array storage racks. To remove the spent chemicals, a specially designed rig is used. The chemical trap is placed into the rig, and the rig inverts the chemical trap to dump the chemicals. The rig has a connection to the TSB GEVS to dispose of any airborne contaminates. Removed spent chemicals are placed in containers and sampled for uranium content. After sampling the spent chemicals are transferred to the Solid Waste Collection System. The empty chemical traps are then transported to the Decontamination Workshop and then refilled for future use.

In addition to servicing the chemical traps, UF_6 cylinders with faulty valves are serviced. The cylinders are transported into the Ventilated Room through the adjoining Cylinder Preparation Room via a rail transporter. Once in the room, the faulty valve is removed and the threaded connection in the cylinder is inspected. A new valve is then installed in accordance with the requirements of ANSI N-14.1 (ANSI, 2001). After the valve is installed, the cylinder will undergo a pressure test with gaseous nitrogen to 1.345 bar absolute (19.5 psia). The Cylinder Pressure test and Pump-Out System is shown in Figure 3.5-43, Piping & Instrumentation Diagram, Cylinder Pressure Test & Pump Out. The valve and its connection into the cylinder are tested for leakage. If no leakage is detected, the cylinder is pumped down to 250 mbar (absolute) (100 in. H_2O) and returned to service. Damaged, contaminated valves are decontaminated and transported to the Solid Waste Collection System.

3.5.17.2 Major Components

The major components of the Ventilated Room and systems within the Ventilated Room are:

A. Powered roll-up door for cylinder entry through the Cylinder Preparation Room

B. Personnel air-lock for access from the Technical Services Building corridor

C. Chemical Trap Emptying Rig

D. Cylinder Pressure Test & Pump Out Rig

E. Transporter rails

F. Slings and shackles for use with the lifting devices and a suitable storage facility

G. Storage areas for contaminated traps; contaminated, dismantled, component bins and contaminated combustible waste

H. Various stripping and dismantling tools, vacuum cleaner, and storage facilities.

3.5.17.3 Interfaces

The Ventilated Room interfaces with the following systems and utilities.

A. Technical Services Building-GEVS

B. Decontamination Workshop

C. Solid Waste Collection System

D. Nitrogen System

E. Compressed Air System

F. Electrical System.

3.5.17.4 Safety Considerations

Numerous design and operating features are incorporated into the Ventilated Room and the systems within it to provide safe operation and protect the plant operators and the public.

Emptying the chemical traps will generate airborne particulates. Airborne particulates are greatly minimized by emptying the chemical traps in a specially designed rig. The rig is designed to prevent the airborne particulates from escaping from the rig and into the Ventilated Room. The rig is connected to the TSB GEVS. In addition to controlling airborne contaminates, the rig is designed to meet criticality control requirements and is safe by geometry.

For extra protection, plant operators are required to wear respirators when they are around open chemical traps. There are numerous control measures in the Ventilated Room to prevent criticality accidents. Among these are safe storage arrays, moderation control, sampling and mass control.

The IROFS associated with the Ventilated Room are listed below, with the exception of IROFS 31 which is described in Section 5.6, Criticality Items Relied On For Safety.

A. Automatic trip of the vacuum pump on high weight of the carbon trap for the Ventilated Room evacuation skid. This single train feature functions to prevent UF_6 release or criticality in the TSB GEVS. (IROFS 3)

B. Automatic trip of the vacuum pump on high temperature in the Ventilated Room evacuation skid carbon trap. This single train feature functions to prevent criticality in the TSB GEVS. (IROFS 22)

C. Administrative control to require employment of respiratory protection when 1) handling carbon or sodium fluoride trap material containing Special Nuclear Material (SNM), and 2) performing positive pressure testing of UF_6 cylinders after repair or replacement of a leaking cylinder component. (IROFS 23)

D. Administrative control to require operation of TSB Gaseous Effluent Vent System connection to the assembly used to remove airborne carbon fines during the handling of carbon trap material containing SNM. (IROFS 24)

E. Ventilated Room ventilation fire detection trip and limited building leakage. This hard wired single train, fail-safe, feature, in conjunction with limiting building leakage, functions to isolate the Ventilated Room HVAC to mitigate UF_6 release to the public. (IROFS 37)

3.5.18 Chemical Laboratory

The function of the Chemical Laboratory is to analyze solid and liquid samples taken from all areas of the plant. This includes, but is not limited to, the Separations Building, Blending & Liquid Sampling Area, TSB, and the CUB.

3.5.18.1 System Description

Samples enter the Chemical Laboratory from across the plant for analysis. The samples are categorized as follows.

A. UF_6 product samples

B. Waste water samples

C. Samples from the Decontamination Workshop

D. Oil samples from compressors

E. Samples from chemical absorbers

F. Miscellaneous samples.

3.5.18.2 Major Components

The major components of the Chemical Laboratory include the following.

A. Inductively-coupled Plasma Mass Spectrometer

B. Inductively-coupled Plasma Optical Emission Spectrometer

C. Analytical Laboratory Equipment (UV Spectrometer, pH meter, conductivity meter, titrators, water bath, analytical balances)

D. Fume Collection and Exhaust Hoods

E. Ultra Pure Water Equipment

F. Sub-sampling Unit.

The sub-sampling unit allows smaller samples of UF_6 to be dispensed from plant sample containers (1S or 2S bottles) into P-10 tubes that are then used for analysis or shipment to customers. The unit consists of three independently heated dispensing stations mounted on a common base. It is located inside a fume collection exhaust hood.

Each dispensing station is contained in its own electrically heated, insulated hot box. A fan circulates the air inside the hot box. Instrumentation controls the temperature of the hot box and shuts off the heating system on high temperature or loss of vacuum. Two stations are capable of handling 1S sample bottles, and the third station can handle either 1S or 2S sample bottles.

Each station has the necessary piping and valves to transfer a specific quantity of UF_6 into the smaller type P-10 sub-sample tube. The sub-sample tube is located outside the hot box and is cooled with liquid nitrogen in a Dewar flask.

A common manifold connects the sample piping in each station to vacuum pumps via UF_6 cold traps. Three vacuum pumps are mounted on the unit base. For initial system pump down and to remove moisture, a set of two pumps in series is used. For normal operation of the unit a single pump installed in parallel to the dual pump set is used. The vacuum pumps exhaust into the fume collection exhaust hood.

Dual UF_6 cold traps, connected in series, precede the vacuum pumps. The UF_6 cold traps are cooled using liquid nitrogen in Dewar flasks. UF_6 in the exhaust gas is desublimed in the UF_6 cold traps before being exhausted through the vacuum pump.

3.5.18.3 Interfaces

The Chemical Laboratory interfaces with the following systems and utilities.

A. Samples are received from throughout the plant

B. TSB Gaseous Effluent Vent System

C. TSB Laboratory HVAC System

D. Nitrogen System

E. Compressed Air System

F. Potable Water System

G. Deionized Water Supply and Distribution System

H. Electrical System

I. Liquid Effluent Collection and Treatment System

J. Solid Waste Collection System.

3.5.18.4 Safety Considerations

Failure of this system (laboratory accidents) will not endanger the health and safety of the public. Nevertheless, design and operating features are included that contribute to the safety of plant workers. Wastes are contained in designated containers and the air filtration systems. Criticality is precluded through the control of geometry and mass of fissile materials. To minimize worker exposure, airborne contamination resulting from laboratory operations is exhausted through the TSB GEVS.

IROFS associated with the Chemical Laboratory are listed below. For a complete listing of IROFS, see Section 3.8, IROFS.

A. UF_6 cold trap high temperature interlock to close valve in line to vacuum pumps. This hard-wired single train, fail-safe, feature functions to prevent flow of UF_6 to the TSB GEVS in the event the UF_6 cold traps are above an adequate desublimation temperature. (IROFS 20)

B. High temperature trip of UF_6 Sub Sampling Unit Hot Box Heaters. This automatic, fail-safe, feature functions to trip the hot box heaters at the UF_6 Sub Sampling Unit. (IROFS 43)

C. Administrative control to require operation of TSB Gaseous Effluent Vent System connected to the chemical hood when the UF_6 Sub Sampling Unit is operated. (IROFS 24)

3.5.19 Cylinder Preparation Room

The function of the Cylinder Preparation Room is to provide a facility to test and inspect new or cleaned 30B, 48X, or 48Y cylinders for use in the Separations Plant and the Blending and Liquid Sampling Area. Figure 3.3-7, Technical Services Building, shows the location of the Cylinder Preparation Room within the Technical Services Building.

The primary functions performed in the Cylinder Preparation Room include cylinder identification, external visual inspection, internal inspection, pressure testing, and helium leak testing.

Each test stand has a connection to the TSB GEVS, the Compressed Air System, and to the Cylinder Preparation vacuum pump as indicated in Figure 3.5-44, Process Flow Diagram, Cylinder Preparation, Vacuum Pump and Trap Set System, Sheets 1 and 2.

3.5.19.1 System Description

The Cylinder Preparation Room has four testing and inspection positions and is capable of preparing all the empty cylinders for the entire facility including cylinders used in the Blending and Liquid Sampling Area. Based on a one shift per day operation, the four testing positions are capable of handling more than 350 cylinders per year. The functions performed in the Cylinder Preparation Room are described below.

A. Cylinder Identification. Prior to any operation in the Cylinder Preparation Room, a series of administrative checks are performed to ensure that the proper cylinder will be tested.

B. External Visual Inspection. The external inspection includes an inspection of the following: valve orientation, the number of engaged threads on the valve, valve protector inspection, cylinder plug, the cylinder welds, the cylinder shell, stiffening rings and skirts and a wipe test for possible surface contamination.

C. Cylinder Pressure Check. Following the external visual inspection, the cylinder is connected to the test rig. The cylinder pressure is checked and if it is at atmospheric pressure, the cylinder is connected to the GEVS. If the cylinder is below atmospheric pressure, dry compressed air is used to pressurize the cylinder to 1050 mbar (15.2 psi). When 1050 mbar (15.2 psi) has been reached, a valve is opened to connect the cylinder to the GEVS.

D. Internal Inspection. With the cylinder connected to the GEVS, the cylinder valve spindle is removed and an endoscope is passed through the opening to check the inside for contaminants or rust.

E. Pressure Testing. After internal inspection, the cylinder is pressure tested to 7 barg (102 psig) with compressed air. Bubble testing of the valve packing and threaded connection is performed. After the valve packing and threaded connection are tested, the valve seat is leak tested. On satisfactory completion of the pressure test, the flexible pipe is reconnected and the cylinder is slowly evacuated to the GEVS.

F. Helium Leak Test. With the GEVS and compressed air valves closed, the cylinder is evacuated to 0.01 mbar (0.004 in. of H_2O) using the cylinder preparation vacuum pump and trap set. The vacuum pump valve is closed, and a pressure rise test is completed. If satisfactory, the cylinder is evacuated to 0.01 mbar (0.004 in. of H_2O) and a helium leak test of the cylinder is then performed. Helium is injected near any joint on the outside of the cylinder that could have a leak. If the leak detector does not pick up any helium, the cylinder passes the leak test. After satisfactory completion of the leak test, the cylinder is disconnected from the test stand and removed from the room.

3.5.19.2 Major Components

The major components of the Cylinder Preparation System are as follows:

A. Vacuum pump/chemical trap set (including a sliding vane vacuum pump, an activated carbon trap, and an aluminum oxide trap)

B. Instrumentation and control system

C. Cradles to support the cylinders at each test station

D. Helium Leak Detection System

E. Helium gas cylinders.

3.5.19.3 Interfaces

The Cylinder Preparation System interacts with the Gaseous Effluent Ventilation System serving the Technical Services Building, and the Compressed Air System.

3.5.19.4 Safety Considerations

Potential hazards of the Cylinder Preparation Room are high-pressure air, surface contamination on the cylinders, and cylinders containing UF_6.

Measures have been taken to make the facility as safe as possible. The potential hazard associated with high-pressure air is minimized by the system being designed, inspected, and tested to national standards. Surface contamination is prevented through the performance of a surface wipe test on each cylinder prior to inspection and testing. A gamma detection system at the preparation monitors the presence of ^{235}U and an alarm will sound when threshold values are exceeded.

A weight trip on the activated carbon trap will stop the vacuum pump and alarm. A temperature trip on the activated carbon trap will close all station vacuum and vent valves.

The IROFS associated with the Cylinder Preparation Room is described below. For a complete listing of IROFS see Section 3.8, IROFS.

- Cylinder Preparation Room Carbon Trap Weight Trip. The weight indicator system will automatically trip the vacuum pump on high weight of the carbon trap. This single train feature functions to prevent UF6 release or criticality in the TSB GEVS (IROFS 3).

3.5.20 References

ANSI, 2001. Uranium Hexafluoride - Packing for Transport, ANSI N14.1-2001, American National Standards Institute, February 1, 2001.

ASME, 2002. Process Piping, ASME 31.3-2002, Revision 2, American Society of Mechanical Engineers, 2002.

CFR, 2003a. Title 10, Code of Federal Regulations, Section 61.56, Waste Characteristics, 2003.

CFR, 2003b. Title 40, Code of Federal Regulations, Section 261.3, Definition of Hazardous Waste, 2003.

CFR, 2003c. Title 40, Code of Federal Regulations, Section 261.7, Residues of Hazardous Waste in Empty Containers, 2003.

CFR, 2003d. Title 10, Code of Federal Regulations, Part 61, Licensing Requirement for Land Disposal of Radioactive Waste, 2003.

CFR, 2003e. Title 40, Code of Federal Regulations, Part 261, Identification and Listing of Hazardous Waste, 2003.

CFR, 2003f. Title 10, Code of Federal Regulations, Part 71, Packaging and Transport of Radioactive Material, 2003.

IEEE, 2002. National Electrical Safety Code, IEEE C2-2002, Institute of Electrical and Electronics Engineers, 2002.

NFPA, 2000. Standard for Electrical Safety Requirements for Employee Workplaces, NFPA 70E, National Fire Protection Association, 2000.

NFPA, 1996. National Electrical Code, NFPA 70, National Fire Protection Association, 1996.

NRC, 1985. Monitoring and Reporting Radioactivity in Releases of Radioactive Materials in Liquid and Gaseous Effluents from Nuclear Fuel Processing and Fabrication Plants and Uranium Hexafluoride Production Plants, Regulatory Guide 4.16, Revision 1, U.S. Nuclear Regulatory Commission, December 1985.

(This page intentionally left blank)

TABLES

(This page intentionally left blank)

Table 3.5-1 Codes And Standards

Page 1 of 3

ACI 318-99, Building Code Requirements for Structural Concrete, 1999.
ACI 349-90, Code Requirements for Nuclear Safety Related Concrete Structures, 1990.
AIChE, Guidelines for Hazard Evaluation Procedures, 1992.
AISC Manual of Steel Construction – Allowable Stress Design, Ninth Edition, 1989
ANSI N14.1-2001, American National Standard for Nuclear Materials - Uranium Hexafluoride Packaging for Transport, 2001.
ANSI N15.5-1972, Statistical Terminology and Notation for Nuclear Materials Management, 1972.
ASCE 58, Structural Analysis and Design of Nuclear Plant Facilities, Manuals and Reports on Engineering Practice, 1980.
ASCE 7-98, Minimum Design Loads for Building and Other Structures, 1998.
ASME B31.3-2002, Process Piping, 2002.
ASME, Boiler and Pressure Vessel Code, Section VIII, Division 1, 1999.
ASME, NQA-1-1994, Quality Assurance Requirements for Nuclear Facility Applications, 1994.
ASME, NQA-1a-1995, Addenda to ASME NQA-1-1994 Edition, Quality Assurance Requirements for Nuclear Facility Applications, 1995.
ASTM C761-01 - Standard Test Methods for Chemical, Mass Spectrometric, Spectrochemical, Nuclear, and Radiochemical Analysis of Uranium Hexafluoride, 2001.
ASTM E 814, Fire Tests of Through-Penetration Fire Stops.
ERDA 76-21, Nuclear Air Cleaning Handbook, 1976.
IEEE 336, Standard Installation, Inspection, and Testing Requirements for Power, Instrumentation, and Control Equipment at Nuclear Facilities, 1991.
IEEE C2-2002, National Electrical Safety Code, 2002.

Table 3.5-1 Codes And Standards

ISO 668: 1995, Series 1 Freight Containers - Classification, Dimensions and Ratings, 1995.
NFPA 1, Fire Prevention Code, 1997.
NFPA 10, Portable Fire Extinguishers, 1994.
NFPA 101, Life Safety Code, 1997.
NFPA 12, Carbon Dioxide Systems, 1993.
NFPA 13, Installation of Sprinkler Systems, 1996.
NFPA 14, Standpipe, Private Hydrant and Hose Systems, 1996.
NFPA 15, Water Spray Fixed Systems for Fire Protection, 1996.
NFPA 20, Installation of Stationary Pumps, 1996.
NFPA 2001, Clean Agent Fire Extinguishing Systems, 1996.
NFPA 22, Water Tanks for Private Fire Protection, 1996.
NFPA 221, Fire Walls and Fire Barrier Walls, 1997.
NFPA 24, Private Fire Service Mains and Their Appurtenances, 1995.
NFPA 25, Water Based Fire Protection Systems, 1995.
NFPA 30, Flammable and Combustible Liquids Code, 1996.
NFPA 5000, Building Construction and Safety Code, 2003.
NFPA 54, National Fuel Gas Code, 1996.
NFPA 55, Compressed & Liquefied Gases in Cylinders, 1993.
NFPA 58, Liquefied Petroleum Gas Code, 2001.
NFPA 600 Industrial Fire Brigades, 1996.
NFPA 70, National Electric Code, 1996.
NFPA 704, Standard System for the Identification of the Hazards of Materials for Emergency Response, 2001.
NFPA 72, National Fire Alarm Code, 1996.
NFPA 75, Electronic Computer/Data Processing Systems, 1995.
NFPA 780, Lightning Protection Systems, 1997.
NFPA 80, Fire Doors and Fire Windows, 1995.
NFPA 801, Fire Protection for Facilities Handling Radioactive Materials, 2003.
NFPA 80A, Exterior Fire Exposures, 1993.
NFPA 90A, Installation of Air Conditioning and Ventilating Systems, 1996.
NFPA 90B, Installation of Warm Air Heating and Air Conditioning Systems, 1996.

Table 3.5-1 Codes And Standards

NFPA 91, Exhaust Systems for Air Conveying of Materials, 1995.
NFPA, Fire Protection Handbook, 18th Edition, Section 9, Chapter 30, Nuclear Facilities, 1997.
NFPA 110, Standard for Emergency and Standby Power Systems, 2002.
NFPA 111, Standard on Stored Electrical Energy Emergency and Standby Power Systems, 2001.
NFPA 70E, Standard for Electrical Safety Requirements for Employee Workplaces, 2000.
NFPA 79, Electrical Standard for Industrial Machinery, 1997.
PCI Design Handbook, Fifth Edition, 1999.
Uniform Building Code (UBC), 1997.
Uniform Mechanical Code (UMC), 1997.
Uniform Plumbing Code (UPC), 1997.

Table 3.5-2 Compressed Air System Design Parameters

Page 1 of 1

Nos. of Air Compressors and Air System Components Required	Two of each
Design Air Compressor Capacity, each	323 m^3/hr (190 scfm) – Peak 60 m^3/hr (35 scfm) - Normal
Design Compressor Outlet Air Pressure	13 barg (188.5 psig)
Compressed Air Receiver Tank, Operating Pressure	13 barg (188.5 psig)
Compressed Air Distribution System Supply Design Pressure	13 barg (188.5 psig)
Compressed Air Receiver Tank Surge Capacity	100 m^3/hr (58.3 scfm) 6 cycles/valves/1 minute
Compressed Air Receiver Tank Storage Capacity	15 m^3 (530 ft^3) each of two tanks
Compressed Air Dew Point	-40°C at 12.06 barg (-40°F at 175 psig)
Maximum Oil Concentration in Compressed Air	0.5 mg/m^3
Maximum Particle Size in Compressed Air	1.0 micron

Table 3.5-3 Average Water Consumption
Page 1 of 1

	Average (L/s (gal/d))
Potable Water	0.2 L/s (5,250 gal/d)
Process Water (Cooling Tower Water)	2.5 L/s (56,338 gal/d)
Process Water (Other)	0.1 L/s (1,835 gal/d)
Total	2.8 L/s (63,423 gal/d)

Table 3.5-4 Deionized Water Supply and Distribution System Design Parameters

Page 1 of 1

Process Water Make Up Rate	0-2.5 L/s (0-40 gpm)
Deionized Water Distribution Supply Rate	2.6 L/s (40 gpm)
Deionized Water Storage Tank Capacity	1893 L (500 gal)
Deionized Water Distribution Temperature	21.1°C (70°F maximum)
Deionized Water Quality: Minimum Resistivity Maximum Total Silica	 12 Megohm/cm at 25°C 1.0 mg/l as SiO_2

Table 3.5-5 Hot Water System Design Parameters

Page 1 of 1

Design Hot Water Circulation Supply and Return Flow Rate	Maximum, 69.4 L/s (1100 gpm) Operating, 63.1 L/s (1000 gpm)
Design Hot Water Circulation Supply Temperature	82. 2°C (180°F)
Design Hot Water Circulation Minimum Return Temperature	71.1°C (160°F)
Hot Water Expansion Tank Capacity	3785 L, (1000 gal), each for two tanks
Hot Water Design Heating Load	2943.3 kW (10.045 Million BTUH)
Hot Water Boilers	2 boilers for 100% redundancy
Boiler Fuel Source	Natural Gas fired

Table 3.5-6 HVAC Cooling Water System Design Parameters
Page 1 of 1

HVAC Cooling Water System	
Supply Temperature	5.6°C (42°F)
Return Temperature	11.1°C (52°F)

User System Design Duties	
HVAC Systems	12,207.5 kW (11580 Btu/s)

Table 3.5-7 Centrifuge Cooling Water Distribution System Design Parameters

Page 1 of 1

Centrifuge Cooling Tower Water Supply Loop Circulation Rate	397 L/s (6300 gpm)
Centrifuge Cooling Tower Water Supply Loop Temperature	32.3°C (90.1°F)
Centrifuge Cooling Tower Water Return Loop Temperature	28°C (82.5°F)
Centrifuge Cooling Water Distribution Loop Circulation Rate	133 L/s (2109 gpm), per 2 Cascade Halls 66.5 L/s (1054.5 gpm), per Cascade Hall
Centrifuge Cooling Water Distribution Loop Supply Temperature	28.0°C (82.5°F maximum)
Centrifuge Cooling Water Distribution Loop Return Temperature	32.3°C (90.1°F maximum)
Cascade Cooling Water Temperature Control Range	30.5 to 31.9°C (86.9 to 89.4°F)

Table 3.5-8 Nitrogen System Design Parameters

Page 1 of 1

Liquid Nitrogen Storage Capacity	4 Storage Tanks, each at 9464 L, (2500 gal), 30 day supply each.
Liquid Nitrogen Supply Rate	0.315 L/s (5 gpm)
Liquid Nitrogen Supply Pressure	3.1 barg (45 psig)
Gaseous Nitrogen Supply Rate	170 m^3/hr (100 scfm)
Gaseous Nitrogen Supply Pressure	2.4 barg (35 psig)
Nitrogen Maximum Particle Size	1.0 micron

Table 3.5-9 Liquid Effluent Collection and Treatment System, Collection Tanks

Page 1 of 1

TANK	QUANTITY	SIZE L (gal)	CONTENTS
Spent Citric Acid Collection	1	1,325 (350)	Spent citric acid
Degreaser Water Collection	1	1,325 (350)	Used degreaser water
Miscellaneous Effluent Collection	1	1,325 (350)	Lab wastes, condensate, floor washings
Hand Wash/Shower Monitor	3	15,142 (4,000)	Water from the active areas hand washes and showers
Laundry Effluent Monitor	3	3,785 (1,000)	Washing machine water

Table 3.5-10 Liquid Effluent Collection and Treatment System, Monitoring and Treatment Tanks

Page 1 of 1

TANK	QUANTITY	SIZE L (gal)	PURPOSE
Precipitation Treatment	1	1,325 (350)	Receives and treats effluents from the Citric Acid Collection Tank, the Degreaser Water Collection Tank, and, the Miscellaneous Effluent Hold Tank.
Contaminated Effluent Hold	1	1,325 (350)	Receives effluent from the Precipitation Treatment Tank. Provides capacity for the effluent batches processed in the Precipitation Treatment Tank.
Evaporator/Dryer Feed	1	1,325 (350)	Receives effluent from the Contaminated Effluent Hold Tank. Provides holding capacity for the effluent batches to be processed in the Evaporator/Dryer. pH is adjusted (lowered) in this tank prior to evaporation / drying.
Distillate	1	1,325 (350)	Receives effluent from the Evaporator/ Dryer.
Treated Effluent Monitor	2	1,325 (350)	Receives effluent from Evaporator/Dryer Distillate Tank. Effluent is sampled and tested in these tanks prior to release to the TEEB or treatment in the polishing demineralizers.

Table 3.5-11 Items Processed in the Decontamination Workshop

Page 1 of 1

Equipment	Typical Annual Quantities
Pump & Component Sets	300
Valves	60 valves
Sample Bottles	4500
Manifolds	118
Flexible Hoses	200
Chemical Trap Bodies	871
Transducers	148
Cylinder Seals	4 Baskets
Sludge Residue Buckets / Lids	44
Scrap Metal	60 Baskets
Scrap Plastic	11 Baskets
Scrap Pipe Wwork, Fittings, Connections	85 Baskets
Miscellaneous	10 Baskets

(This page intentionally left blank)

FIGURES

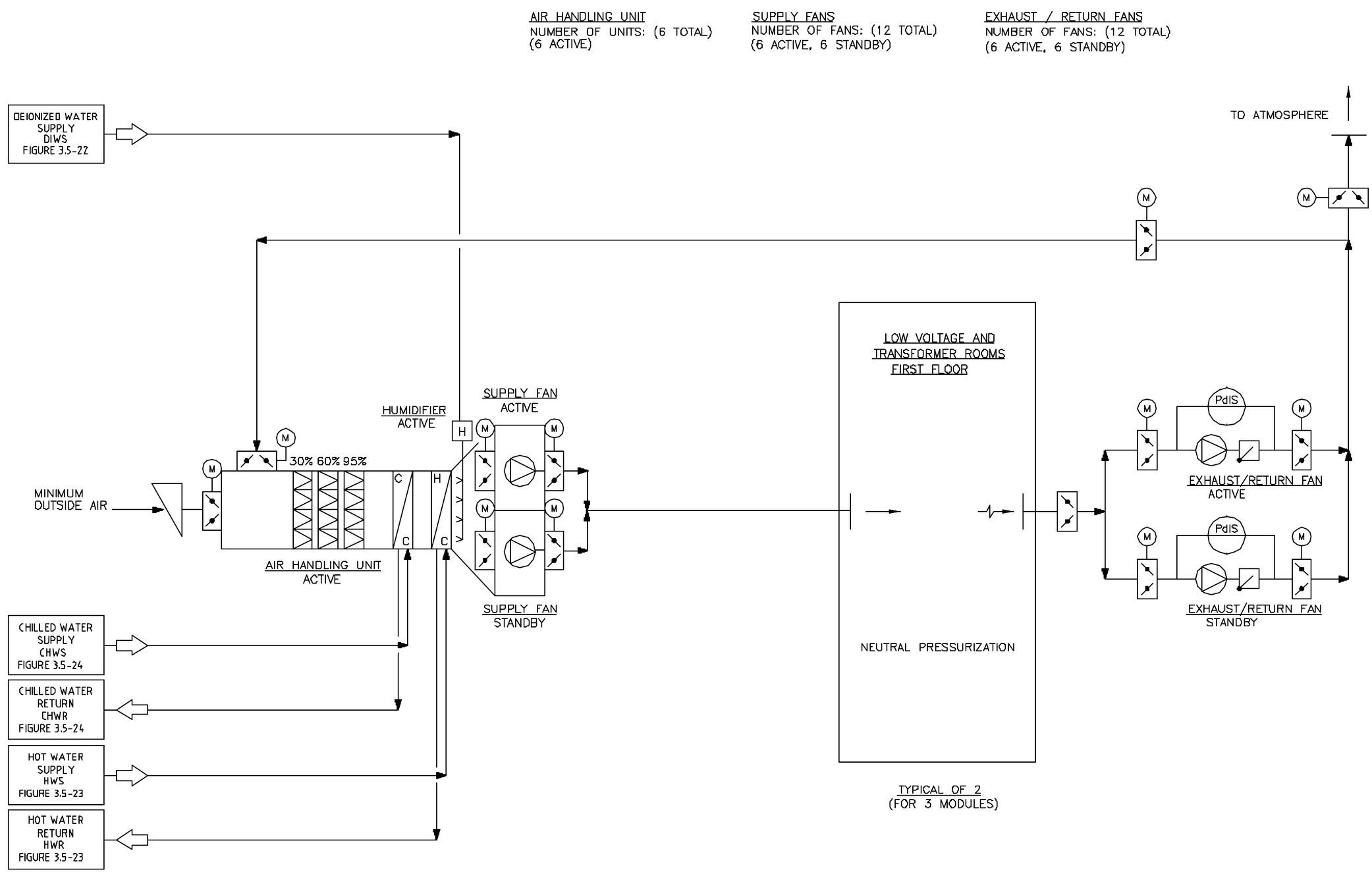

LOCKWOOD GREENE
ENGINEERING & CONSTRUCTION

REFERENCE NUMBER
1000-H-1004

FIGURE 3.5-1

FLOW DIAGRAM
SEPARATIONS BUILDING MODULE FIRST FLOOR ELECTRICAL ROOM – HVAC SYSTEM

REVISION DATE: DECEMBER 2003

AIR HANDLING UNITS
NUMBER OF UNITS: (6 TOTAL)
(6 ACTIVE)

SUPPLY FANS
NUMBER OF FANS: (6 TOTAL)
(6 ACTIVE)

COMPUTER ROOM UNITS
NUMBER OF UNITS: (6 TOTAL)
(3 ACTIVE, 3 STANDBY)

EXHAUST / RETURN FANS
NUMBER OF FANS: (6 TOTAL)
(6 ACTIVE)

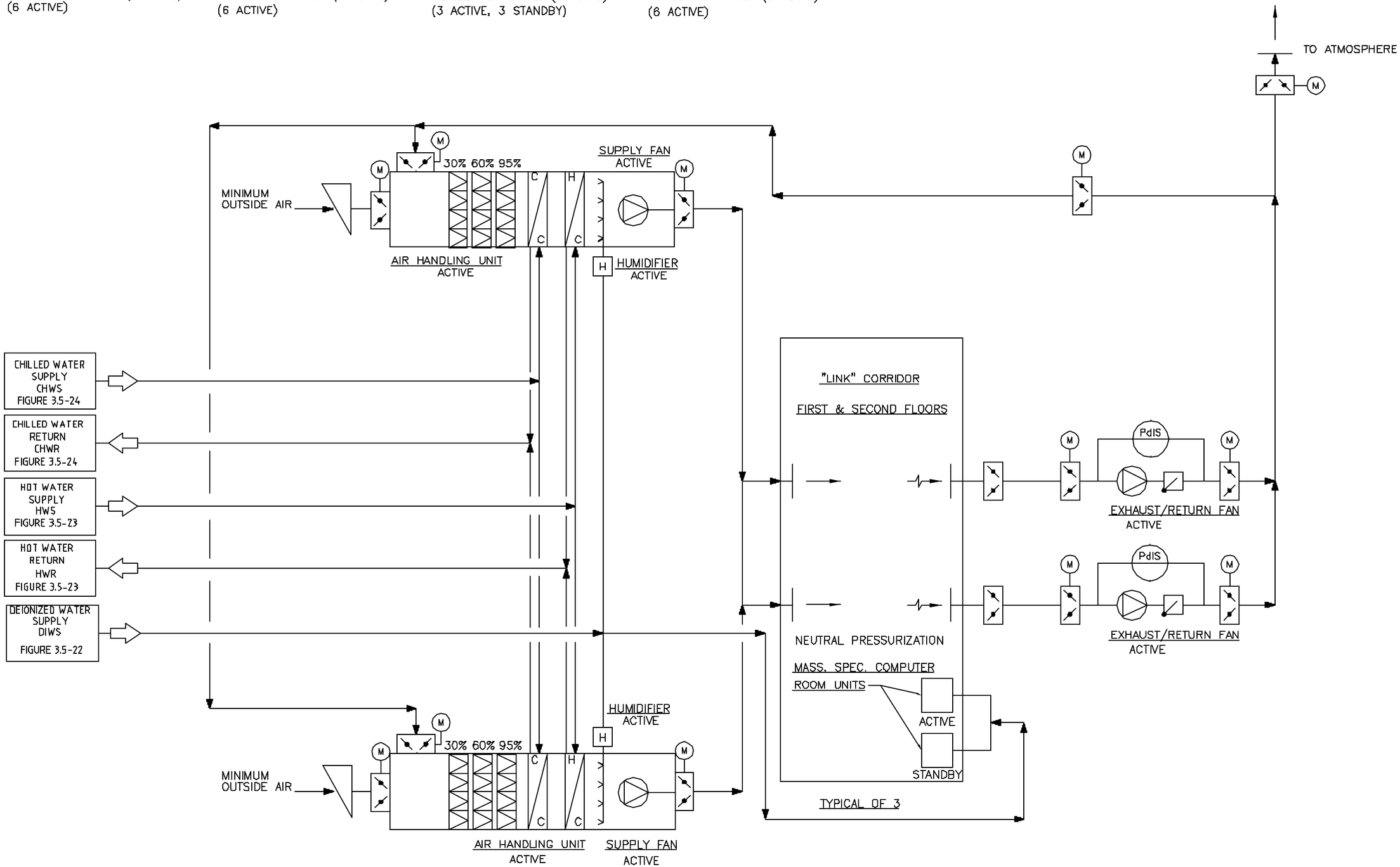

LOCKWOOD GREENE
ENGINEERING & CONSTRUCTION

REFERENCE NUMBER
1000-H-1001

FIGURE 3.5-2

FLOW DIAGRAM
"LINK" CORRIDOR FIRST AND SECOND FLOOR
HVAC SYSTEM

REVISION DATE: DECEMBER 2003

AIR HANDLING UNITS
NUMBER OF UNITS: (12 TOTAL)
(6 ACTIVE, 6 STANDBY)

SUPPLY FANS
NUMBER OF FANS: (12 TOTAL)
(6 ACTIVE, 6 STANDBY)

EXHAUST / RETURN FANS
NUMBER OF FANS:(12 TOTAL)
(6 ACTIVE, 6 STANDBY)

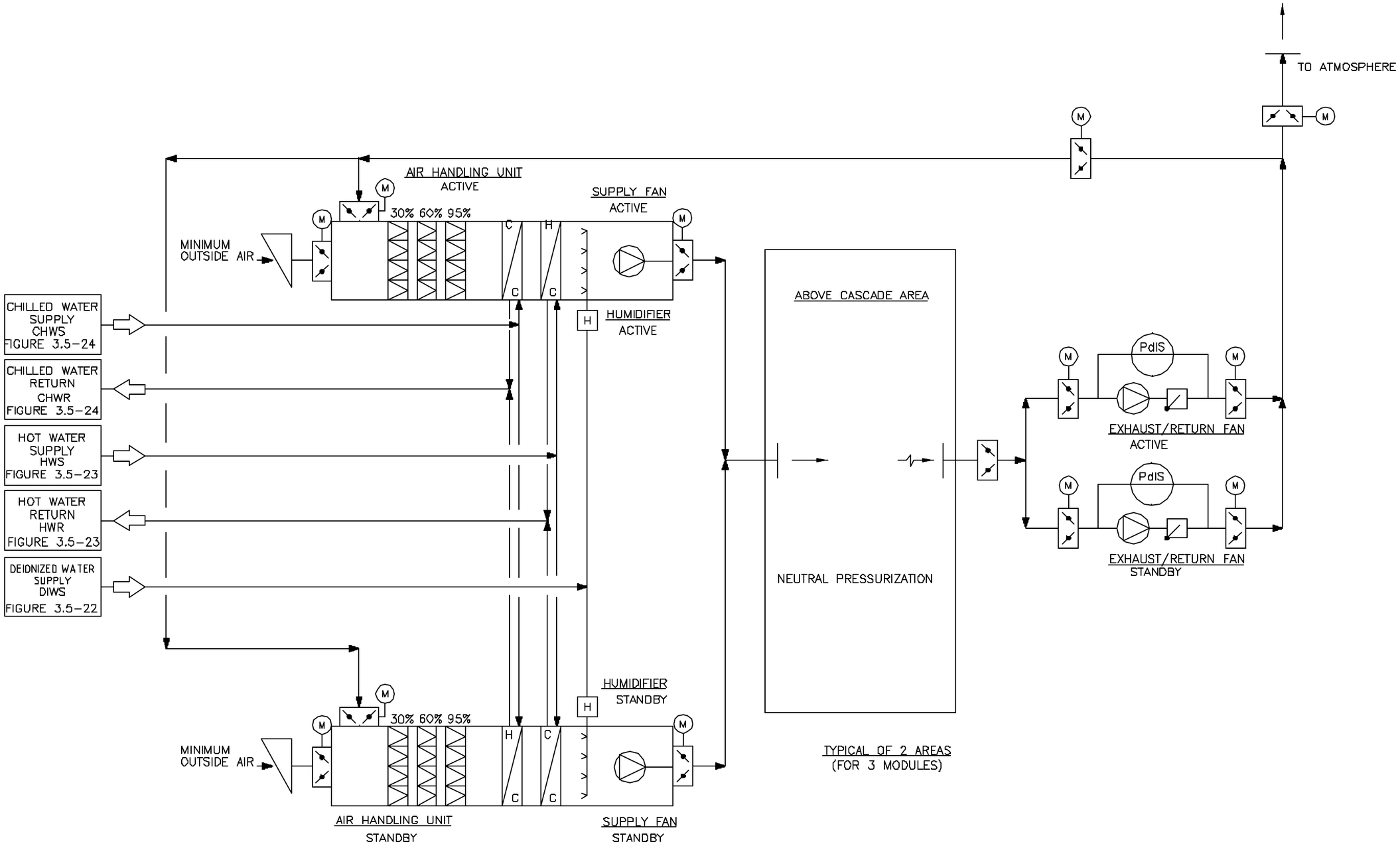

LOCKWOOD GREENE
ENGINEERING & CONSTRUCTION

REFERENCE NUMBER
1000-H-1002

FIGURE 3.5-3
FLOW DIAGRAM
PROCESS SERVICES AREA ABOVE CASCADE
HVAC SYSTEM
REVISION DATE: DECEMBER 2003

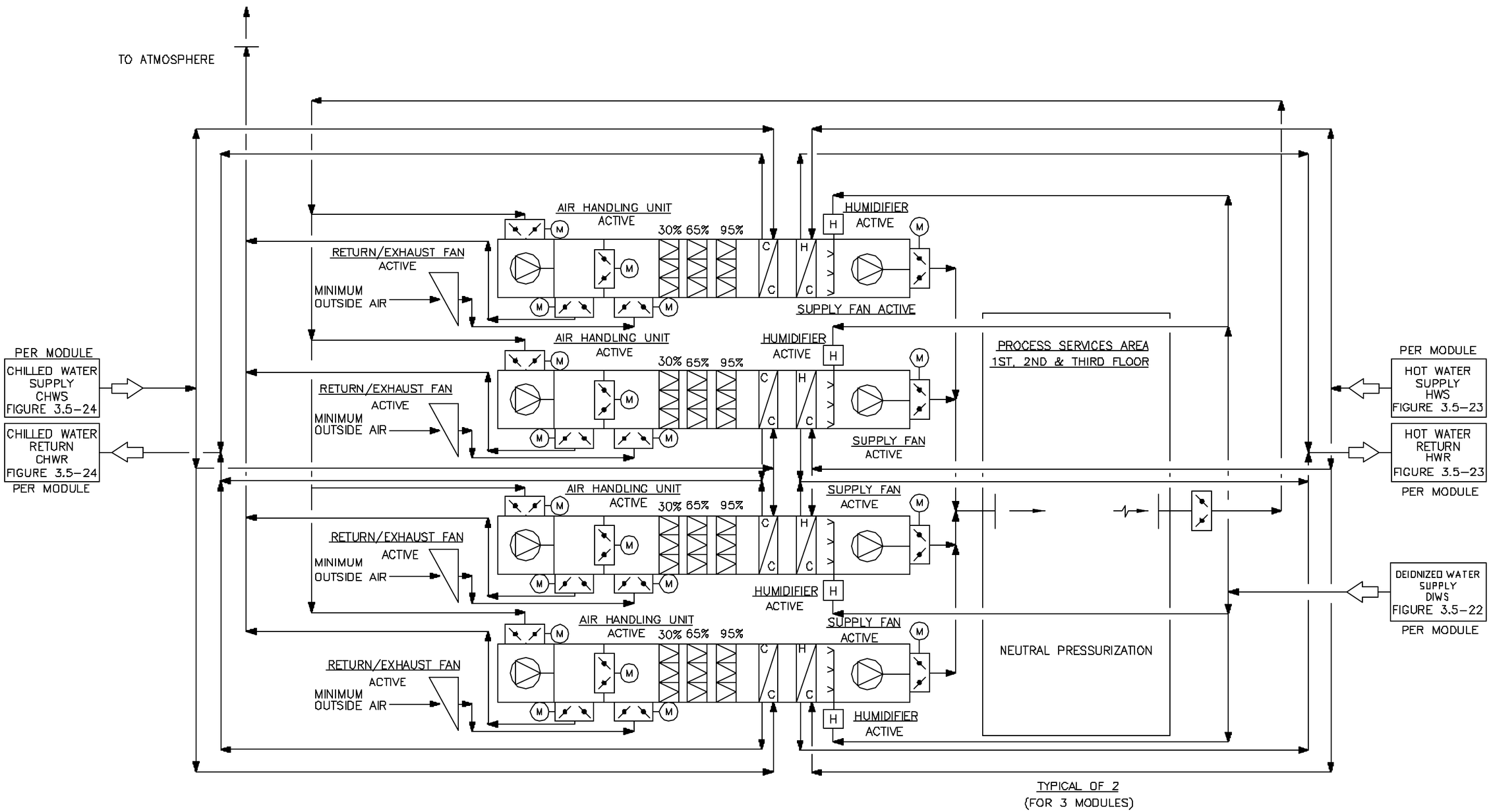

LOCKWOOD GREENE
ENGINEERING & CONSTRUCTION

REFERENCE NUMBER
1000-H-1003

FIGURE 3.5-4

FLOW DIAGRAM
PROCESS SERVICES AREAS FIRST, SECOND AND THIRD FLOOR, HVAC SYSTEM

REVISION DATE: DECEMBER 2003

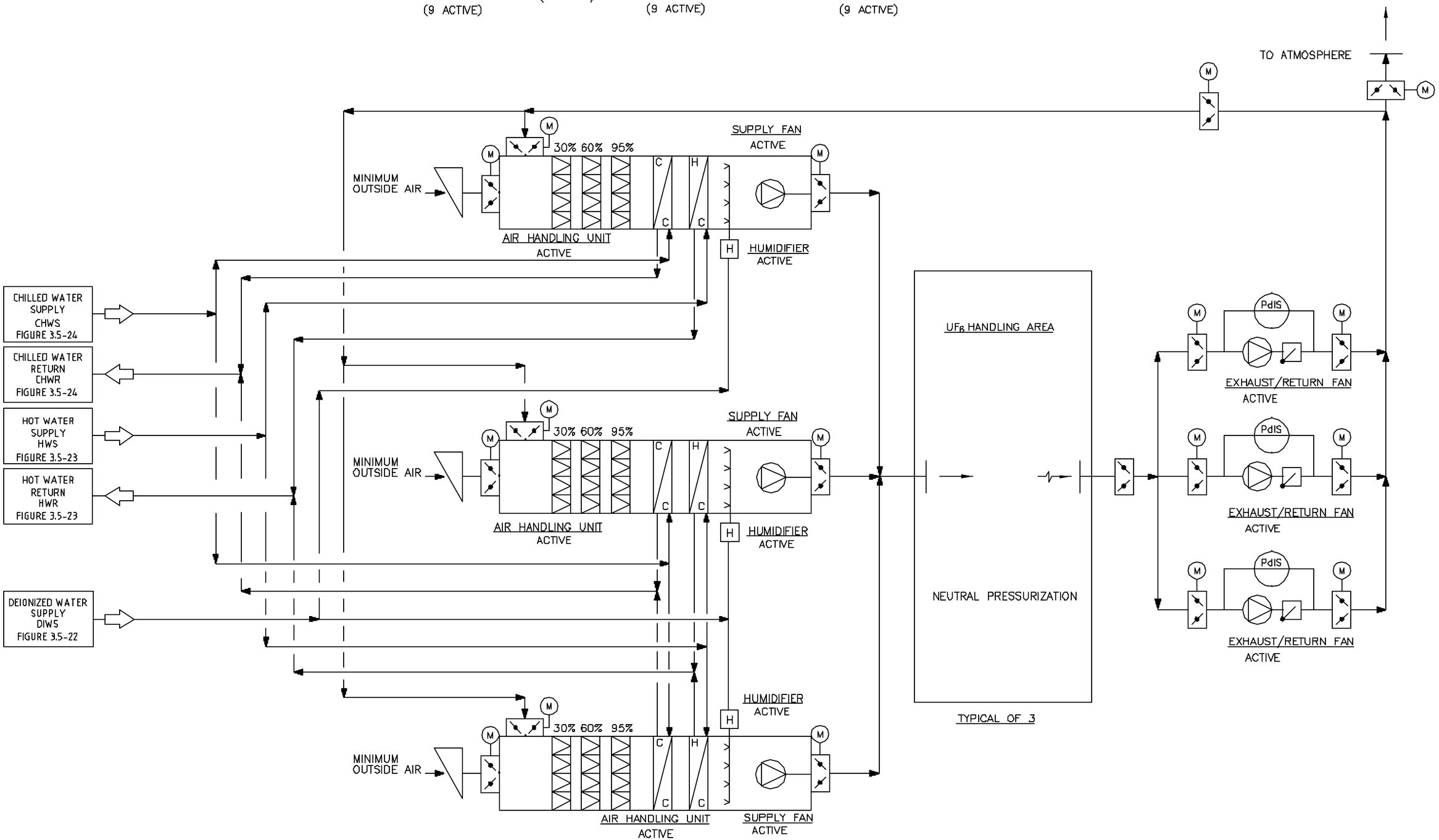

LOCKWOOD GREENE
ENGINEERING & CONSTRUCTION

REFERENCE NUMBER
1000-H-1000

FIGURE 3.5-5

FLOW DIAGRAM
UF6 HANDLING AREA
HVAC SYSTEM

REVISION DATE: DECEMBER 2003

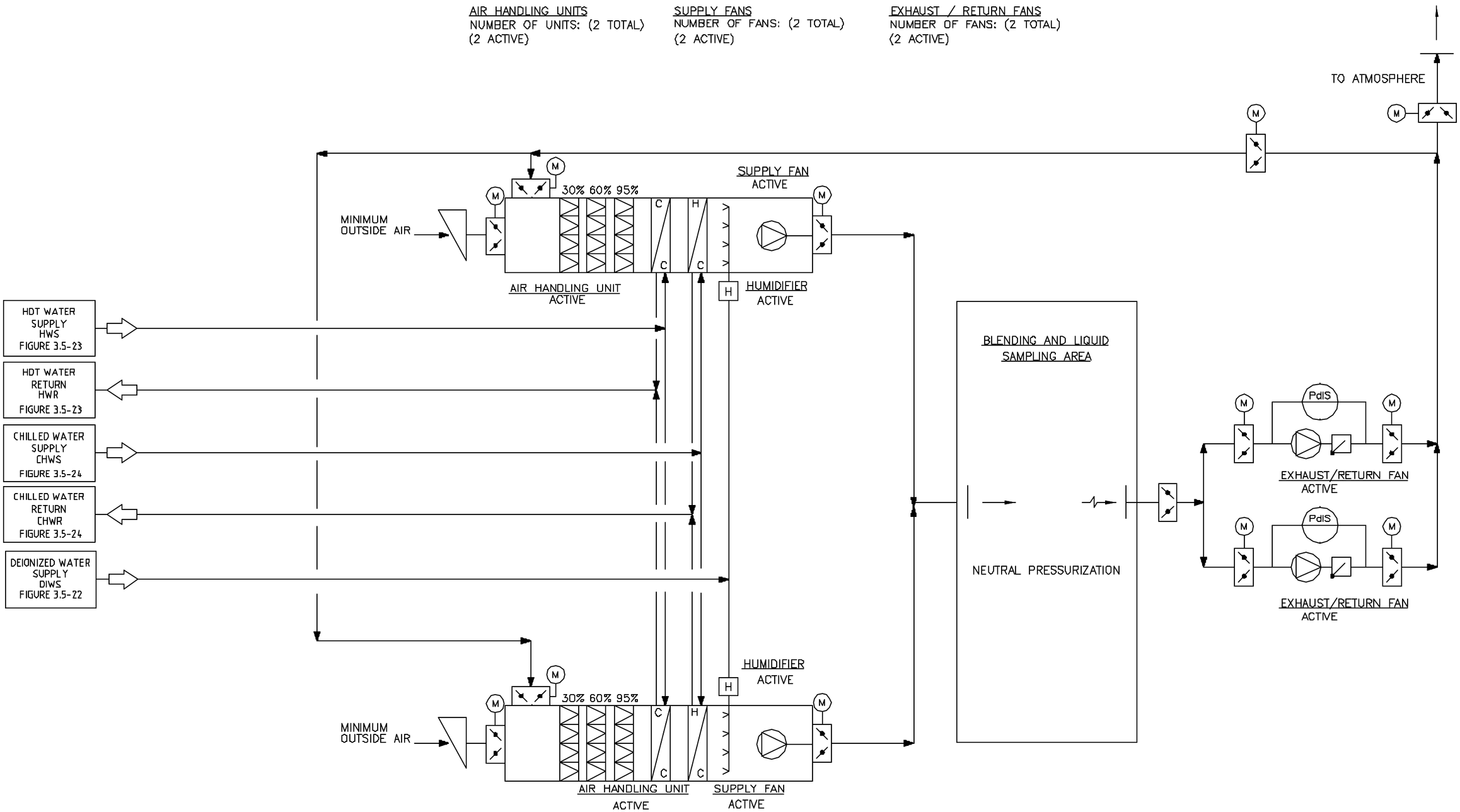

LOCKWOOD GREENE
ENGINEERING & CONSTRUCTION

REFERENCE NUMBER
1200-H-1000

FIGURE 3.5-6

FLOW DIAGRAM
BLENDING AND LIQUID SAMPLING AREA
HVAC SYSTEM

REVISION DATE: DECEMBER 2003

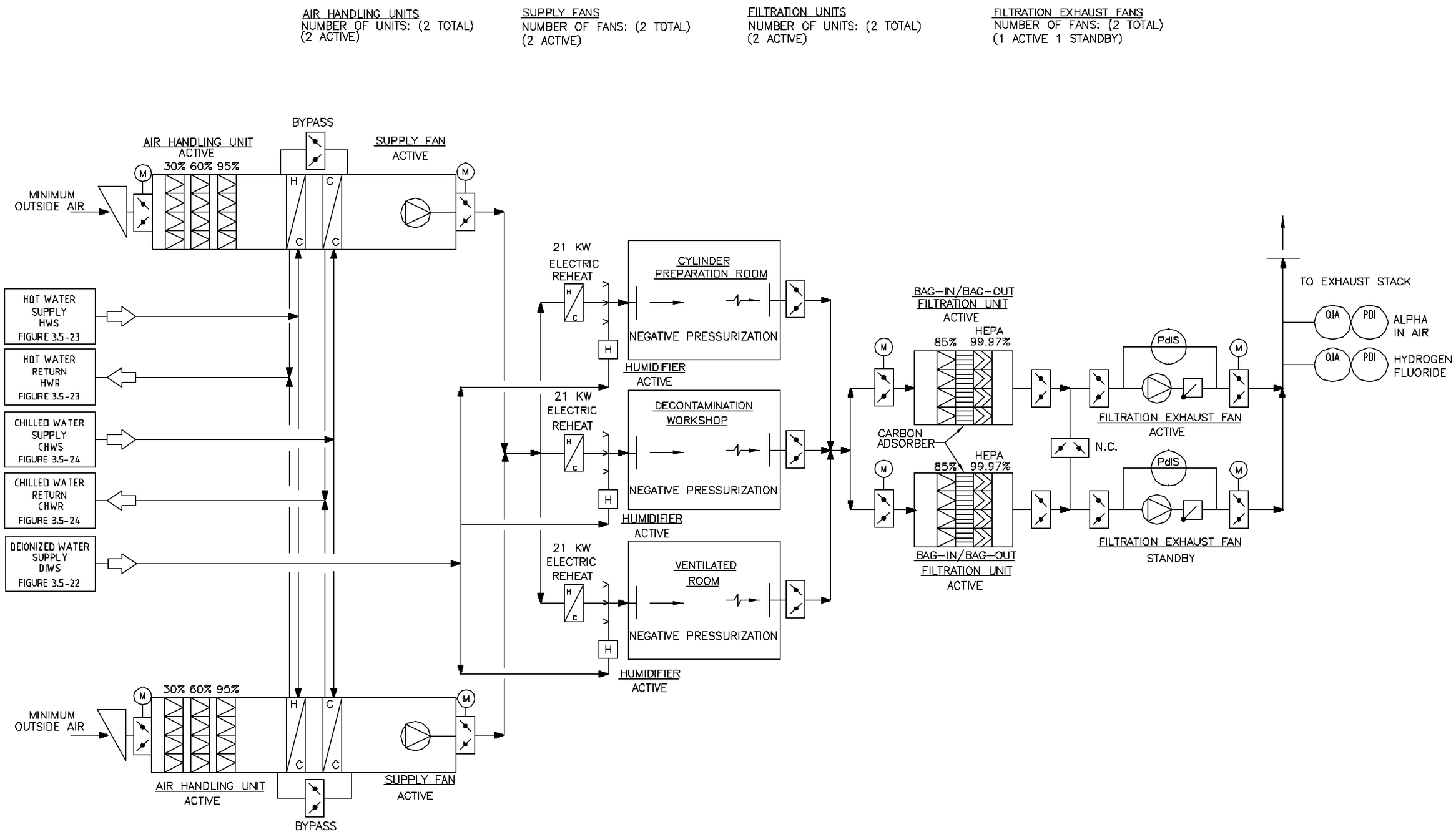

LOCKWOOD GREENE
ENGINEERING & CONSTRUCTION

REFERENCE NUMBER
1500-H-1001

FIGURE 3.5-7
FLOW DIAGRAM
TSB CONTAMINATION WORKSHOPS
HVAC SYSTEM
REVISION DATE: DECEMBER 2003

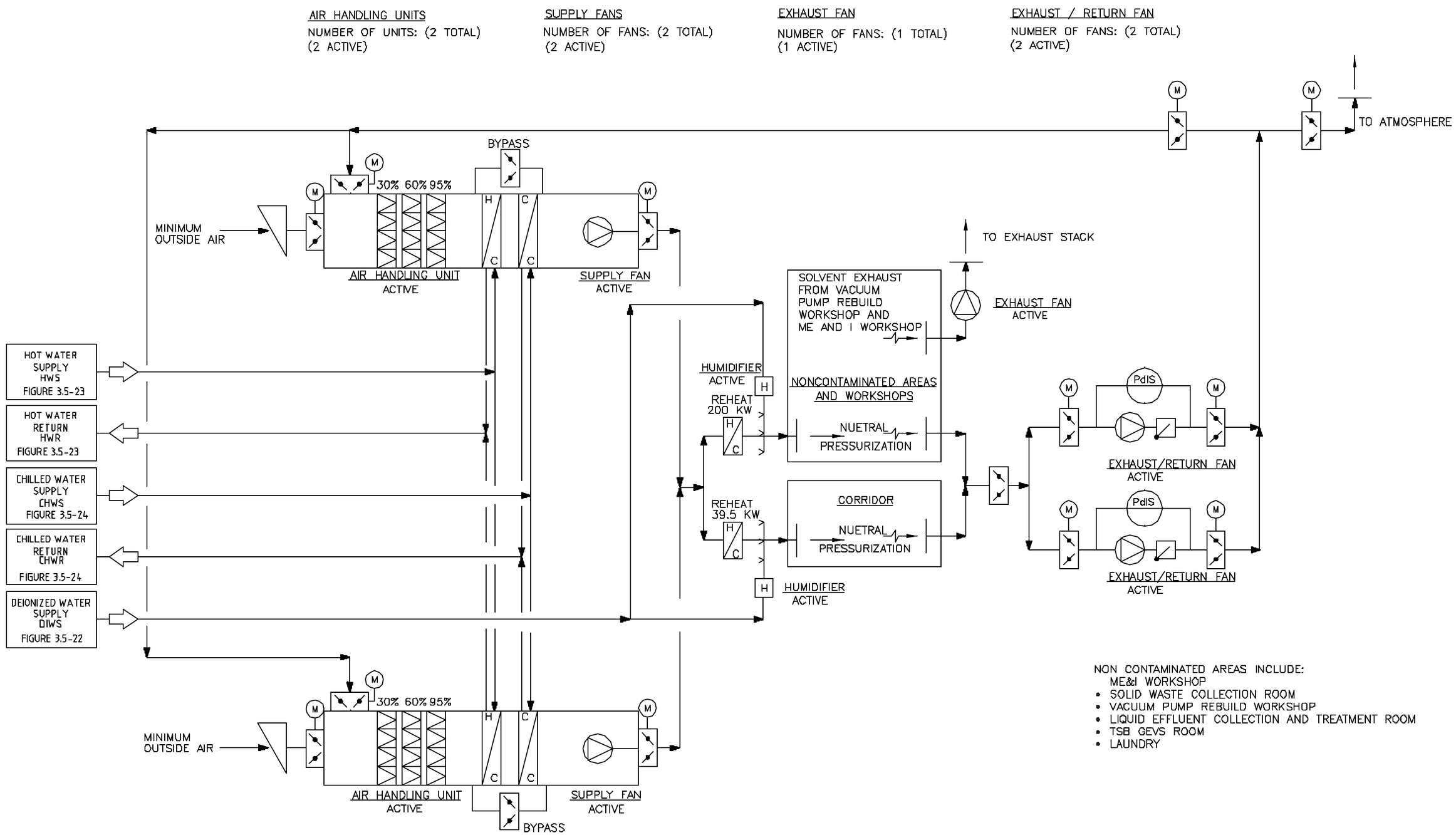

NON CONTAMINATED AREAS INCLUDE:
ME&I WORKSHOP

- SOLID WASTE COLLECTION ROOM
- VACUUM PUMP REBUILD WORKSHOP
- LIQUID EFFLUENT COLLECTION AND TREATMENT ROOM
- TSB GEVS ROOM
- LAUNDRY

LOCKWOOD GREENE
ENGINEERING & CONSTRUCTION

REFERENCE NUMBER
1500-H-1003

FIGURE 3.5-8

FLOW DIAGRAM
TSB NONCONTAMINATED AREAS
HVAC SYSTEM

REVISION DATE: DECEMBER 2003

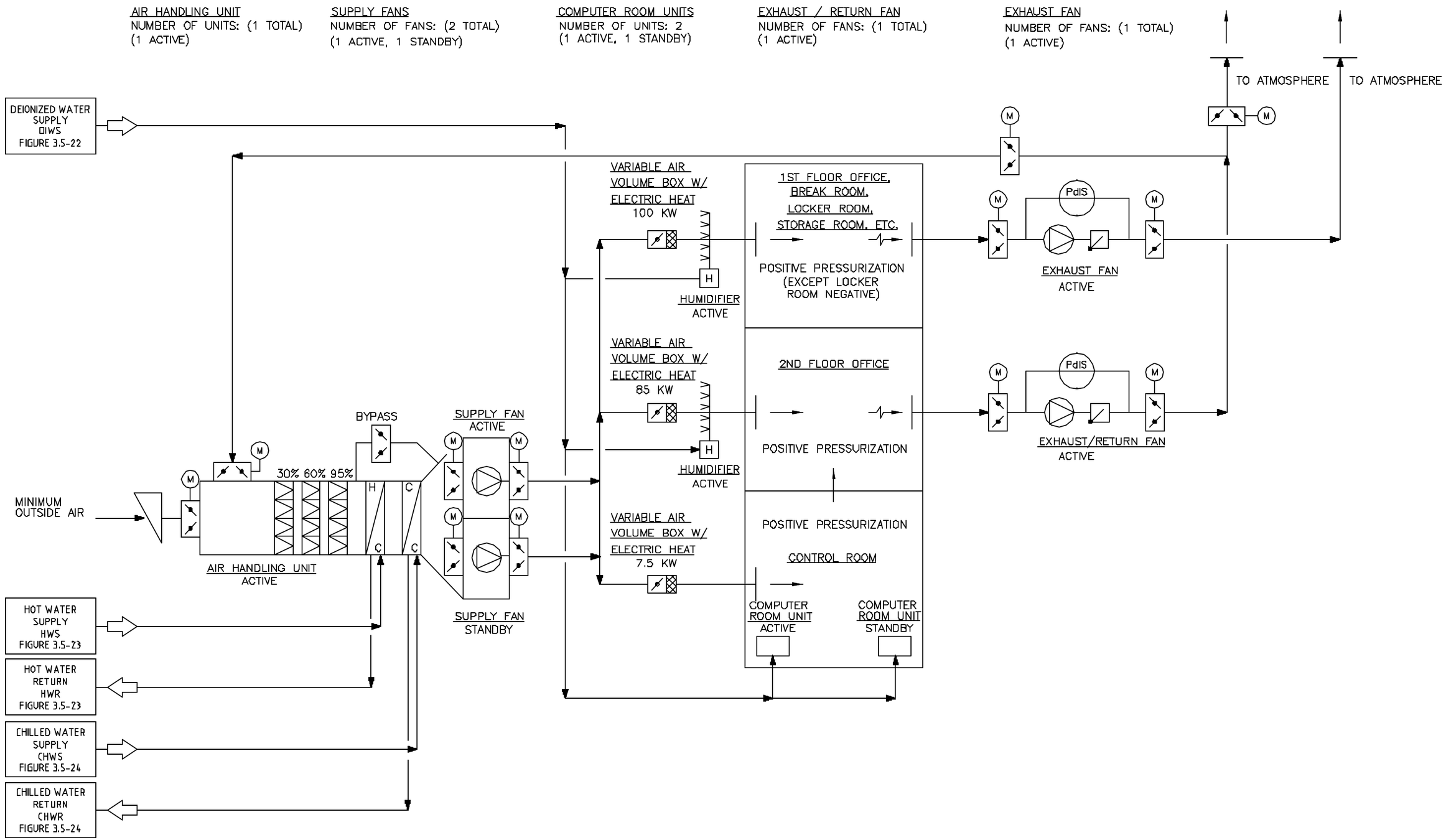

LOCKWOOD GREENE
ENGINEERING & CONSTRUCTION

REFERENCE NUMBER
1500-H-1000

FIGURE 3.5-9

FLOW DIAGRAM
TSB OFFICES AND CONTROL ROOM
HVAC SYSTEM

REVISION DATE: DECEMBER 2003

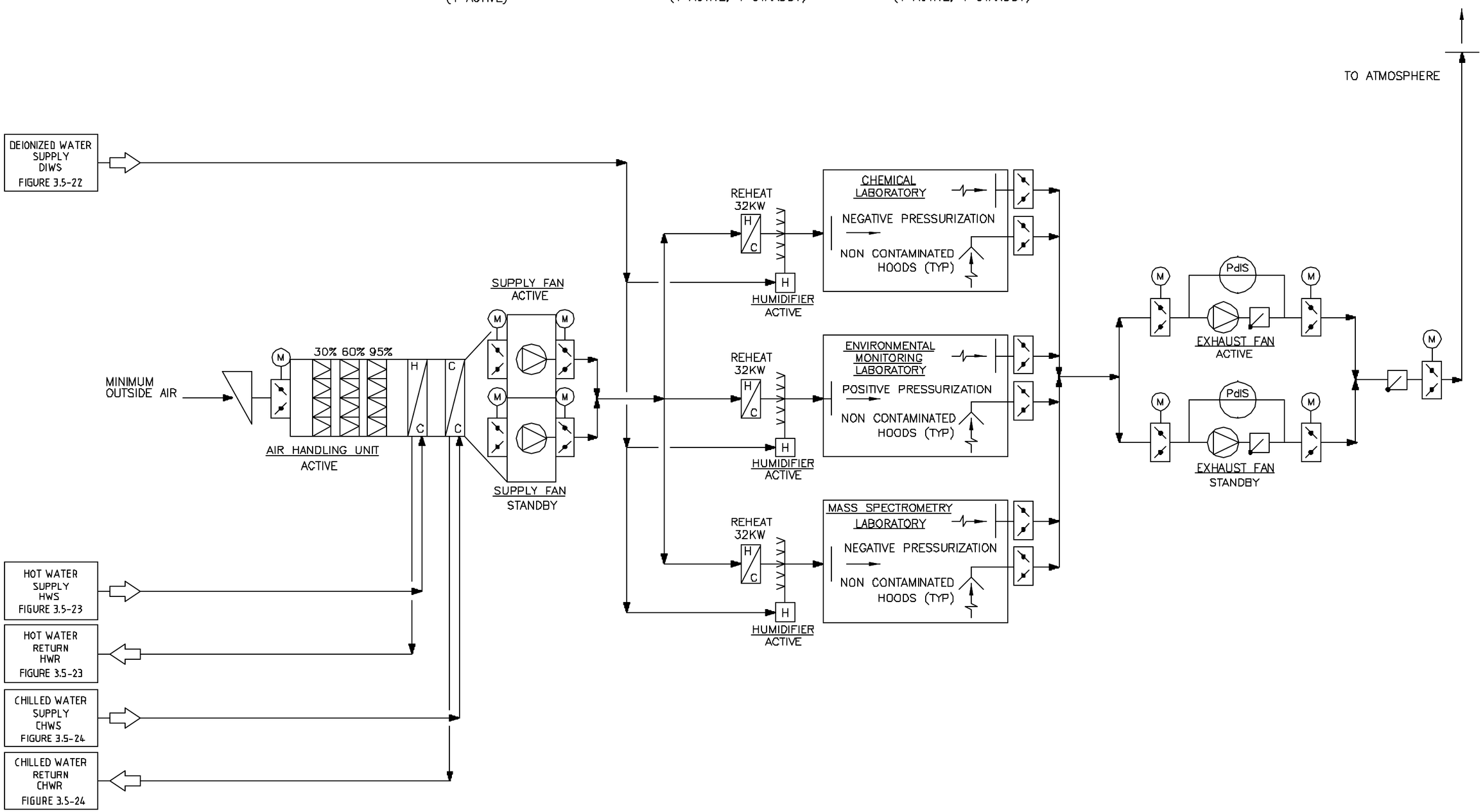

LOCKWOOD GREENE
ENGINEERING & CONSTRUCTION

REFERENCE NUMBER
1500-H-1002

FIGURE 3.5-10
FLOW DIAGRAM
TSB LABS
HVAC SYSTEM
REVISION DATE: DECEMBER 2003

POTENTIALLY CONTAMINATED ZONES

- ZONE A – NEGATIVE PRESSURE WITHOUT HEPA FILTRATION
- ZONE B – NEUTRAL
- ZONE C – NEGATIVE PRESSURE WITH HEPA FILTRATION
- ZONE D – POSITIVE PRESSURE WITHOUT HEPA FILTRATION

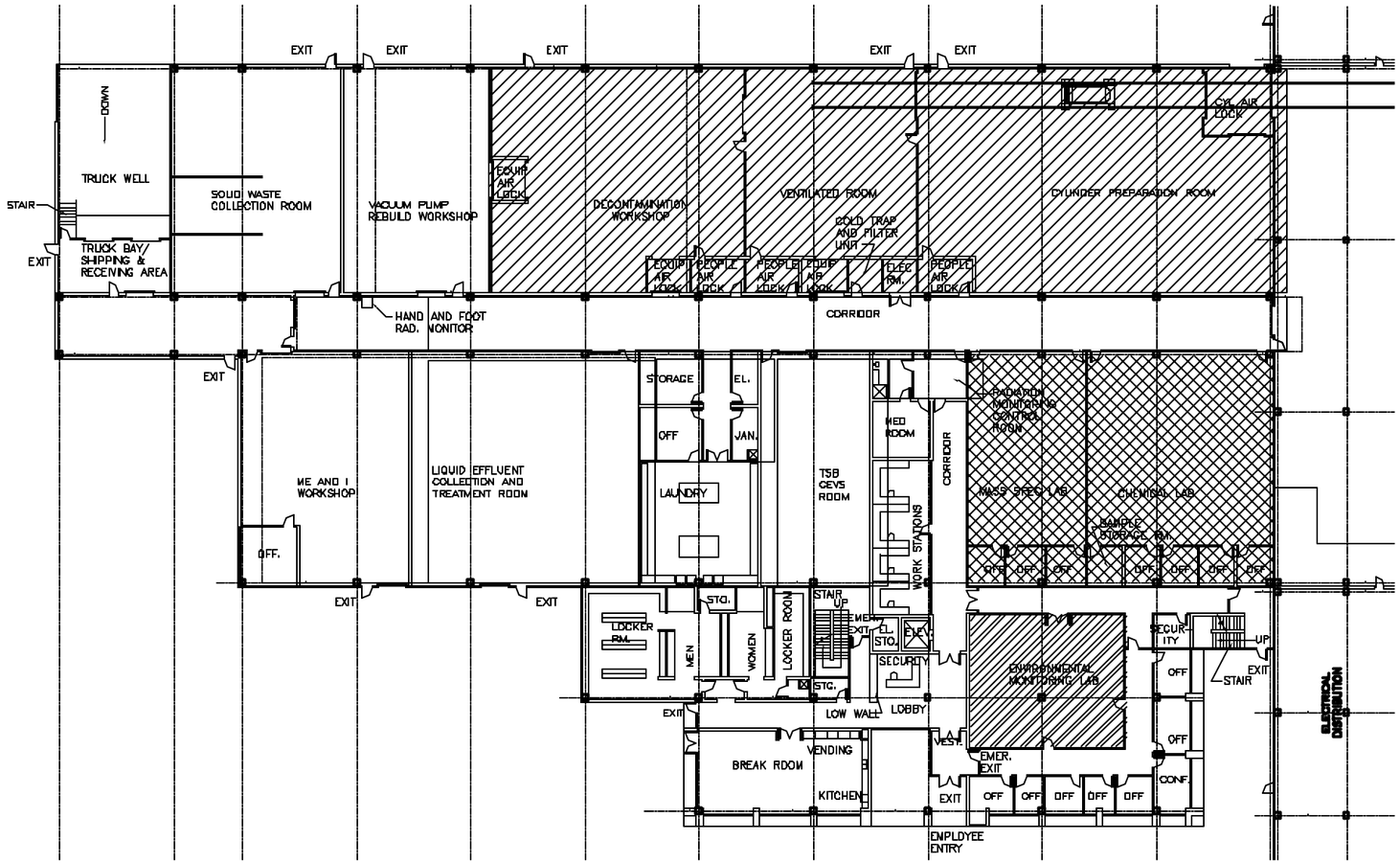

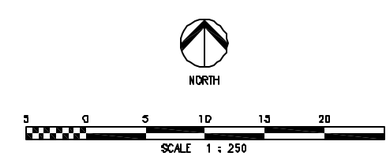

LOCKWOOD GREENE ENGINEERING & CONSTRUCTION

REFERENCE NUMBER
1500–H–3000

FIGURE 3.5-11

CODE AND AREA CLASSIFICATIONS
TECHNICAL SERVICES BUILDING
HVAC PRESSURIZATION

REVISION DATE: DECEMBER 2003

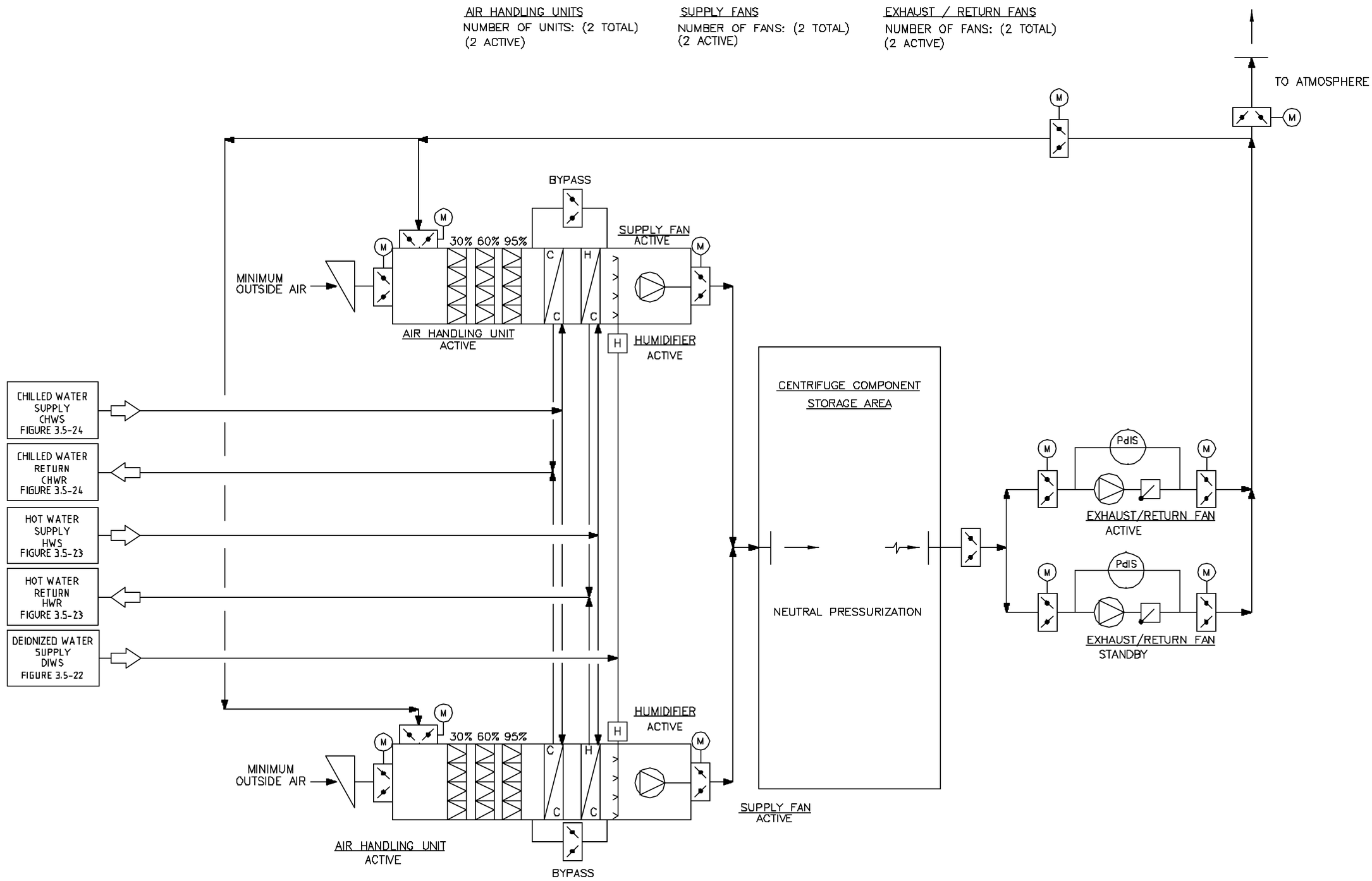

LOCKWOOD GREENE
ENGINEERING & CONSTRUCTION

REFERENCE NUMBER
1300-H-1000

FIGURE 3.5-12

FLOW DIAGRAM
CAB CENTRIFUGE COMPONENT STORAGE AREA
HVAC SYSTEM

REVISION DATE: DECEMBER 2003

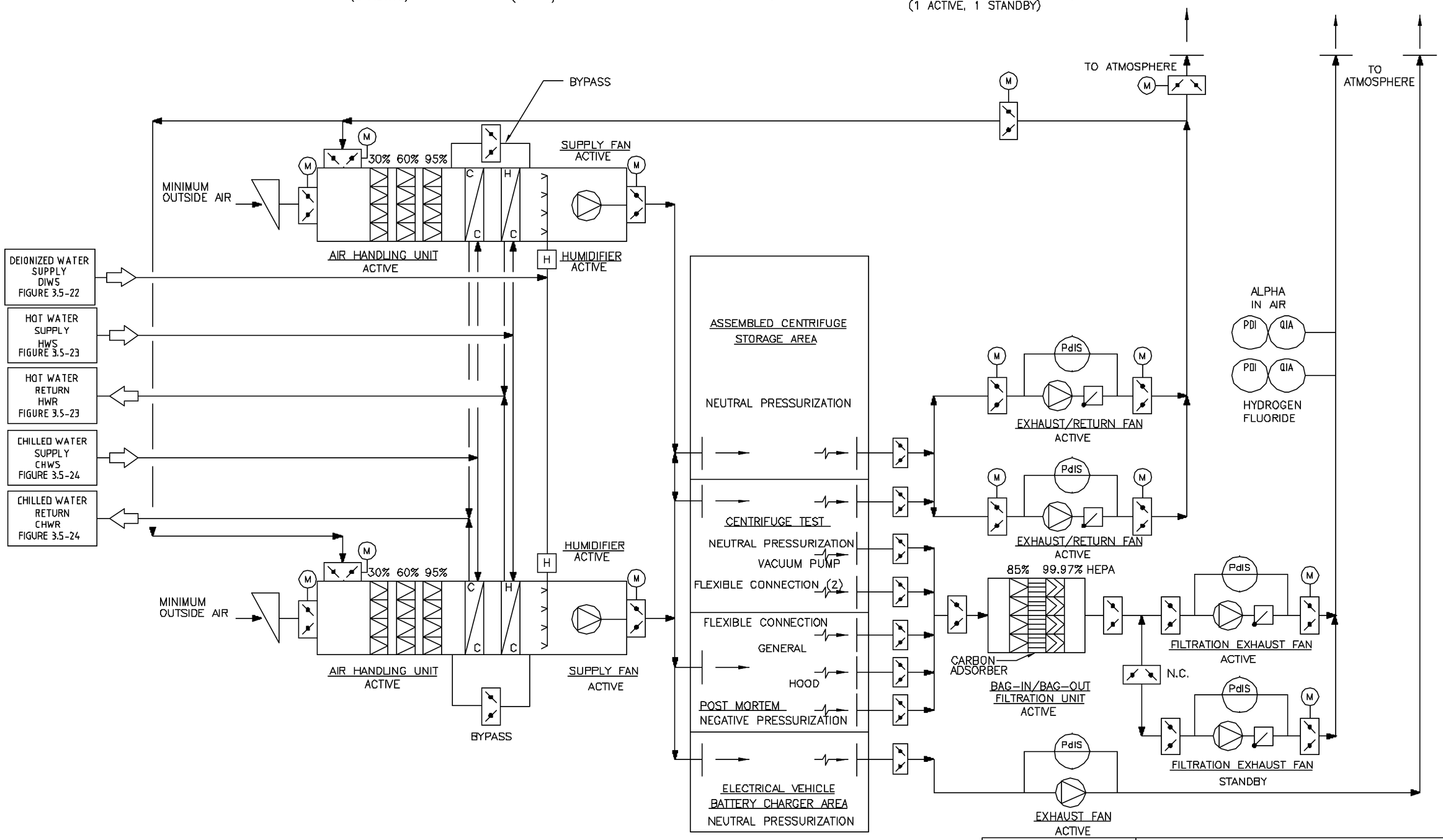

LOCKWOOD GREENE
ENGINEERING & CONSTRUCTION

REFERENCE NUMBER
1300-H-1003

FIGURE 3.5-13

FLOW DIAGRAM
CAB CENTRIFUGE STORAGE AND MISC AREAS
HVAC SYSTEM

REVISION DATE: DECEMBER 2003

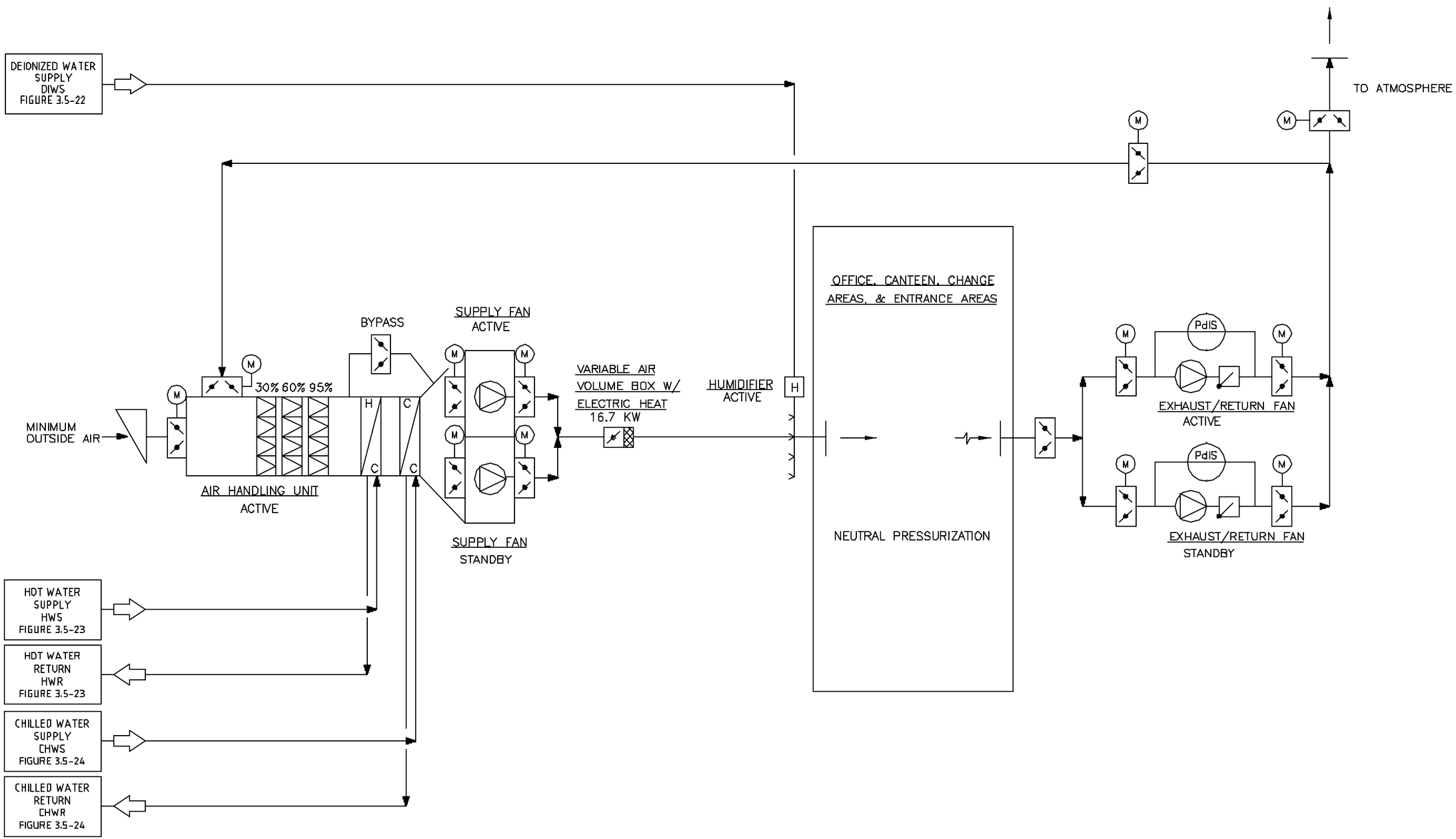

LOCKWOOD GREENE
ENGINEERING & CONSTRUCTION

REFERENCE NUMBER
1300-H-1001

FIGURE 3.5-14

FLOW DIAGRAM
CAB OFFICES AND MISCELLANEOUS ROOMS
HVAC SYSTEM

REVISION DATE: DECEMBER 2003

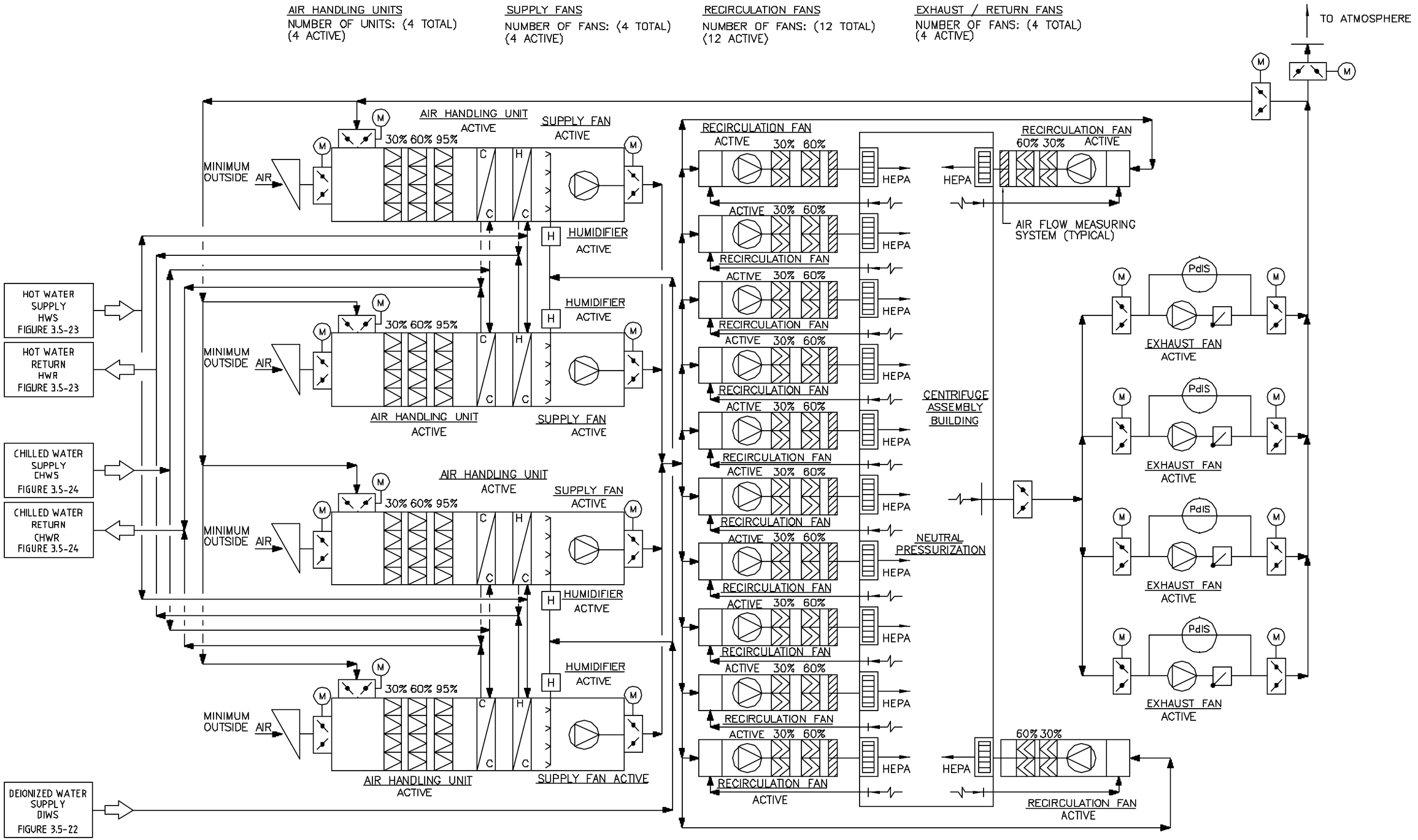

LOCKWOOD GREENE
ENGINEERING & CONSTRUCTION

REFERENCE NUMBER
1300-H-1002

FIGURE 3.5-15

FLOW DIAGRAM
CENTRIFUGE ASSEMBLY AREA
HVAC SYSTEM

REVISION DATE: DECEMBER 2003

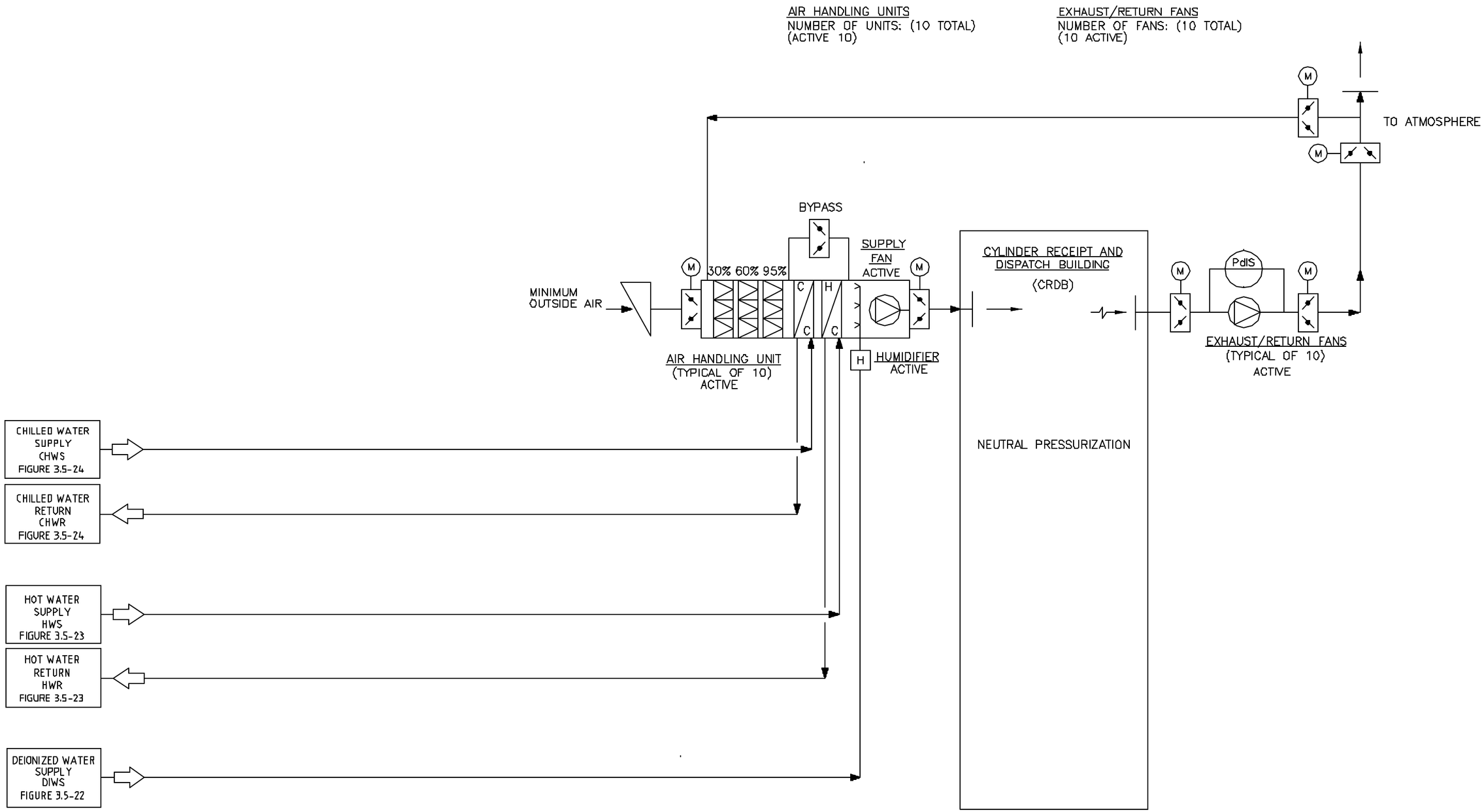

LOCKWOOD GREENE
ENGINEERING & CONSTRUCTION

REFERENCE NUMBER
1100-H-1000

FIGURE 3.5-16

FLOW DIAGRAM
CYLINDER RECEIPT AND DISPATCH BUILDING
HVAC SYSTEM

REVISION DATE: DECEMBER 2003

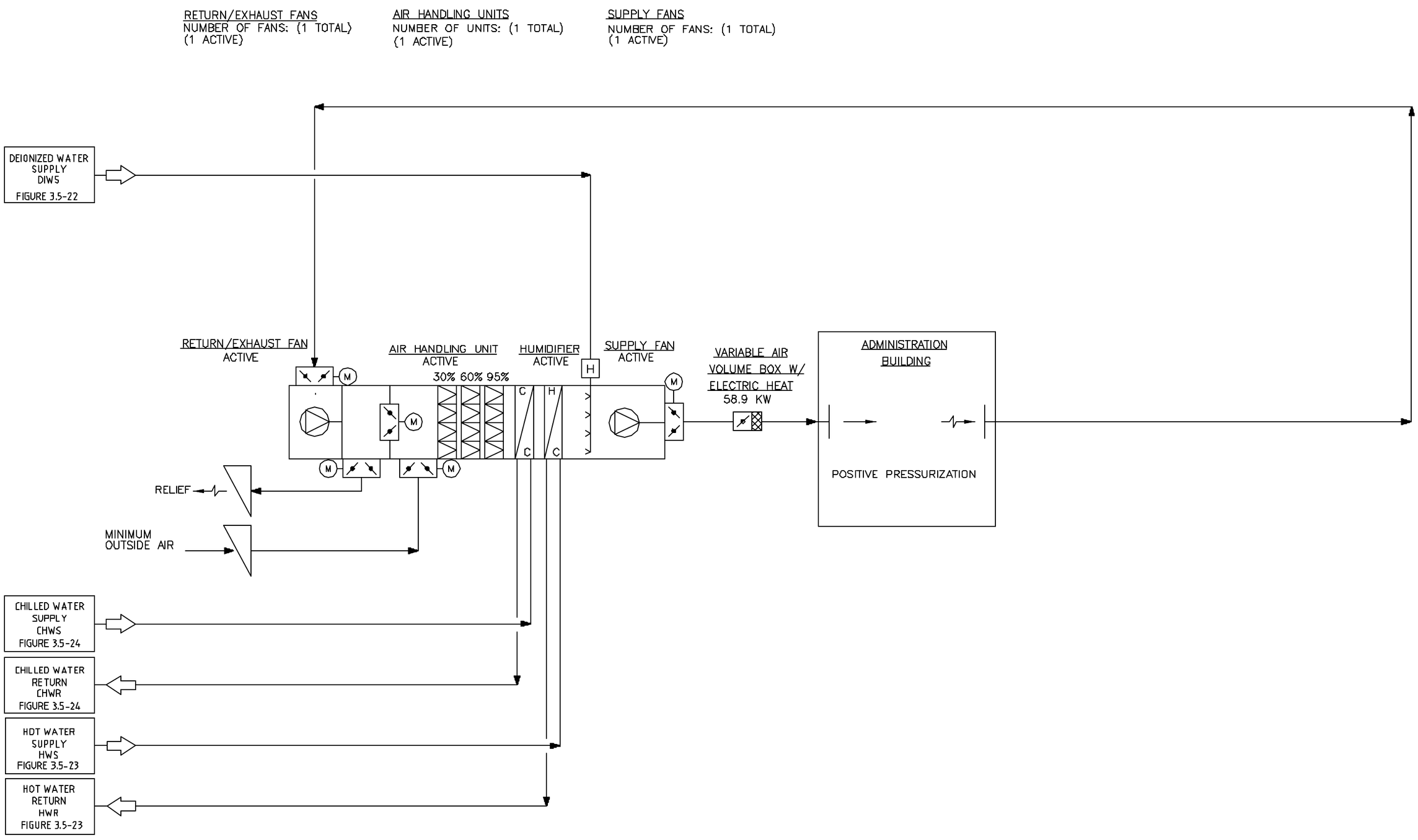

LOCKWOOD GREENE
ENGINEERING & CONSTRUCTION

REFERENCE NUMBER
1700-H-1000

FIGURE 3.5-17

FLOW DIAGRAM
ADMINISTRATION BUILDING
HVAC SYSTEM

REVISION DATE: DECEMBER 2003

ELECTRICAL ROOM AIR HANDLING UNITS
NUMBER OF UNITS: 2 (TOTAL)
(2 ACTIVE)

ELECTRICAL ROOM SUPPLY FANS
NUMBER OF FANS: 2 (TOTAL)
(2 ACTIVE)

ELECTRICAL ROOM EXHAUST / RETURN FANS
NUMBER OF FANS: 2 (TOTAL)
(2 ACTIVE)

MECHANICAL ROOM AIR HANDLING UNITS
NUMBER OF UNITS: 2 (TOTAL)
(2 ACTIVE)

MECHANICAL ROOM SUPPLY FANS
NUMBER OF FANS: 2 (TOTAL)
(2 ACTIVE)

AIR COMPRESSOR ROOM EXHAUST FAN
NUMBER OF FANS: 1
VENT TO ATMOSPHERE

GENERATOR ROOM EXHAUST FAN
NUMBER OF FANS: 2
VENT TO ATMOSPHERE

BOILER ROOM EXHAUST FAN
NUMBER OF FANS: 1
VENT TO ATMOSPHERE

CHILLER EMERGENCY ROOM EXHAUST FAN
NUMBER OF FANS: 1
VENT TO ATMOSPHERE

COOLING WATER FACILITY EXHAUST FAN
NUMBER OF FANS: 1
VENT TO ATMOSPHERE

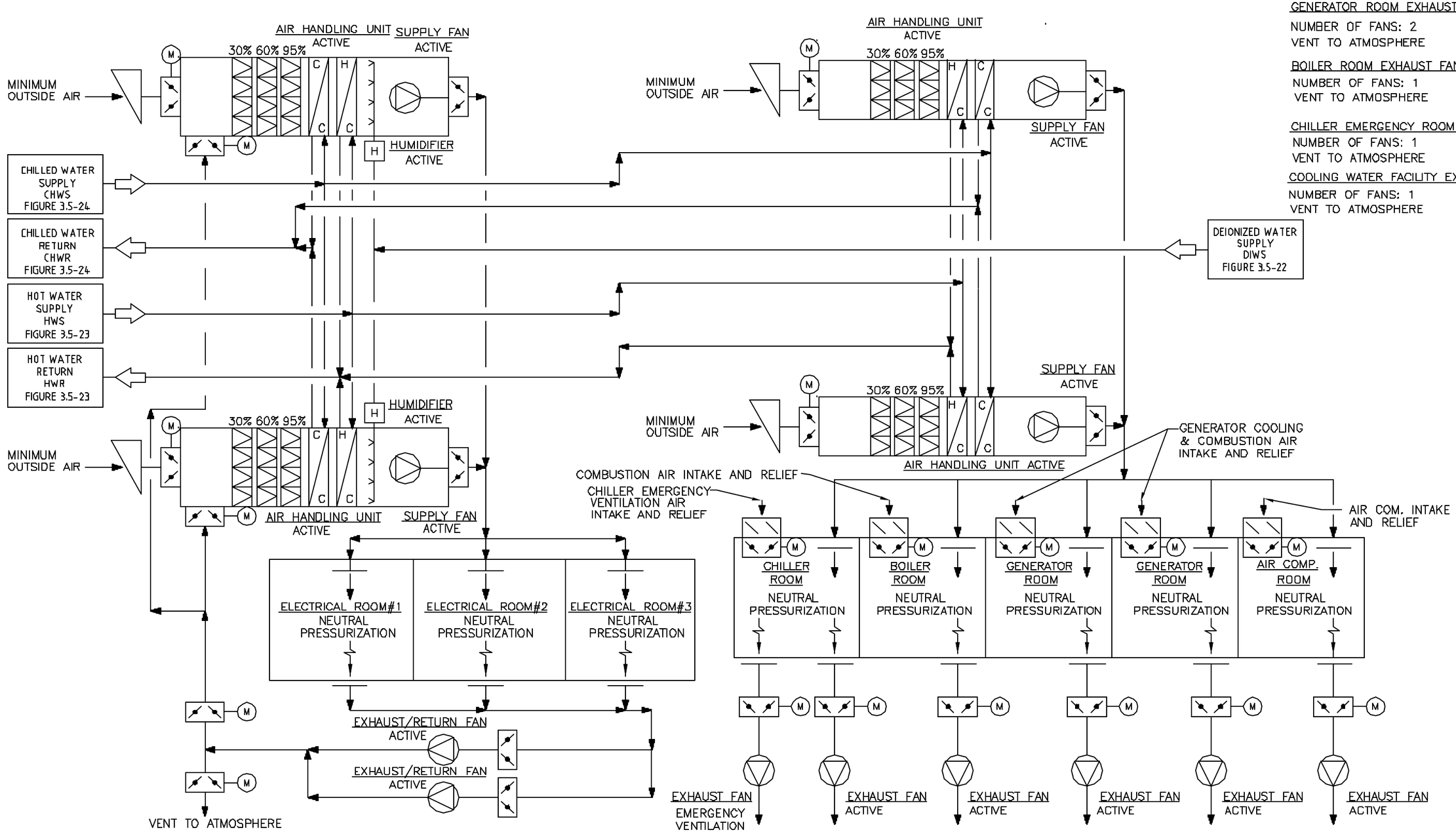

LOCKWOOD GREENE ENGINEERING & CONSTRUCTION

REFERENCE NUMBER
1600-H-1000

FIGURE 3.5-18

PROCESS FLOW DIAGRAM
CENTRAL UTILITIES BUILDING
HVAC SYSTEM

REVISION DATE: DECEMBER 2003

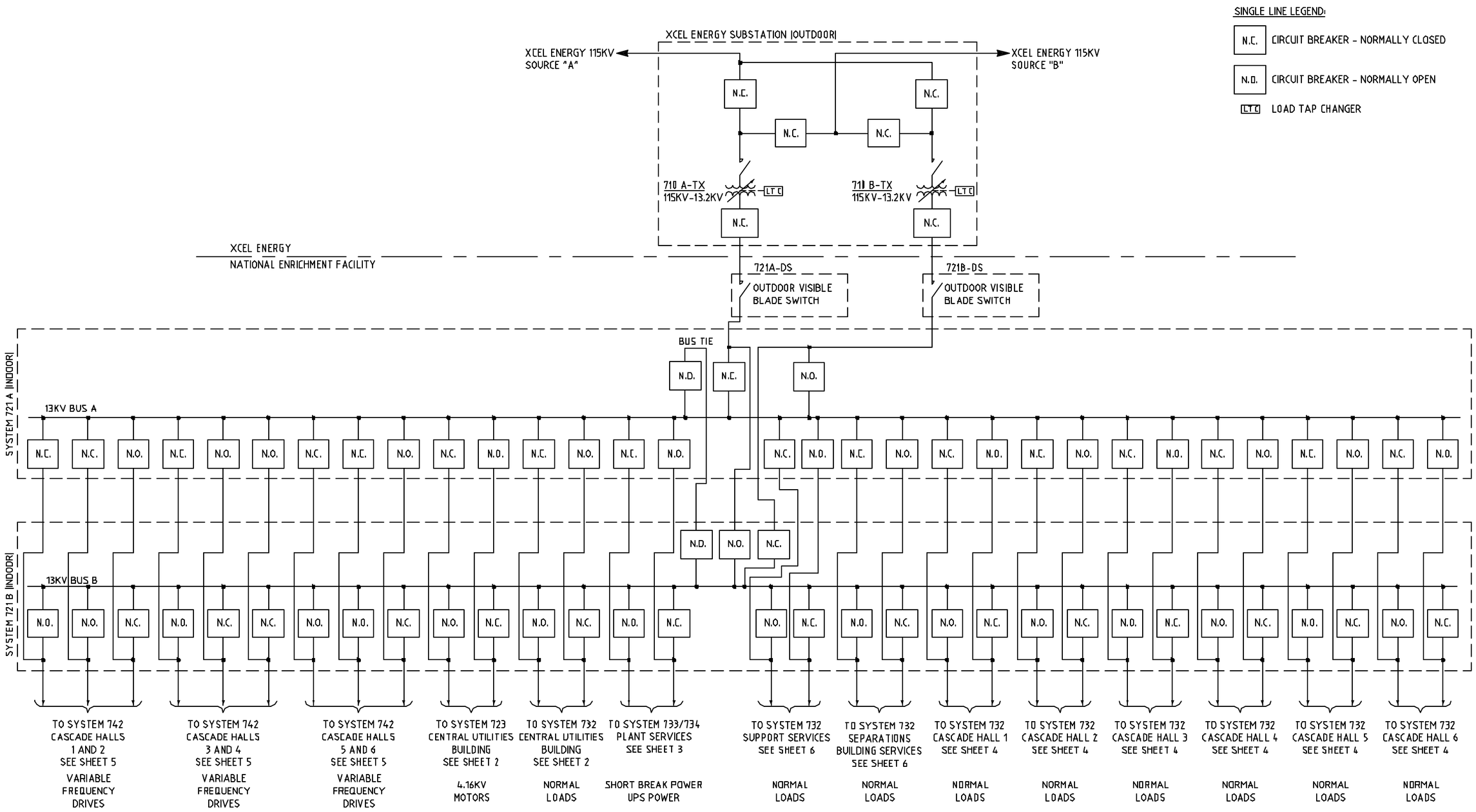

SHEET 1 OF 6

LOCKWOOD GREENE
ENGINEERING & CONSTRUCTION

REFERENCE NUMBER
0000E5001

FIGURE 3.5-19

ELECTRICAL SINGLE LINE DIAGRAM
OVERALL SYSTEM
UTILITY SUBSTATION & 13KV DISTRIBUTION

REVISION DATE: DECEMBER 2003

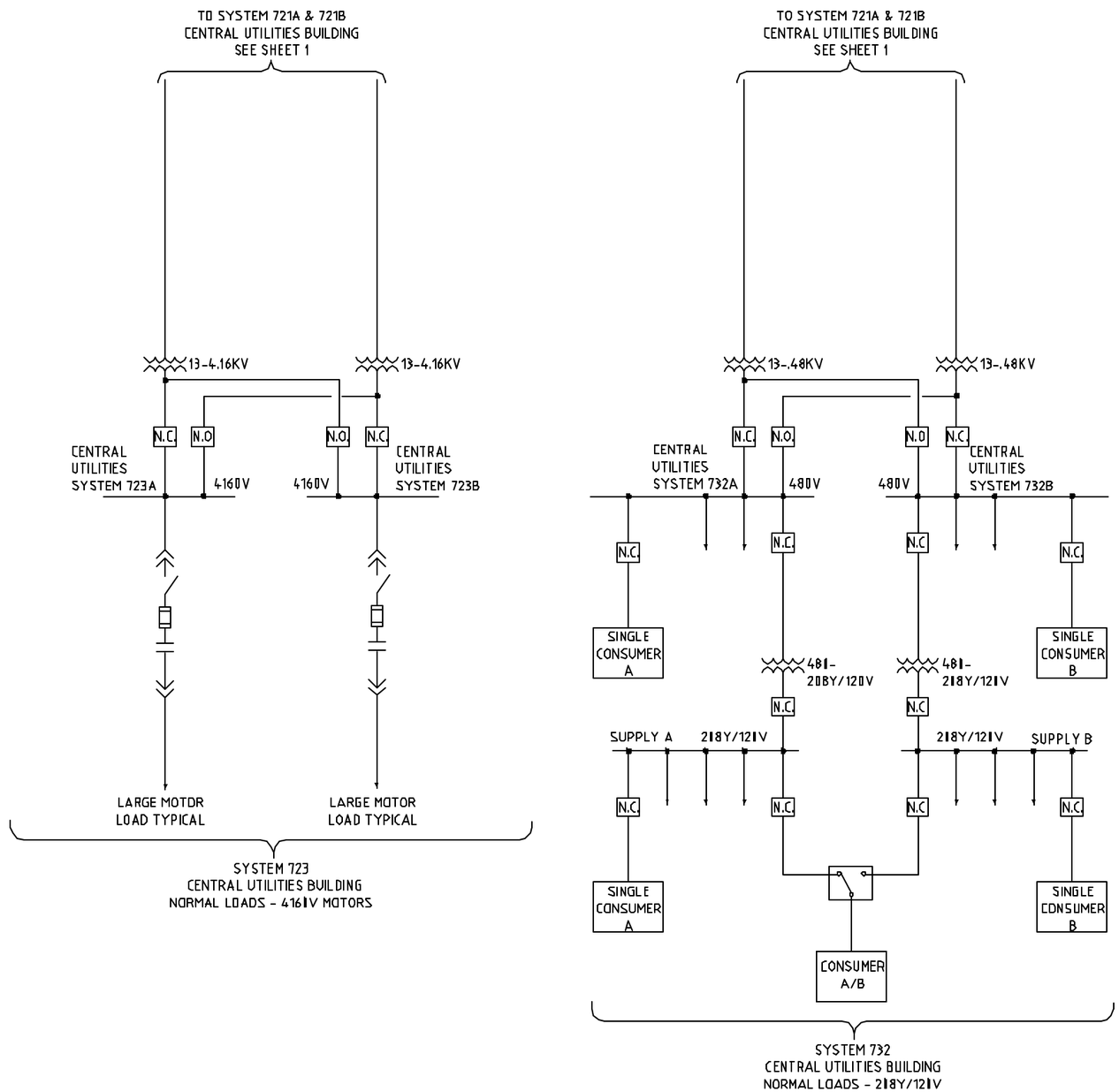

SINGLE LINE LEGEND:

N.C. CIRCUIT BREAKER - NORMALLY CLOSED

N.O. CIRCUIT BREAKER - NORMALLY OPEN

TRANSFER SWITCH

SHEET 2 OF 6

LOCKWOOD GREENE
ENGINEERING & CONSTRUCTION

REFERENCE NUMBER
0000E5002

FIGURE 3.5-19

ELECTRICAL SINGLE LINE DIAGRAM
OVERALL SYSTEM
CENTRAL UTILITIES NORMAL LOADS

REVISION DATE: DECEMBER 2003

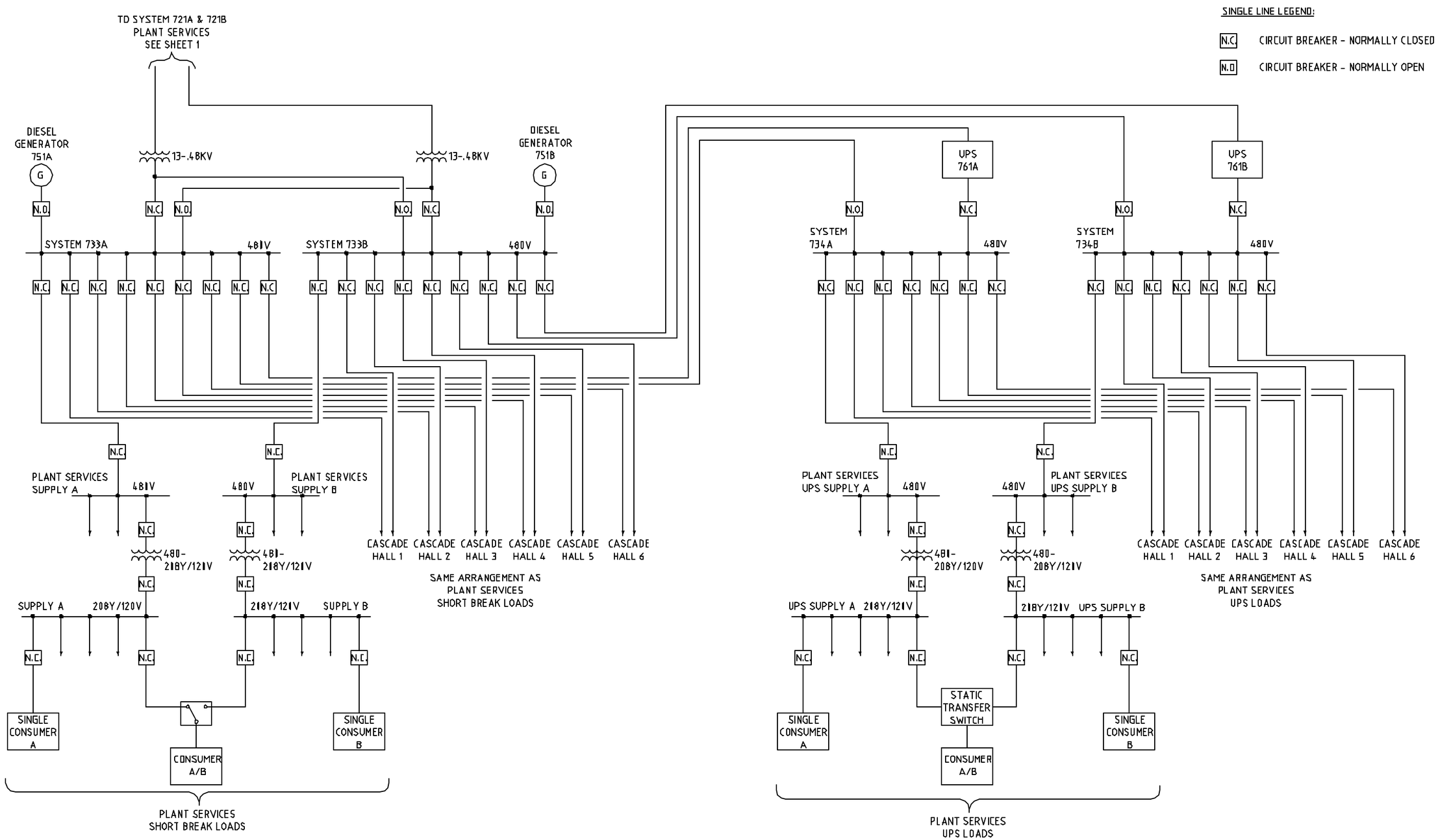

SHEET 3 OF 6

LOCKWOOD GREENE
ENGINEERING & CONSTRUCTION

REFERENCE NUMBER
0000E5003

FIGURE 3.5-19

ELECTRICAL SINGLE LINE DIAGRAM
OVERALL SYSTEM
SHORT BREAK & UPS POWER

REVISION DATE: DECEMBER 2003

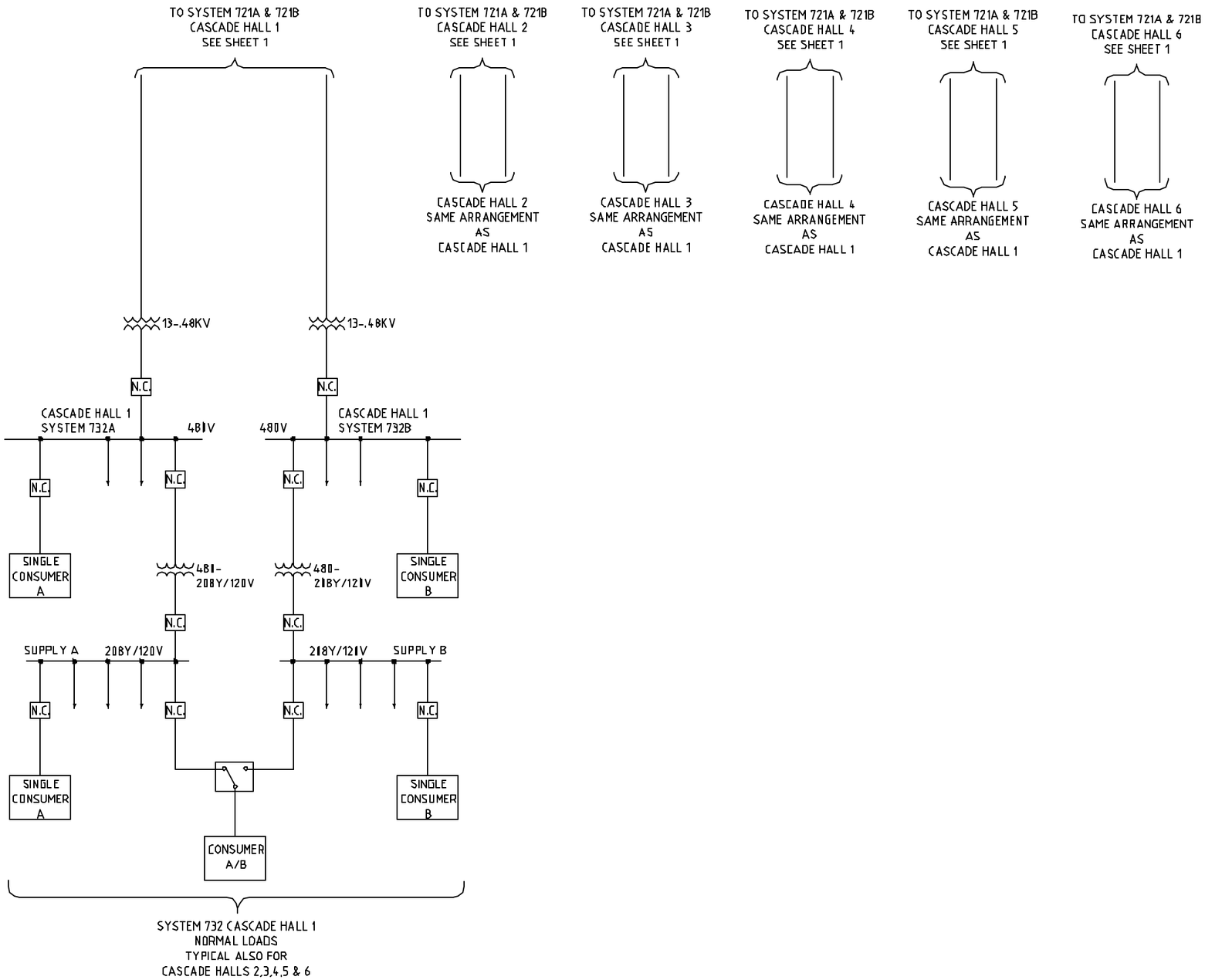

SINGLE LINE LEGEND:

N.C. CIRCUIT BREAKER - NORMALLY CLOSED

N.O. CIRCUIT BREAKER - NORMALLY OPEN

TRANSFER SWITCH

SHEET 4 OF 6

LOCKWOOD GREENE
ENGINEERING & CONSTRUCTION

REFERENCE NUMBER
0000E5004

FIGURE 3.5-19

ELECTRICAL SINGLE LINE DIAGRAM
OVERALL SYSTEM
NORMAL LOADS

REVISION DATE: DECEMBER 2003

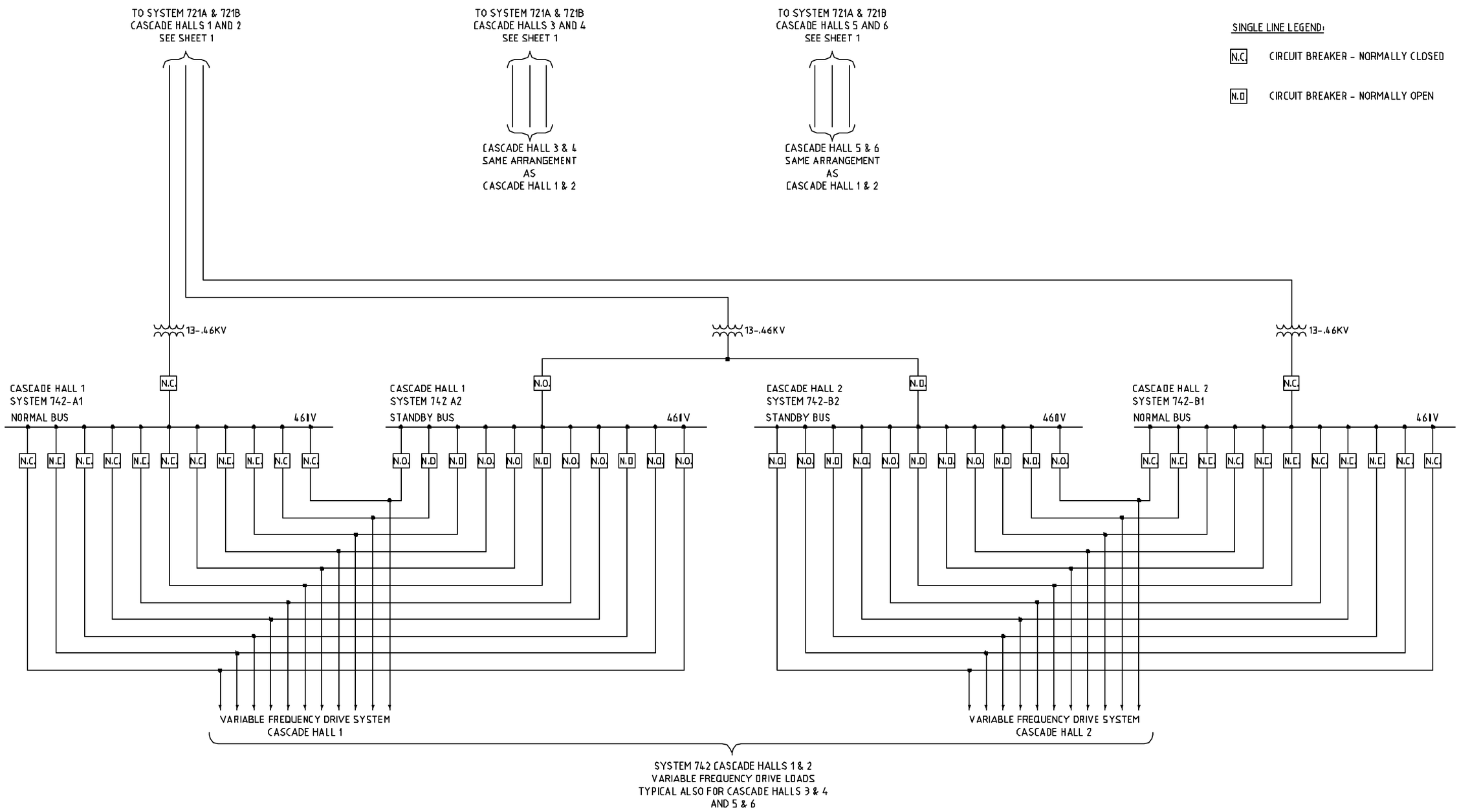

SHEET 5 OF 6

LOCKWOOD GREENE
ENGINEERING & CONSTRUCTION

REFERENCE NUMBER
0000E5005

FIGURE 3.5-19

ELECTRICAL SINGLE LINE DIAGRAM
OVERALL SYSTEM
CASCADE HALL – VARIABLE FREQUENCY DRIVES

REVISION DATE: DECEMBER 2003

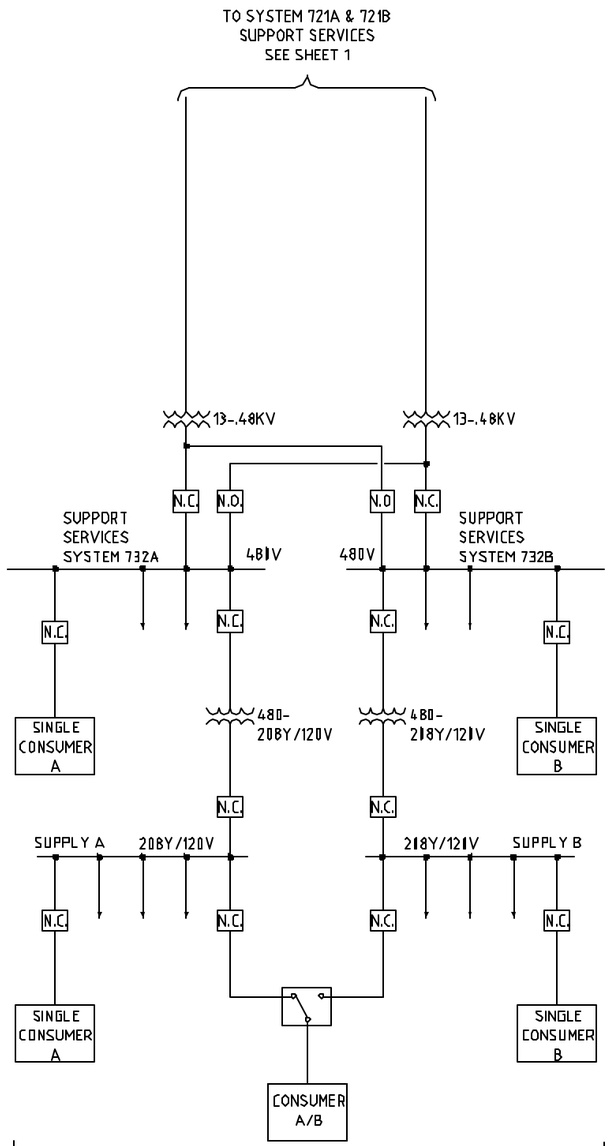

SYSTEM 732
SUPPORT SERVICES
NORMAL LOADS

ADMINISTRATION BUILDING, TECHNICAL SERVICES BUILDING, CENTRIFUGE ASSEMBLY BUILDING, CYLINDER RECEIPT AND DISPATCH BUILDING, BLENDING AND LIQUID SAMPLING AREA

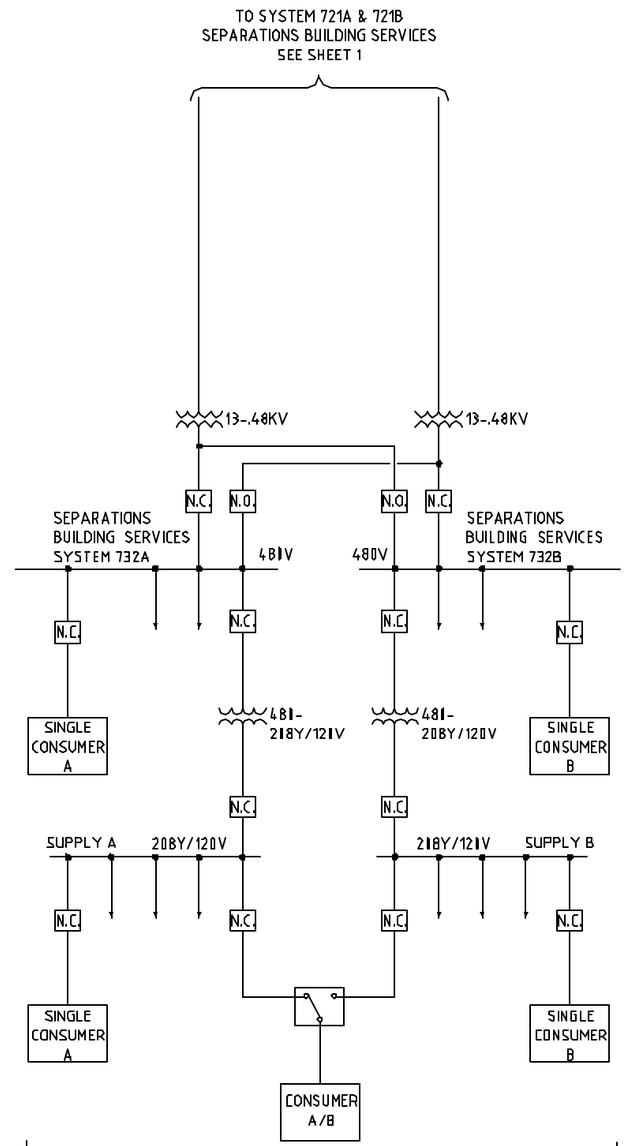

SYSTEM 732
SEPARATIONS
BUILDING SERVICES
NORMAL LOADS

CASCADE HALLS 1 - 6

SINGLE LINE LEGEND:

N.C. CIRCUIT BREAKER - NORMALLY CLOSED

N.O. CIRCUIT BREAKER - NORMALLY OPEN

TRANSFER SWITCH

SHEET 6 OF 6

LOCKWOOD GREENE
ENGINEERING & CONSTRUCTION

REFERENCE NUMBER
0000E5006

FIGURE 3.5-19

ELECTRICAL SINGLE LINE DIAGRAM
OVERALL SYSTEM
SERVICES – NORMAL LOADS

REVISION DATE: DECEMBER 2003

NOTES:

1. FLOWRATES, SET POINTS, DUCT OR LINE SIZES ARE PRELIMINARY. ACTUAL QUANTITIES, VALUES, AND SIZES WILL BE ESTABLISHED DURING THE DESIGN PHASE IN ACCORDANCE WITH U.S. STANDARDS.

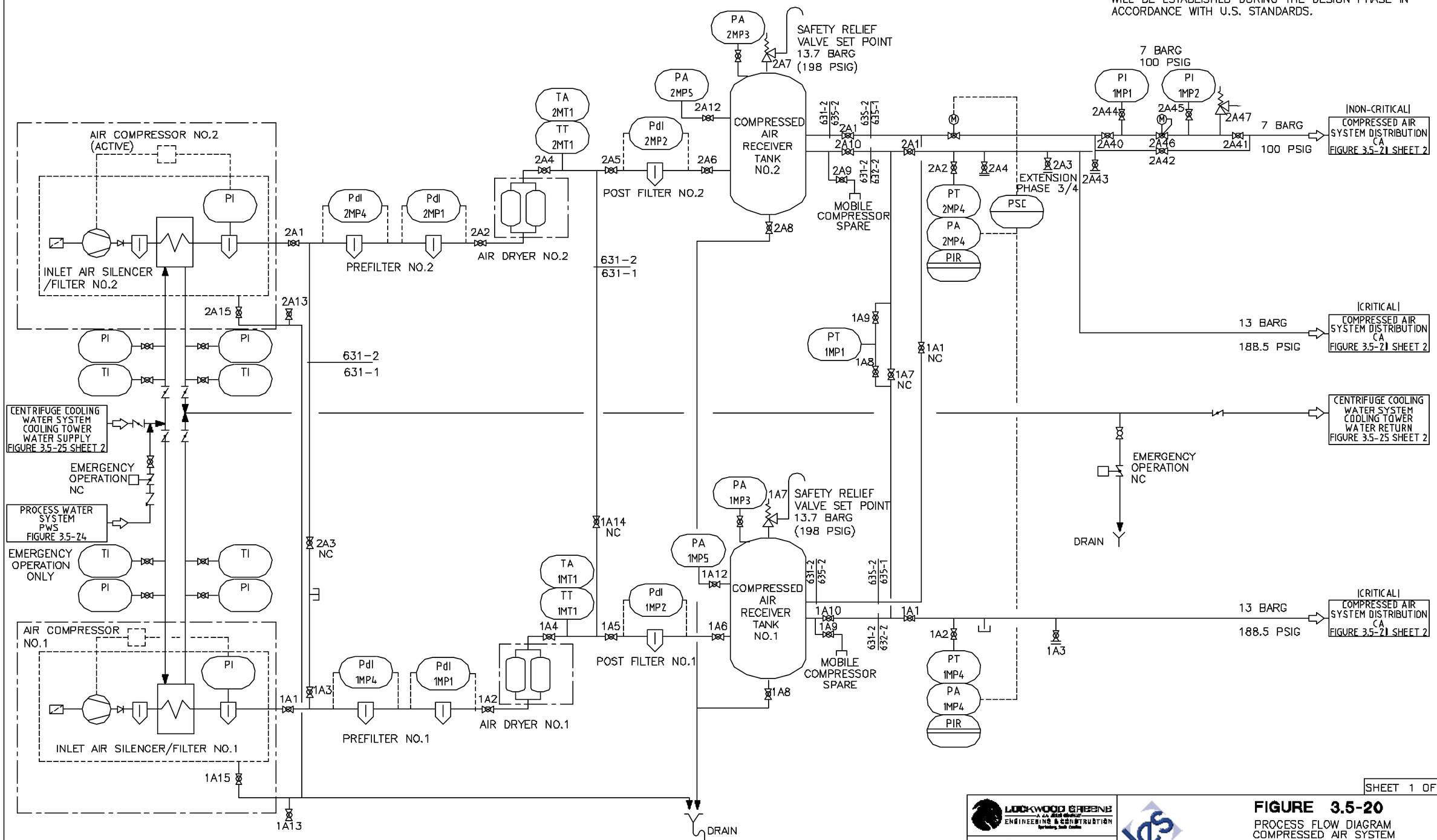

SHEET 1 OF 2

LOCKWOOD GREENE ENGINEERING & CONSTRUCTION

REFERENCE NUMBER 0630-M-1100

FIGURE 3.5-20

PROCESS FLOW DIAGRAM COMPRESSED AIR SYSTEM

REVISION DATE: DECEMBER 2003

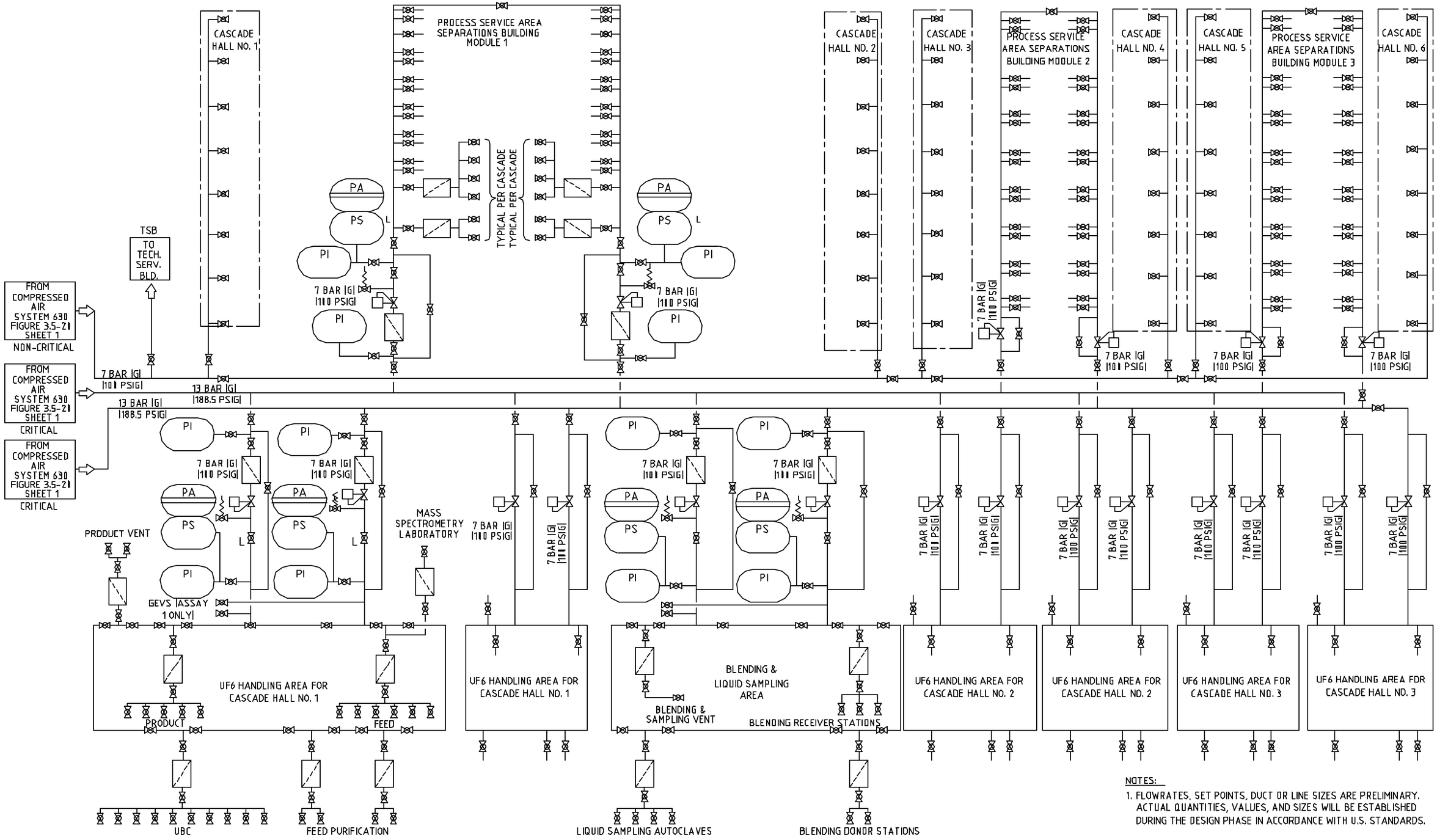

NOTES:

1. FLOWRATES, SET POINTS, DUCT OR LINE SIZES ARE PRELIMINARY. ACTUAL QUANTITIES, VALUES, AND SIZES WILL BE ESTABLISHED DURING THE DESIGN PHASE IN ACCORDANCE WITH U.S. STANDARDS.

SHEET 2 OF 2

LOCKWOOD GREENE ENGINEERING & CONSTRUCTION

REFERENCE NUMBER
0630-M-1101

FIGURE 3.5-20
PROCESS FLOW DIAGRAM
COMPRESSED AIR DISTRIBUTION

REVISION DATE: DECEMBER 2003

PROCESS WATER PUMPS
NUMBER OF PUMPS: 2
(1 ACTIVE, 1 STANDBY)

NOTES:

1. FLOWRATES, DUCT, SETPOINTS OR LINE SIZES ARE PRELIMINARY. ACTUAL QUANTITIES, VALUES AND SIZES WILL BE ESTABLISHED DURING THE DESIGN PHASE IN ACCORDANCE WITH U.S. STANDARDS.

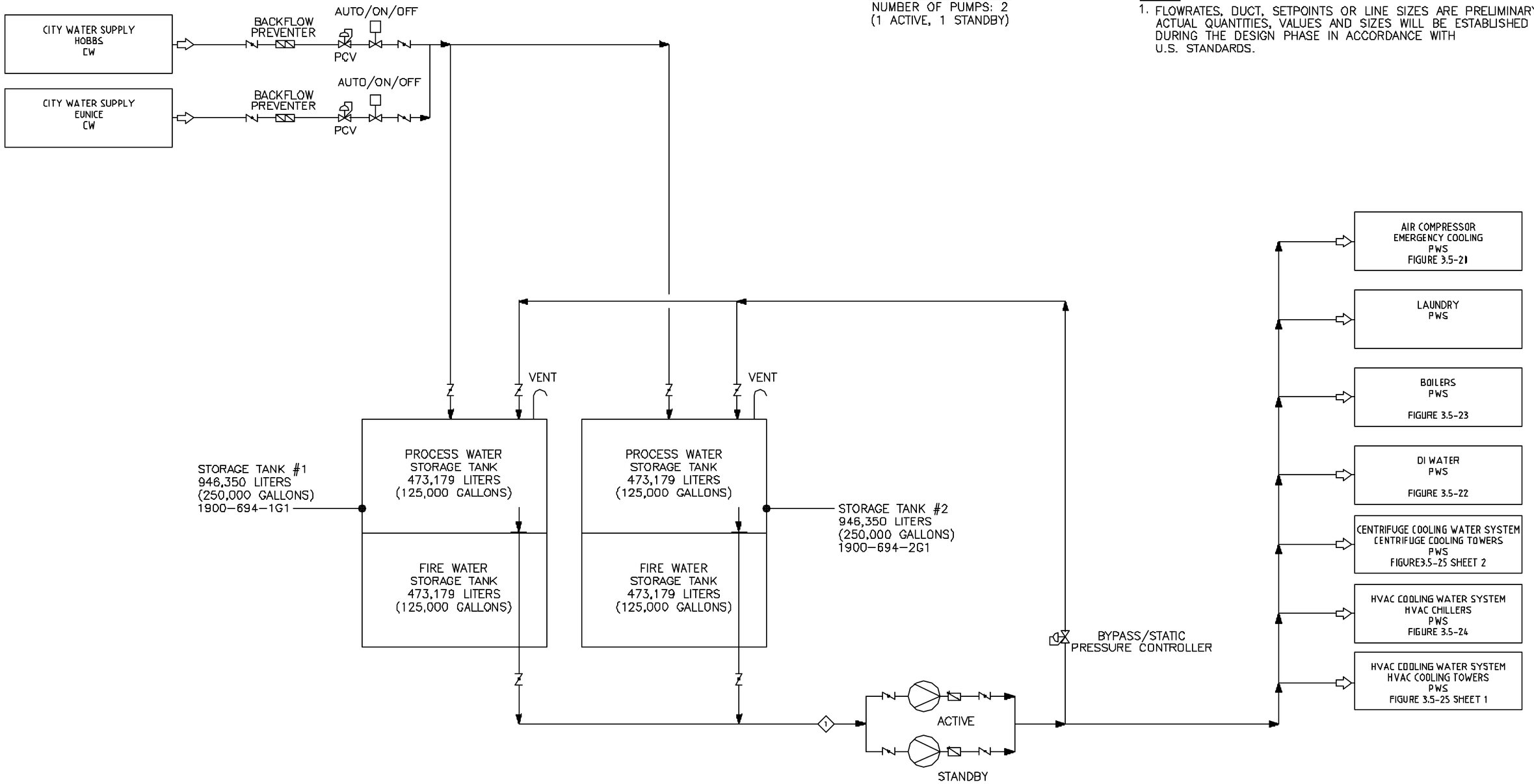

LOCKWOOD GREENE
ENGINEERING & CONSTRUCTION

REFERENCE NUMBER
0000-M-3005

FIGURE 3.5-21
PROCESS FLOW DIAGRAM
PROCESS WATER
DISTRIBUTION SYSTEM
REVISION DATE: DECEMBER 2003

NOTES:

1. FLOWRATES, DUCT, SETPOINTS OR LINE SIZES ARE PRELIMINARY. ACTUAL QUANTITIES, VALUES AND SIZES WILL BE ESTABLISHED DURING THE DESIGN PHASE IN ACCORDANCE WITH U.S. STANDARDS.

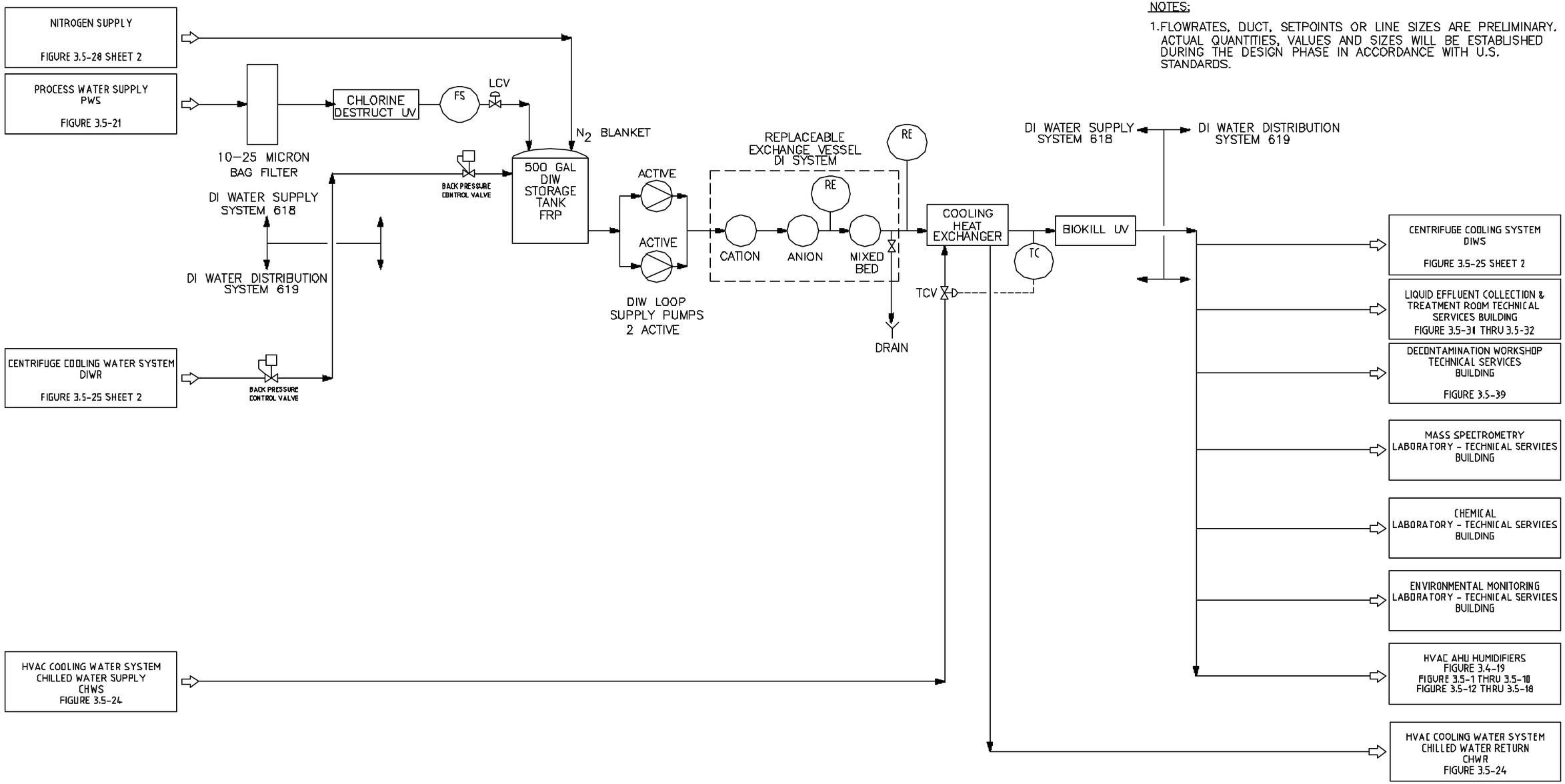

LOCKWOOD GREENE ENGINEERING & CONSTRUCTION

REFERENCE NUMBER
0618–M–1100

FIGURE 3.5-22

PROCESS FLOW DIAGRAM
DI WATER SUPPLY AND DISTRIBUTION SYSTEM

REVISION DATE: DECEMBER 2003

NOTES:

1. FLOWRATES, DUCT, SETPOINTS OR LINE SIZES ARE PRELIMINA ACTUAL QUANTITIES, VALUES AND SIZES WILL BE ESTABLISHE DURING THE DESIGN PHASE IN ACCORDANCE WITH U.S. STANDARDS.

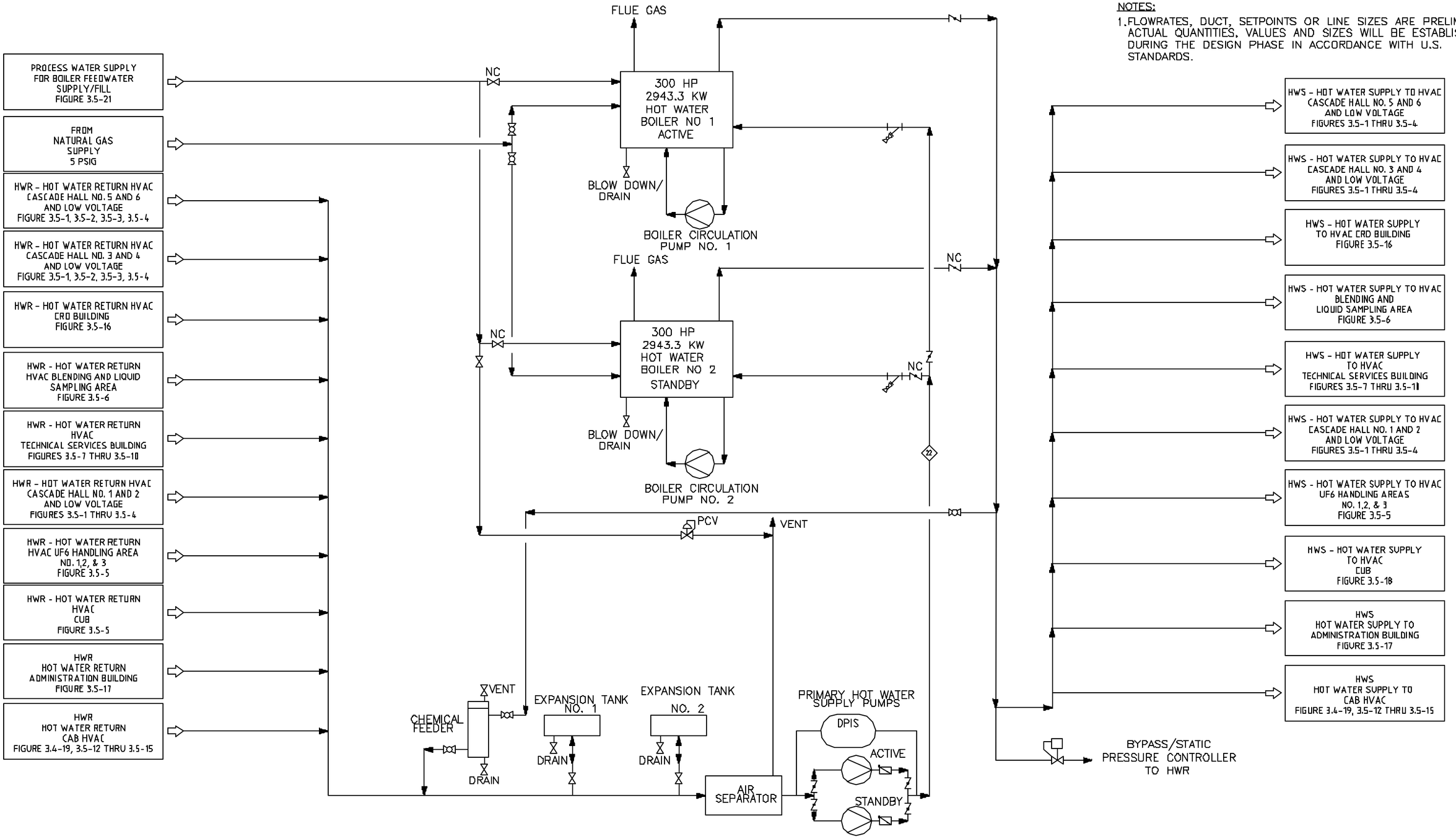

LOCKWOOD GREENE ENGINEERING & CONSTRUCTION

REFERENCE NUMBER

0650-M-1100

FIGURE 3.5-23

PROCESS FLOW DIAGRAM BOILERS AND HOT WATER DISTRIBUTION SYSTEM

REVISION DATE: DECEMBER 2003

NOTES:

1. FLOWRATES, SETPOINTS, DUCT OR LINE SIZES ARE PRELIMINARY. ACTUAL QUANTITIES, VALUES AND SIZES WILL BE ESTABLISHED DURING THE DESIGN PHASE IN ACCORDANCE WITH U.S. STANDARDS.

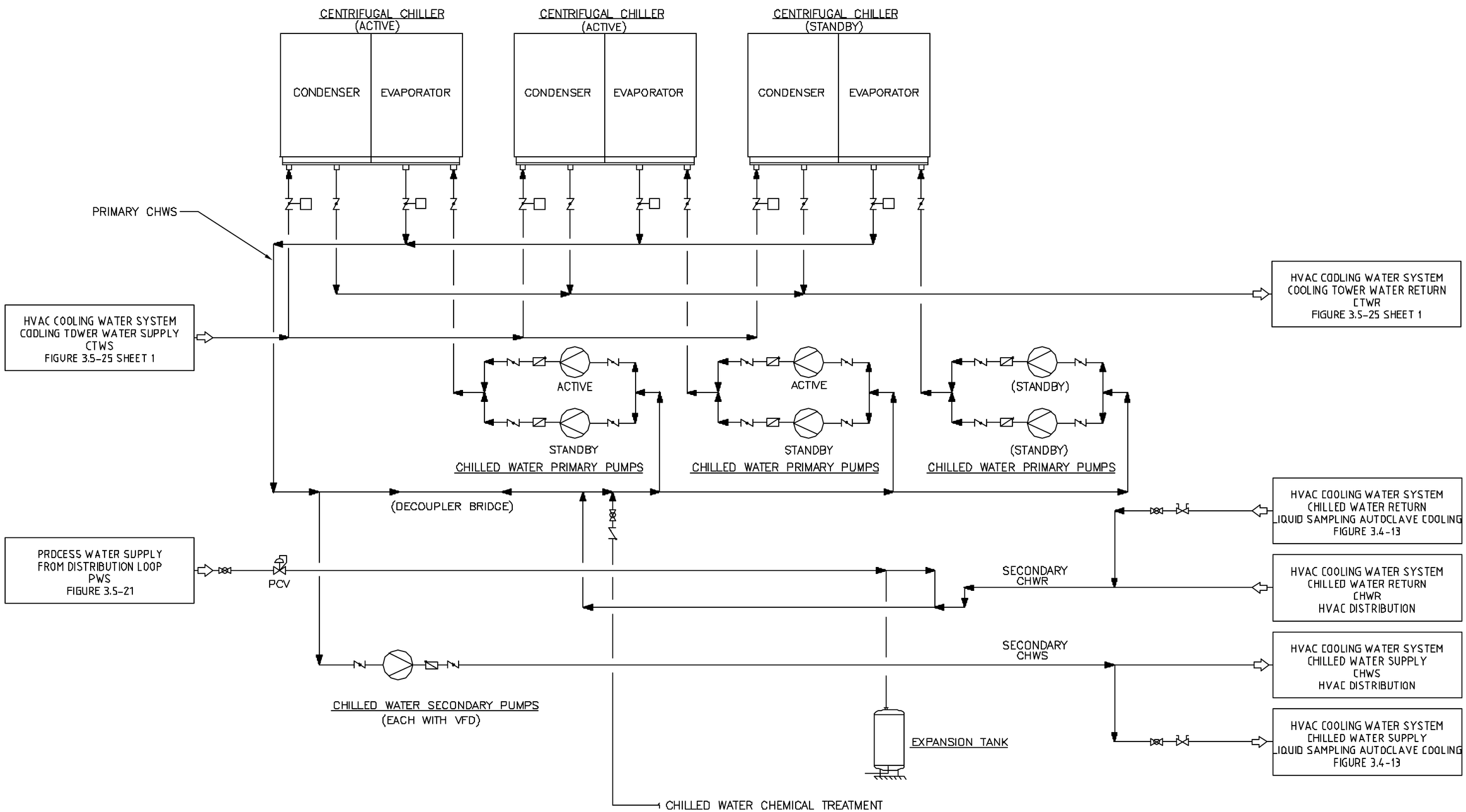

LOCKWOOD GREENE ENGINEERING & CONSTRUCTION

REFERENCE NUMBER 0611-M-1101

FIGURE 3.5-24

PROCESS FLOW DIAGRAM
HVAC COOLING WATER SYSTEM
CHILLERS/PUMPS

REVISION DATE: DECEMBER 2003

NOTES:

1. FLOWRATES, SETPOINTS, DUCT OR LINE SIZES ARE PRELIMINARY. ACTUAL QUANTITIES, VALUES AND SIZES WILL BE ESTABLISHED DURING THE DESIGN PHASE IN ACCORDANCE WITH U.S. STANDARDS.

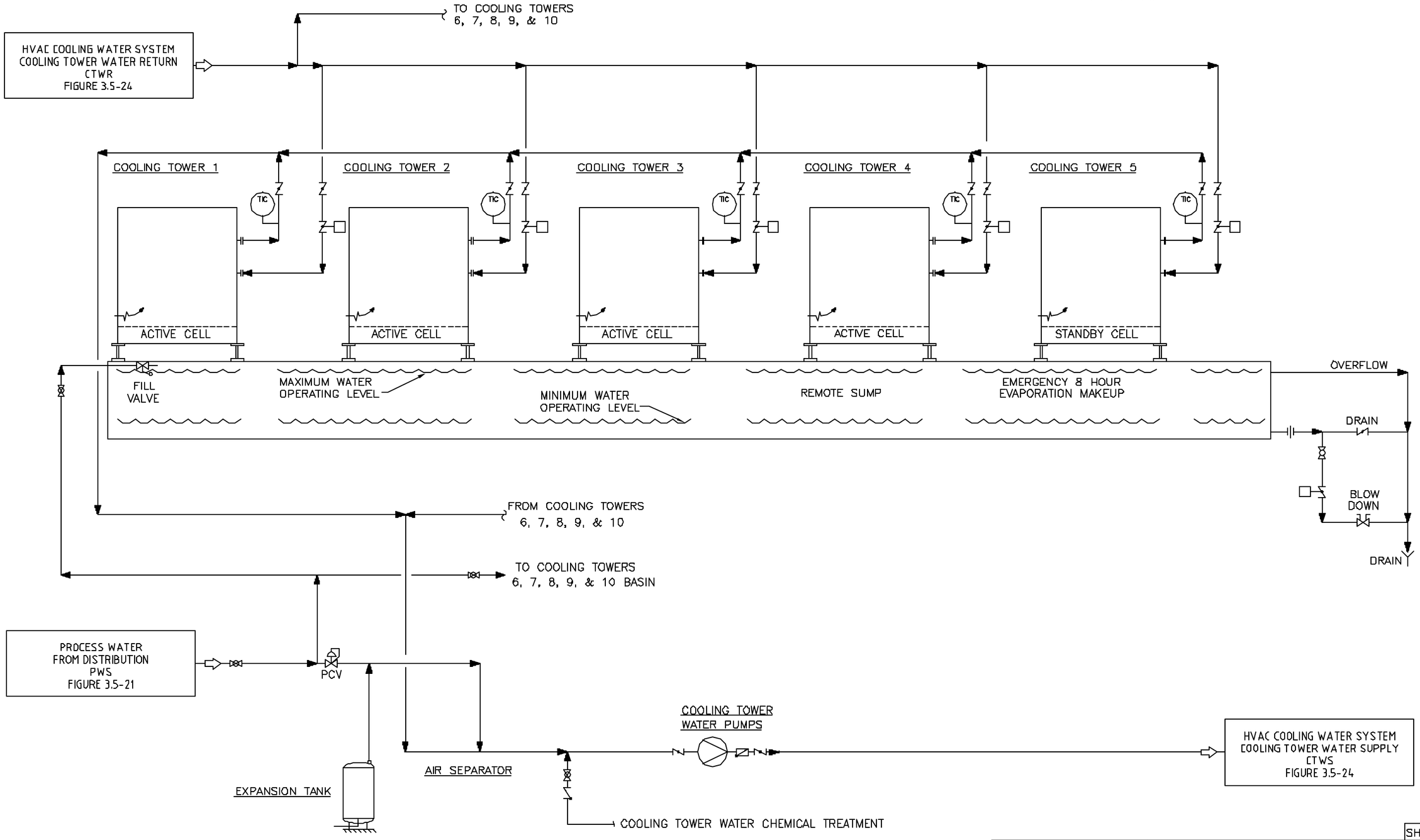

SHEET 1 OF 2

LOCKWOOD GREENE
ENGINEERING & CONSTRUCTION

REFERENCE NUMBER
0611-M-1100

FIGURE 3.5-25

PROCESS FLOW DIAGRAM
HVAC COOLING TOWER WATER SYSTEM
COOLING TOWERS AND PUMPS

REVISION DATE: DECEMBER 2003

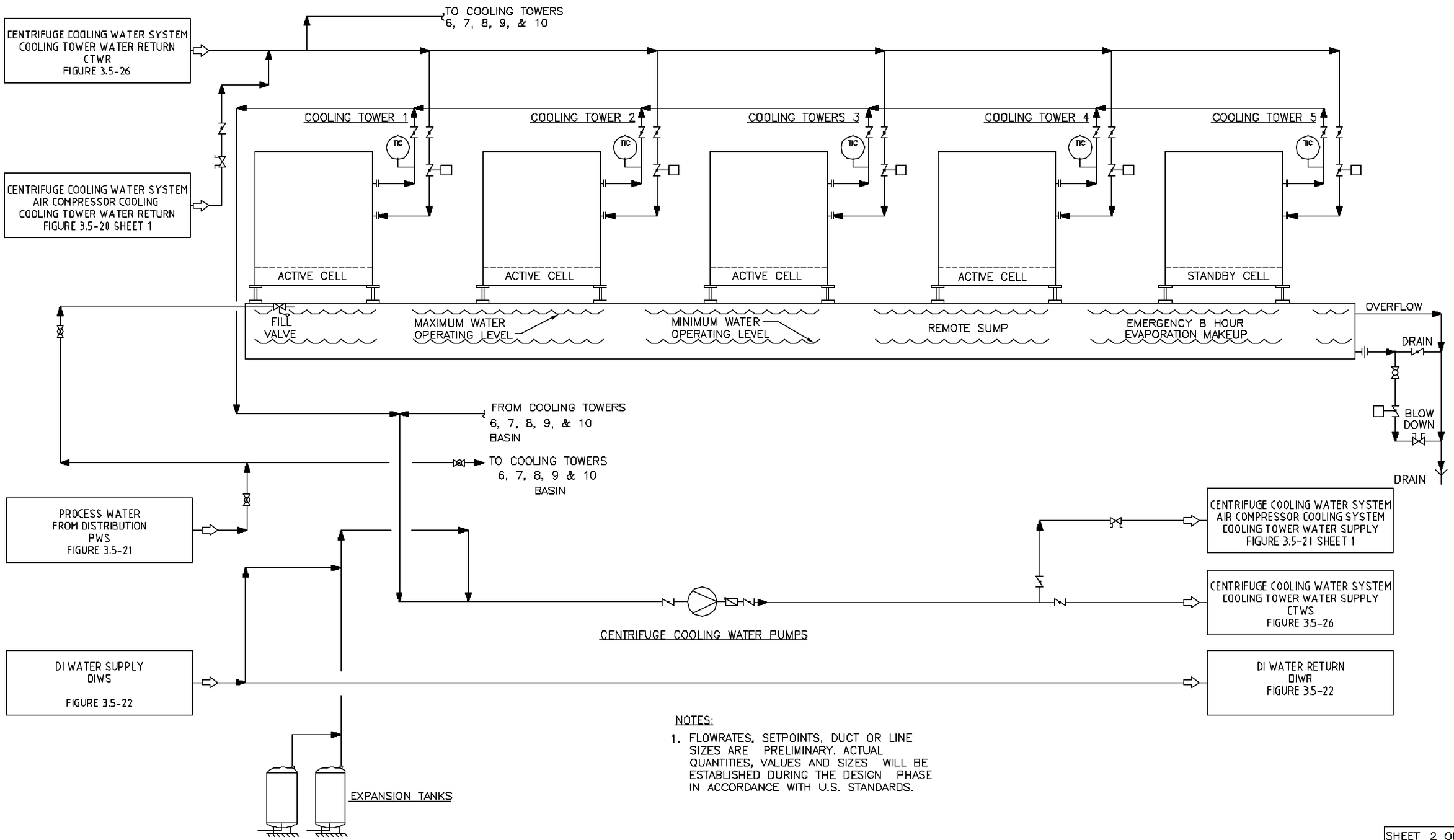

NOTES:

1. FLOWRATES, SETPOINTS, DUCT OR LINE SIZES ARE PRELIMINARY. ACTUAL QUANTITIES, VALUES AND SIZES WILL BE ESTABLISHED DURING THE DESIGN PHASE IN ACCORDANCE WITH U.S. STANDARDS.

SHEET 2 OF 2

LOCKWOOD GREENE
ENGINEERING & CONSTRUCTION

REFERENCE NUMBER
0611-M-1102

FIGURE 3.5-25

PROCESS FLOW DIAGRAM
CENTRIFUGE COOLING WATER SYSTEM
COOLING TOWERS AND PUMPS

REVISION DATE: DECEMBER 2003

NOTES:

1. FLOWRATES, SETPOINTS, DUCT OR LINE SIZES ARE PRELIMINARY. ACTUAL QUANTITIES, VALUES AND SIZES WILL BE ESTABLISHED DURING THE DESIGN PHASE IN ACCORDANCE WITH U.S. STANDARDS.

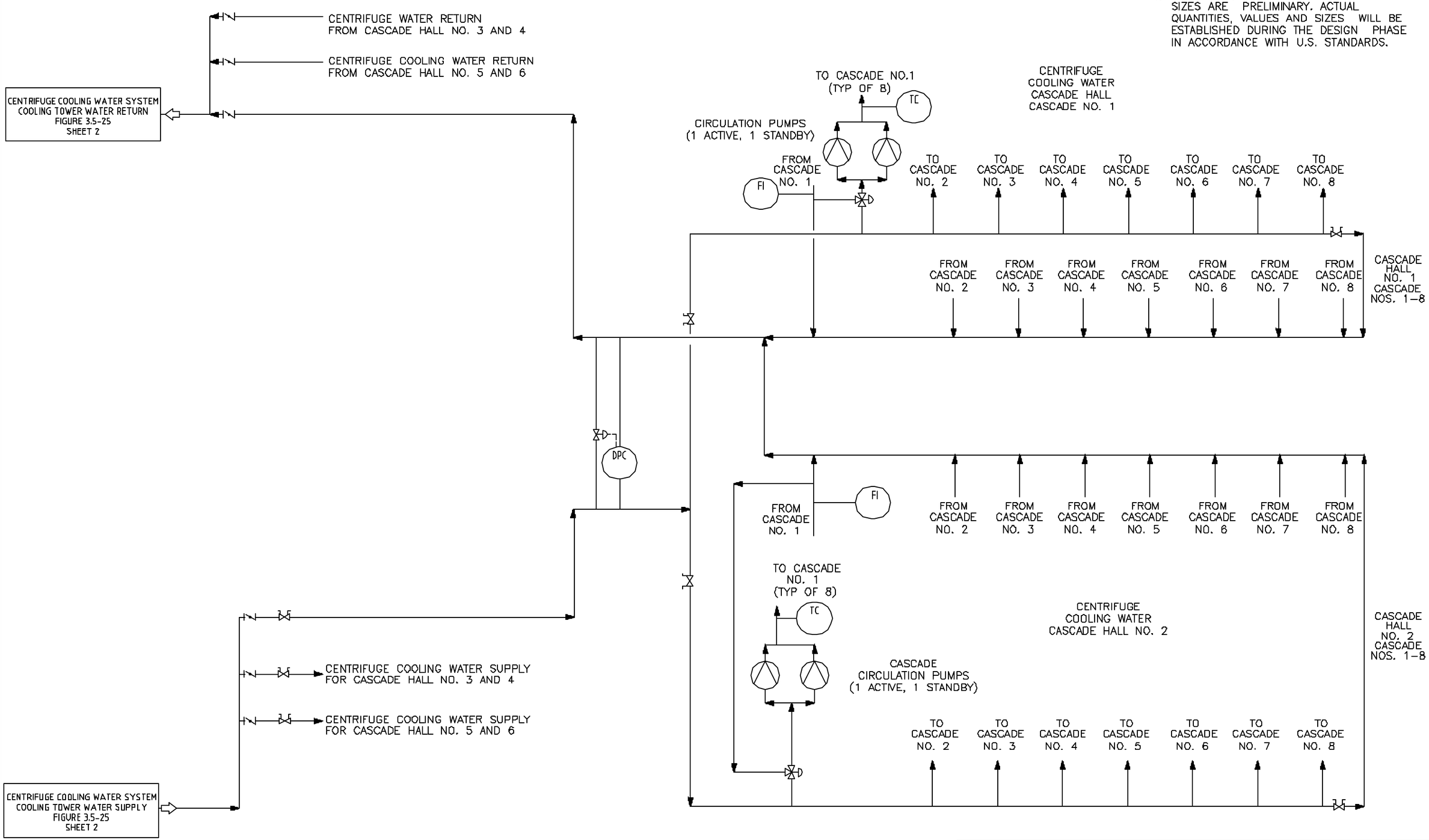

LOCKWOOD GREENE ENGINEERING & CONSTRUCTION

REFERENCE NUMBER 0616–M–1100

FIGURE 3.5-26

PROCESS FLOW DIAGRAM CENTRIFUGE COOLING WATER DISTRIBUTION SYSTEM

REVISION DATE: DECEMBER 2003

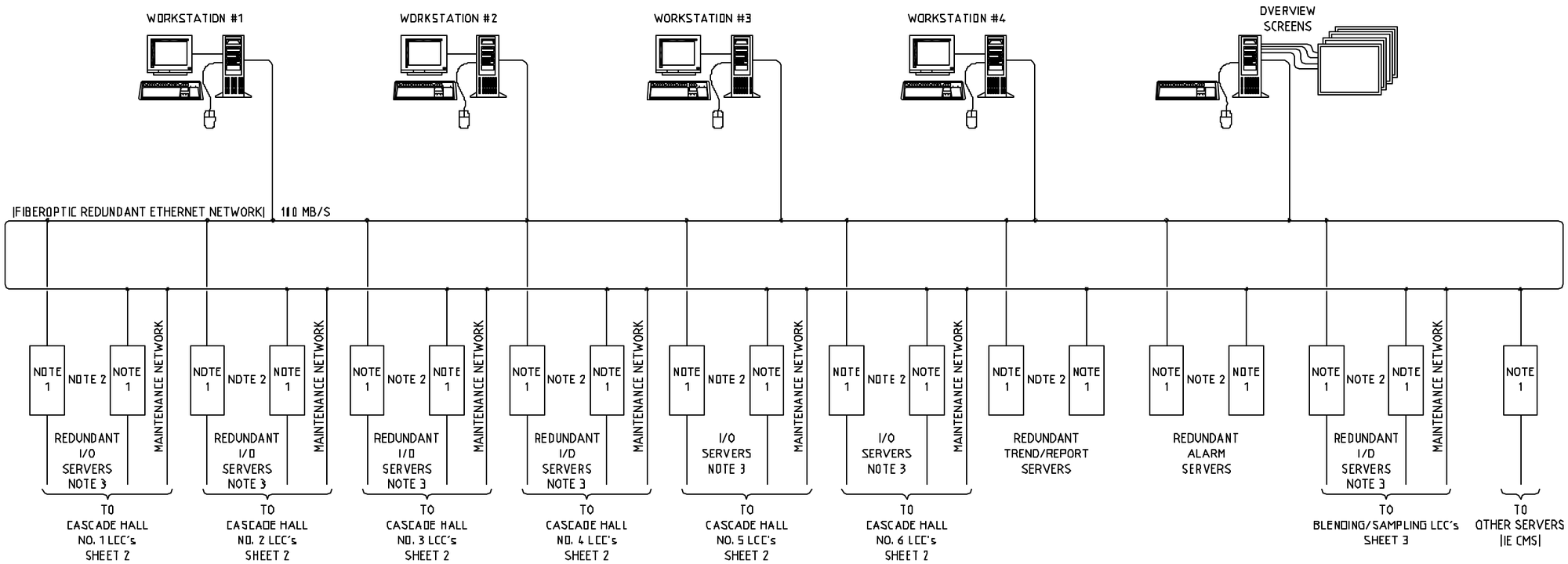

NOTES

1. EACH SERVER CONSISTS OF PC, POWER SUPPLY, AND NETWORK CABLE.
2. THERE IS NO DIRECT PEER TO PEER CONNECTION BETWEEN REDUNDANT SERVERS. WATCHDOG, PARITY CHECKS, ETC. ARE CARRIED THROUGH ETHERNET NETWORK AND ARE A FUNCTION OF SCADA SYSTEM.
3. PROCESS NETWORK PROTOCOL DEPENDANT ON PLC INSTALLATION.
4. REFERENCE TO SHEETS ON THIS FIGURE REFER TO FIGURE 3.5-27.

SHEET 1 OF 3

LOCKWOOD GREENE ENGINEERING & CONSTRUCTION

REFERENCE NUMBER 057010007

FIGURE 3.5-27

PLANT CONTROL SYSTEM
CENTRAL CONTROL SYSTEM

REVISION DATE: DECEMBER 2003

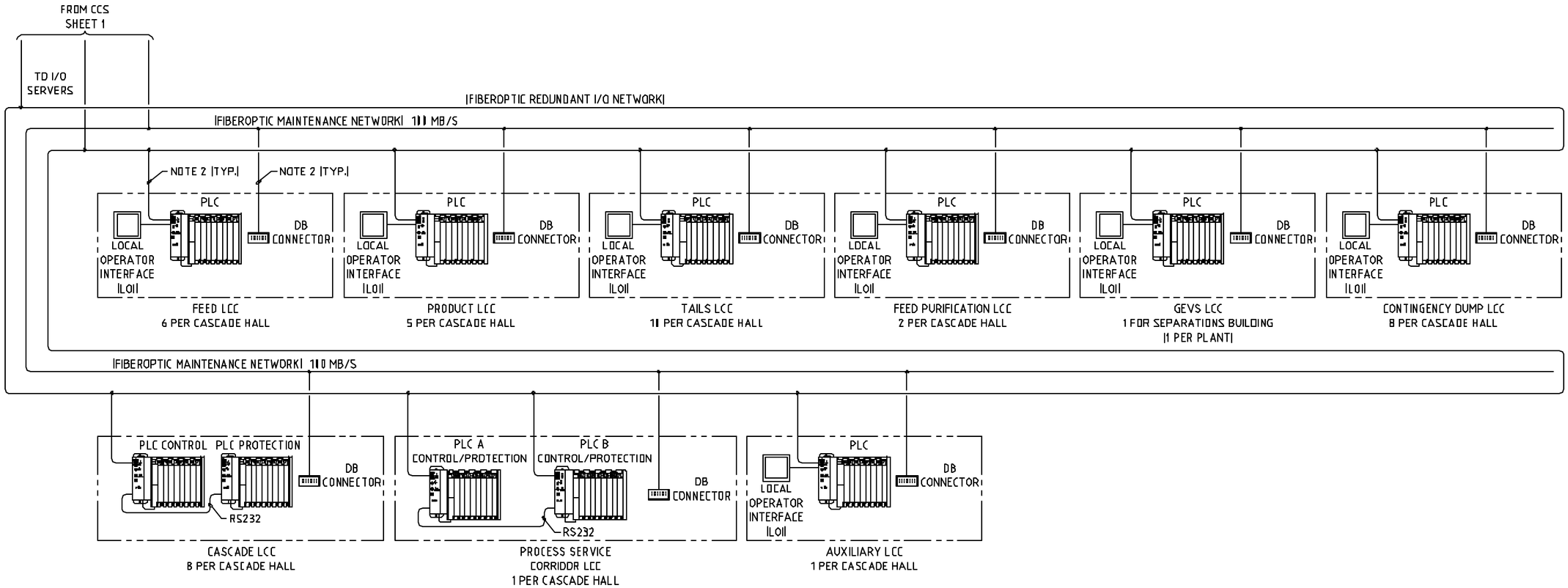

NOTES

1. THIS DRAWING IS TYPICAL FOR SIX ASSAYS.
2. CONNECTION OF PLC TO I/O AND MAINTENANCE NETWORKS ARE SUBJECT TO THE PLC MANUFACTURER'S STANDARDS.
3. REFERENCE TO SHEETS ON THIS FIGURE REFER TO FIGURE 3.5-27.

SHEET 2 OF 3

LOCKWOOD GREENE
ENGINEERING & CONSTRUCTION

REFERENCE NUMBER
057010008

FIGURE 3.5-27
PLANT CONTROL SYSTEM
LOCAL CONTROL SYSTEM

REVISION DATE: DECEMBER 2003

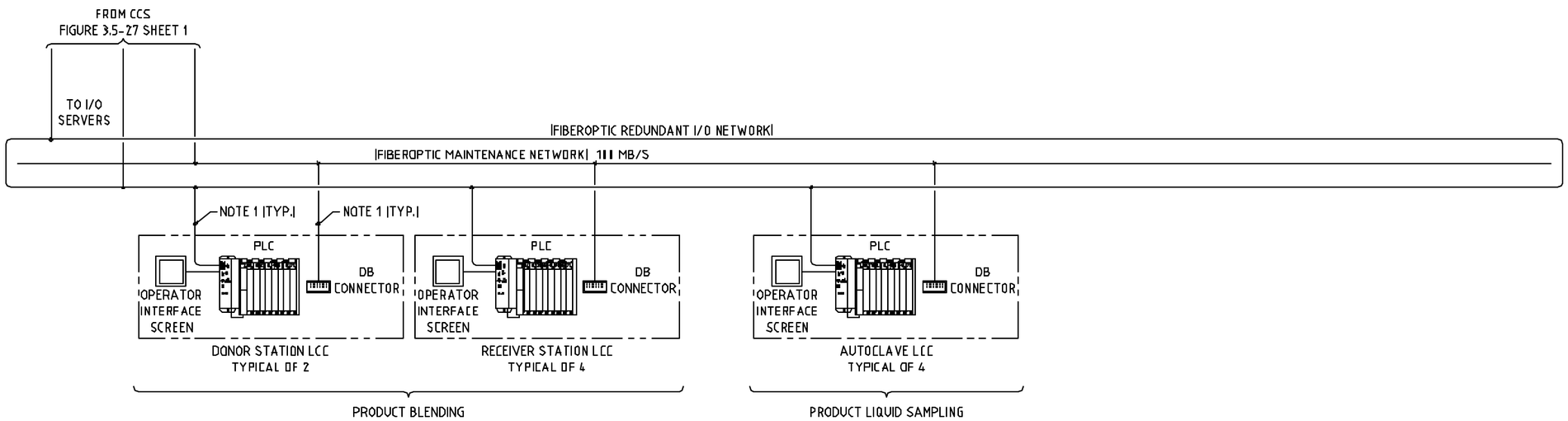

NOTE

1. CONNECTION OF PLC TO I/O AND MAINTENANCE NETWORKS ARE SUBJECT TO THE PLC MANUFACTURER'S STANDARDS.

SHEET 3 OF 3

LOCKWOOD GREENE
ENGINEERING & CONSTRUCTION

REFERENCE NUMBER
057010009

FIGURE 3.5-27
PLANT CONTROL SYSTEM
LOCAL CONTROL SYSTEM

REVISION DATE: DECEMBER 2003

NOTES:

1. FLOWRATES, SETPOINTS, DUCT OR LINE SIZES ARE PRELIMINARY. ACTUAL QUANTITIES, VALUES AND SIZES WILL BE ESTABLISHED DURING THE DESIGN PHASE IN ACCORDANCE WITH U.S. STANDARDS.

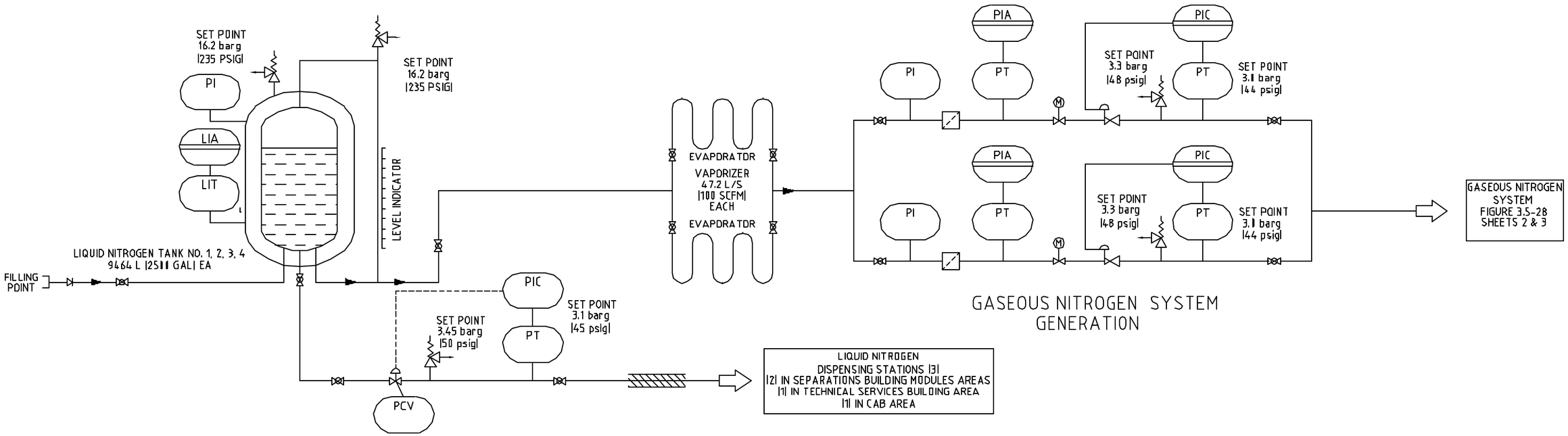

GASEOUS NITROGEN SYSTEM
GENERATION

NITROGEN SYSTEM
(TYPICAL OF FOUR SYSTEMS)

SHEET 1 OF 3

LOCKWOOD GREENE
ENGINEERING & CONSTRUCTION

REFERENCE NUMBER
0640-M-1100

FIGURE 3.5-28
PROCESS FLOW DIAGRAM
NITROGEN SYSTEM

REVISION DATE: DECEMBER 2003

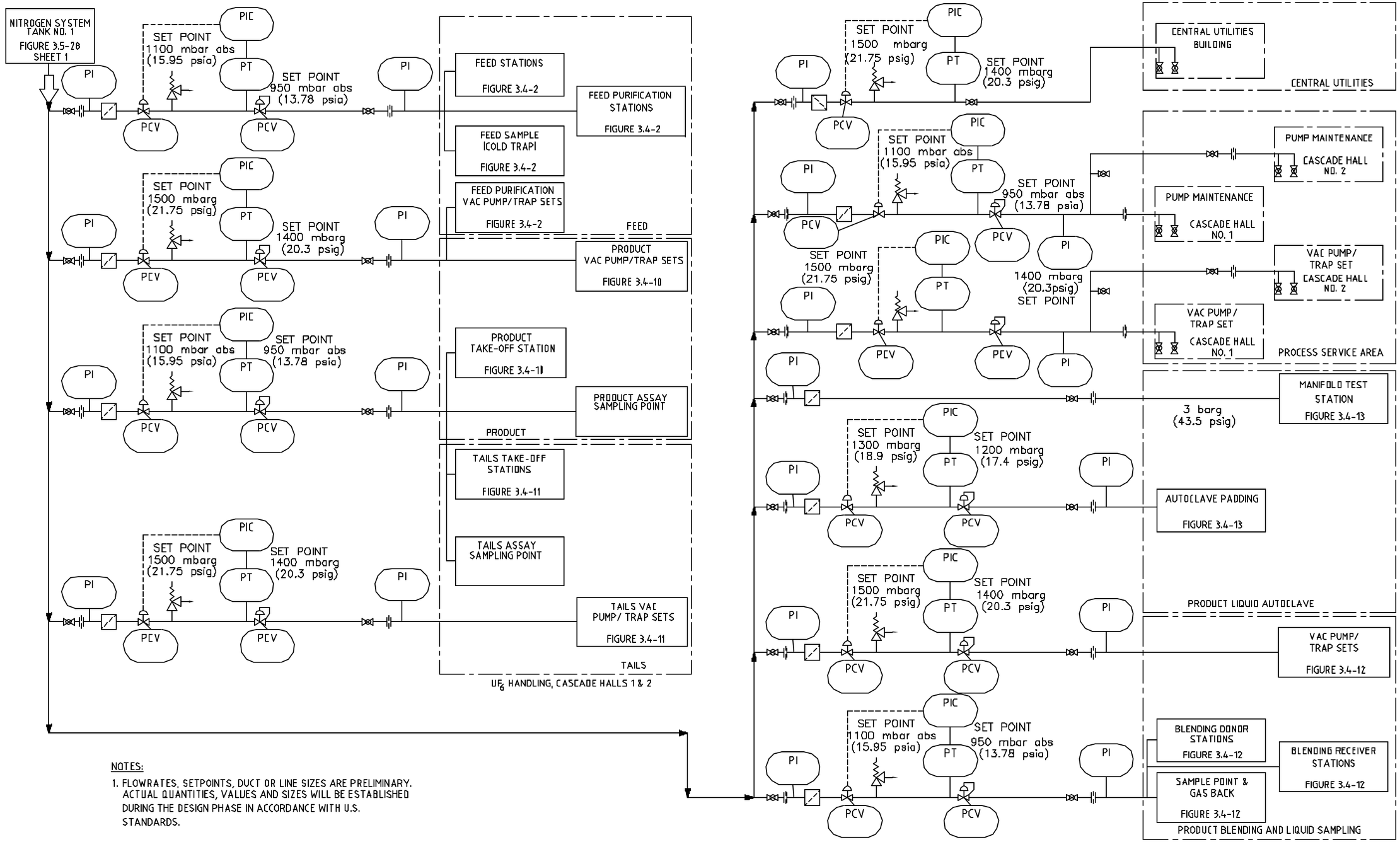

NOTES:

1. FLOWRATES, SETPOINTS, DUCT OR LINE SIZES ARE PRELIMINARY. ACTUAL QUANTITIES, VALUES AND SIZES WILL BE ESTABLISHED DURING THE DESIGN PHASE IN ACCORDANCE WITH U.S. STANDARDS.

SHEET 2 OF 3

LOCKWOOD GREENE ENGINEERING & CONSTRUCTION

REFERENCE NUMBER 0642–M–1100

FIGURE 3.5-28

PROCESS FLOW DIAGRAM
GASEOUS NITROGEN SYSTEM

REVISION DATE: DECEMBER 2003

NOTES:

1. FLOWRATES, SETPOINTS, DUCT OR LINE SIZES ARE PRELIMINARY. ACTUAL QUANTITIES, VALUES AND SIZES WILL BE ESTABLISHED DURING THE DESIGN PHASE IN ACCORDANCE WITH U.S. STANDARDS.

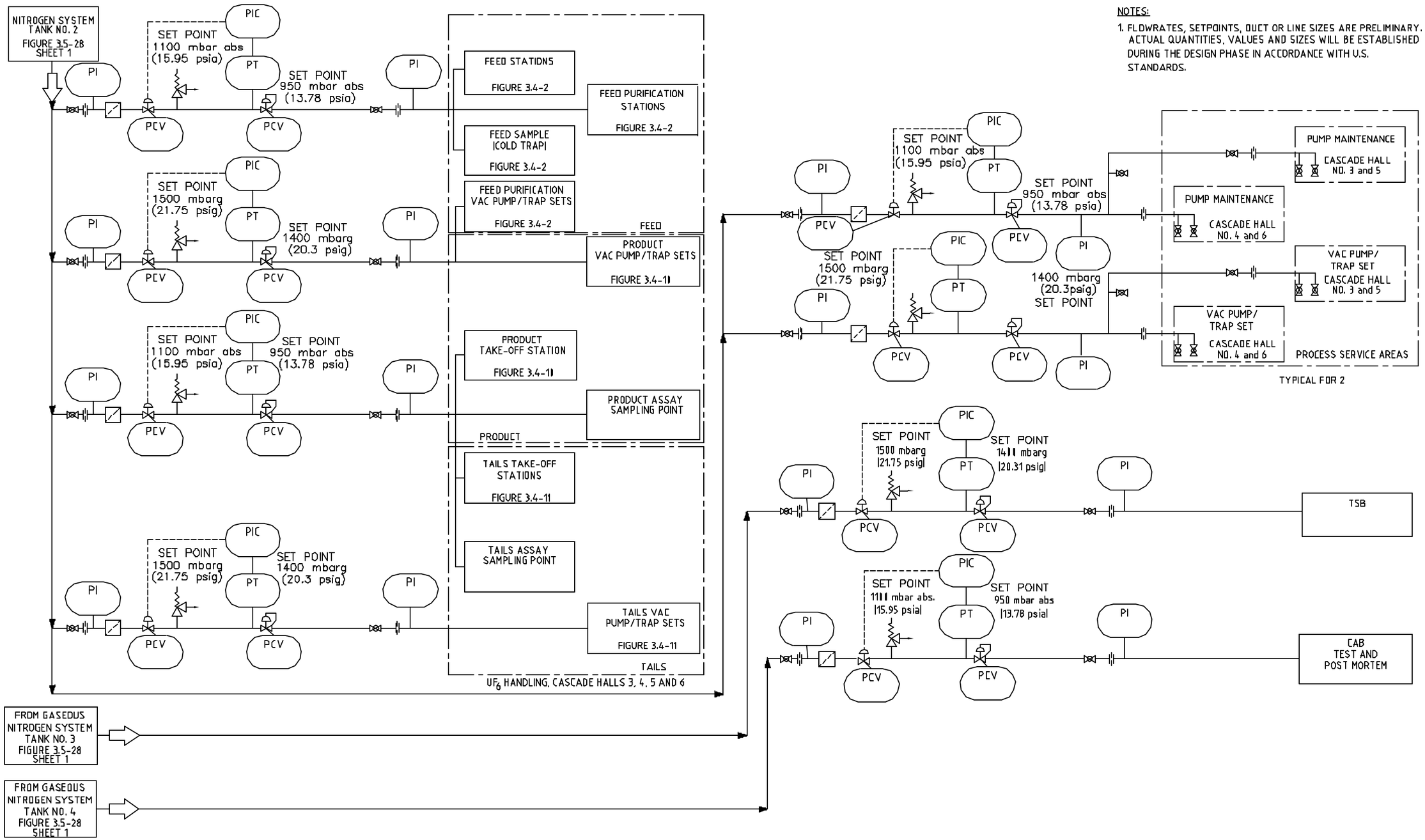

SHEET 3 OF 3

LOCKWOOD GREENE ENGINEERING & CONSTRUCTION

REFERENCE NUMBER 0642-M-1101

FIGURE 3.5-28

PROCESS FLOW DIAGRAM GASEOUS NITROGEN SYSTEM

REVISION DATE: DECEMBER 2003

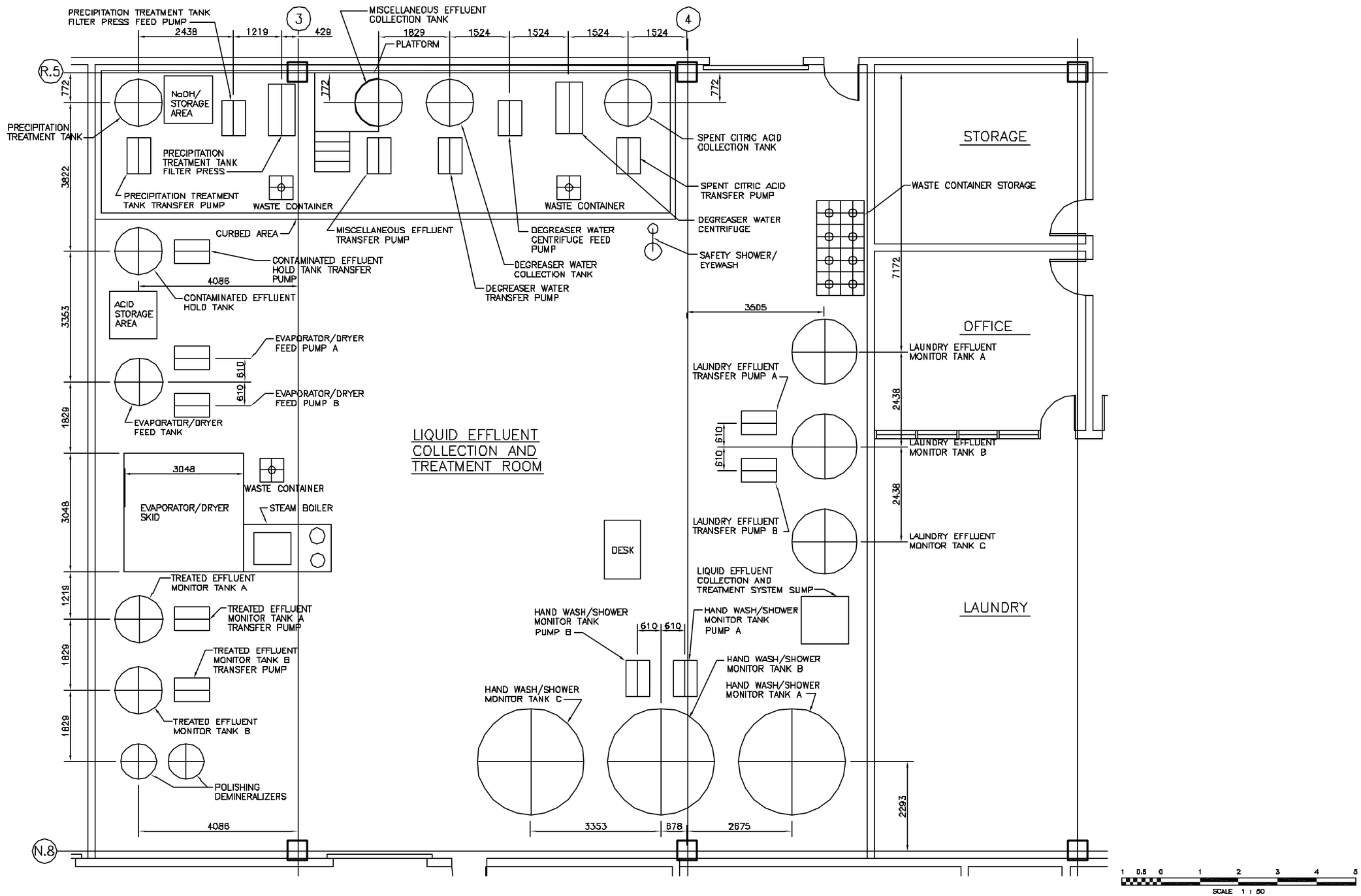

LOCKWOOD GREENE ENGINEERING & CONSTRUCTION	**FIGURE 3.5-29** LIQUID EFFLUENT COLLECTION AND TREATMENT ROOM EQUIPMENT ARRANGEMENT
REFERENCE NUMBER 1500–R–2500	REVISION DATE: DECEMBER 2003

NOTES:

1. THIS STREAM IS OPERATED IN A "BATCH" MODE.
2. HOSE CONNECTION CAN BE USED FOR DIKE PUMP-OUT OR DEIONIZED WATER WASHOUT.
3. PUMPED CONTENTS INCLUDE WASTE FROM SAMPLE BOTTLE AND FLEXIBLE HOSE DECONTAMINATION THAT WERE MANUALLY TRANSFERRED TO CITRIC ACID TANK IN DECONTAMINATION SYSTEM.

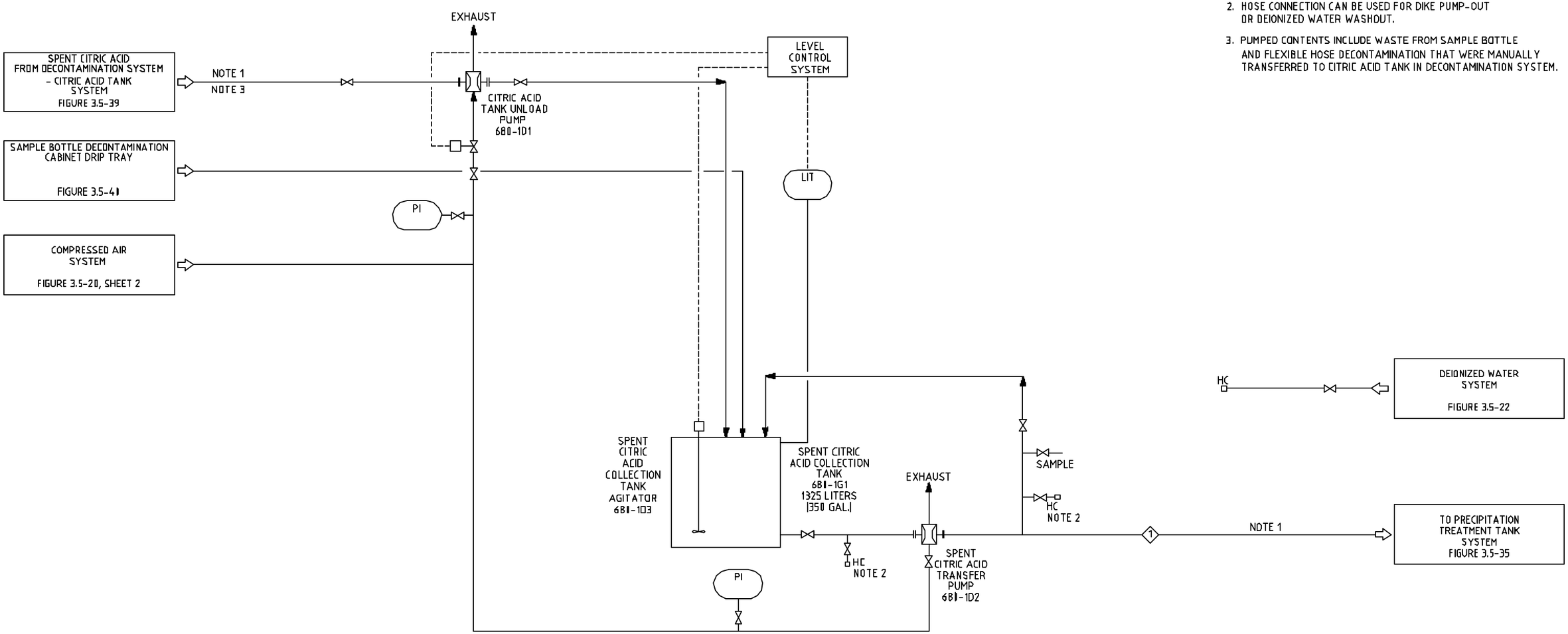

STREAM No.	1
ANNUAL FLUID QUANTITY, l/yr	2728
gal/yr	721
ANNUAL URANIC QUANTITY, Kg/yr	22
lb/yr	48.5
BATCH FLUID QUANTITY, l	989
gal	261

LOCKWOOD GREENE
ENGINEERING & CONSTRUCTION

REFERENCE NUMBER
1500-R-1101

FIGURE 3.5-30
PROCESS FLOW DIAGRAM
SPENT CITRIC ACID

REVISION DATE: DECEMBER 2003

NOTES:

1. THIS STREAM IS OPERATED IN A "BATCH" MODE.
2. HOSE CONNECTION CAN BE USED FOR DIKE PUMP-OUT OR DEIONIZED WATER WASHOUT.
3. TOTAL ANNUAL SLUDGE DISCHARGES FROM THE DEGREASER WATER CENTRIFUGE, PRECIPITATION TREATMENT TANK FILTER PRESS, AND CONTAMINATED EFFLUENT EVAPORATOR/DRYER ARE ESTIMATED TO BE 410 KG (882 LB) OF SOLIDS, INCLUDING 57 KG (126 LB) OF URANIUM.
4. URANIC CONTENT REMOVED BY THE CENTRIFUGE TO BE DETERMINED DURING FINAL DESIGN (SEE NOTE 3 ABOVE).

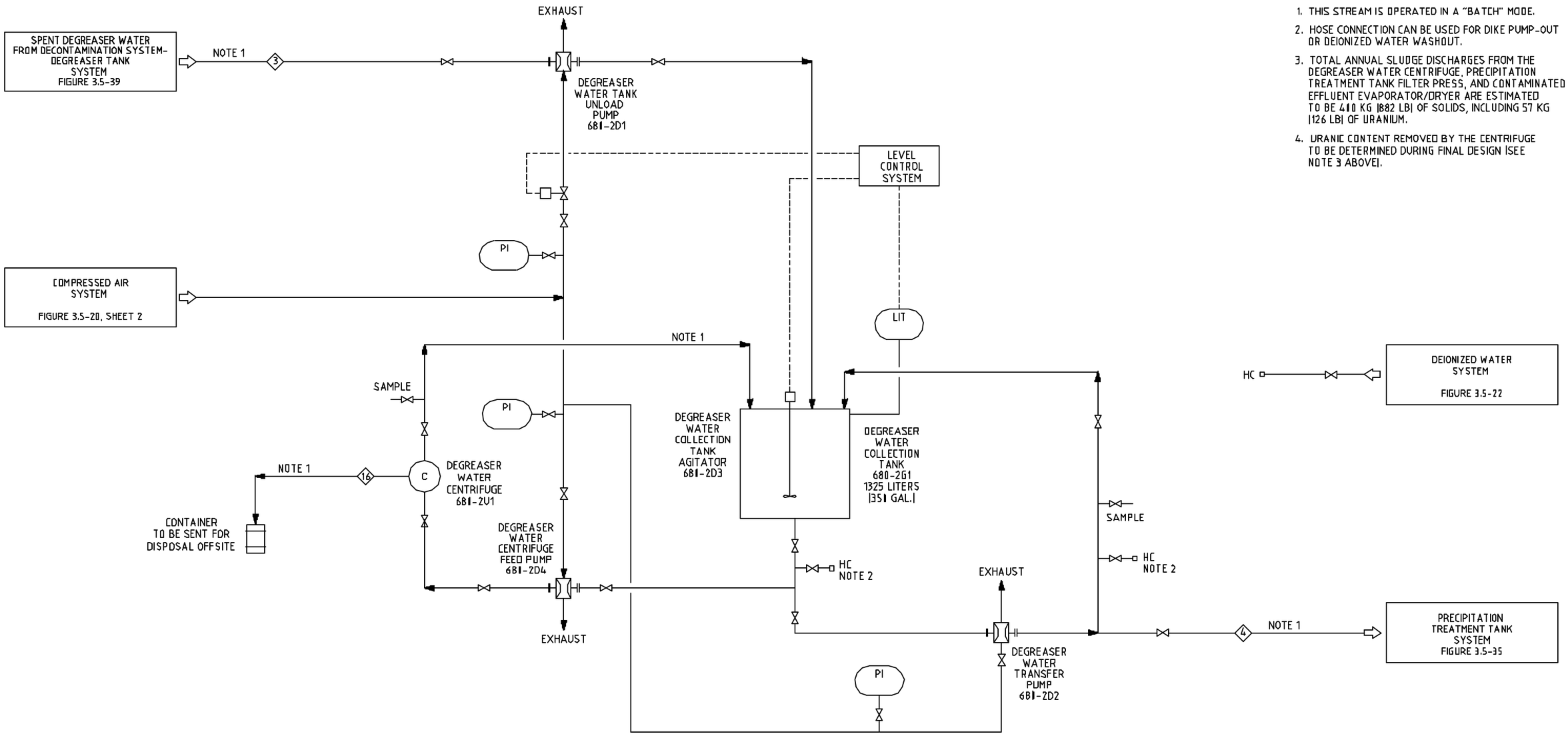

STREAM No.	3	4	16
ANNUAL FLUID QUANTITY, l/yr	3711	3710	
gal/yr	981	980	
ANNUAL URANIC QUANTITY, Kg/yr	18.5	NOTE 4	NOTE 3
lb/yr	41.8	NOTE 4	NOTE 3
BATCH FLUID QUANTITY, l	989	989	
gal	261	261	

LOCKWOOD GREENE
ENGINEERING & CONSTRUCTION

REFERENCE NUMBER
1500-R-1102

FIGURE 3.5-31
PROCESS FLOW DIAGRAM
DEGREASER WATER

REVISION DATE: DECEMBER 2003

NOTES:

1. THIS STREAM IS OPERATED IN A "BATCH" MODE.
2. THIS STREAM MAY BE MANUALLY COLLECTED AND MANUALLY TRANSPORTED TO THE MISCELLANEOUS EFFLUENT COLLECTION TANK.
3. HOSE CONNECTION CAN BE USED FOR DIKE PUMP-OUT OR DEIONIZED WATER WASHOUT.
4. MISCELLANEOUS EFFLUENT IS SAMPLED AND ANALYZED PRIOR TO INPUT TO THIS TANK.

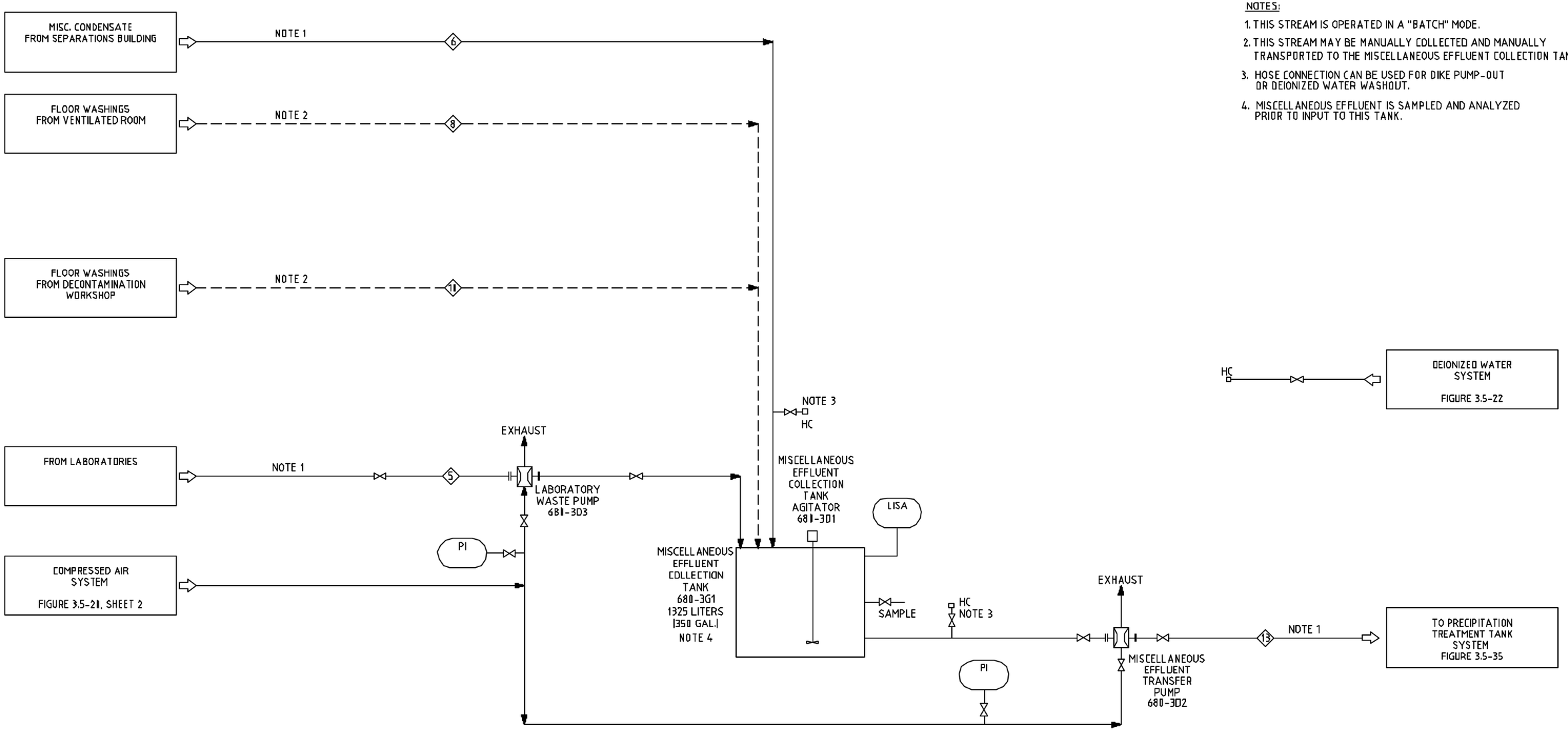

STREAM No.	5	6	8	10	13
ANNUAL FLUID QUANTITY, l/yr	20615	2401	41	81	23135
gal/yr	5446	634	11.6	21.1	6112
ANNUAL URANIC QUANTITY, Kg/yr	16	NONE	TRACE	TRACE	16
lb/yr	35.3	NONE	TRACE	TRACE	35.3
BATCH FLUID QUANTITY, l	56.5	6.6	21	40	
gal	14.9	1.74	5.28	10.6	

LOCKWOOD GREENE ENGINEERING & CONSTRUCTION

REFERENCE NUMBER 1500-R-1103

FIGURE 3.5-32

PROCESS FLOW DIAGRAM MISCELLANEOUS EFFLUENT

REVISION DATE: DECEMBER 2003

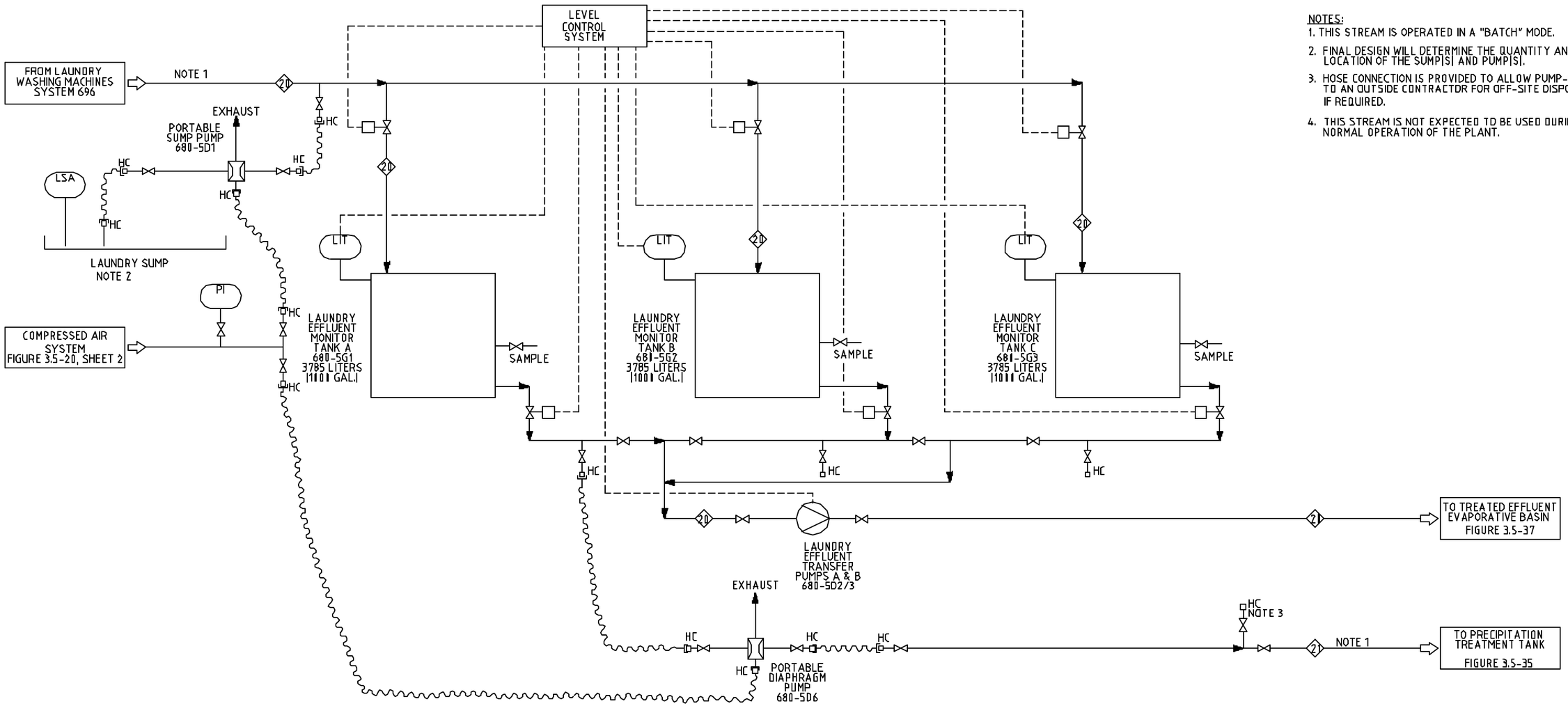

NOTES:

1. THIS STREAM IS OPERATED IN A "BATCH" MODE.
2. FINAL DESIGN WILL DETERMINE THE QUANTITY AND LOCATION OF THE SUMP(S) AND PUMP(S).
3. HOSE CONNECTION IS PROVIDED TO ALLOW PUMP-OUT TO AN OUTSIDE CONTRACTOR FOR OFF-SITE DISPOSAL, IF REQUIRED.
4. THIS STREAM IS NOT EXPECTED TO BE USED DURING NORMAL OPERATION OF THE PLANT.

STREAM No.	20	21
ANNUAL FLUID QUANTITY, l/yr	405,812	0
gal/yr	107,213	0
ANNUAL URANIC QUANTITY, Kg/yr	0.2	0
lb/yr	0.441	0
BATCH FLUID QUANTITY, l		0
gal		0
		NOTE 4.

LOCKWOOD GREENE
ENGINEERING & CONSTRUCTION

REFERENCE NUMBER
1500-R-1105

FIGURE 3.5-33
PROCESS FLOW DIAGRAM
LAUNDRY EFFLUENT

REVISION DATE: DECEMBER 2003

NOTES:

1. THIS STREAM IS OPERATED IN A "BATCH" MODE.
2. SUMP DESIGNED TO PREVENT ADDITION OF MISCELLANEOUS EFFLUENTS.

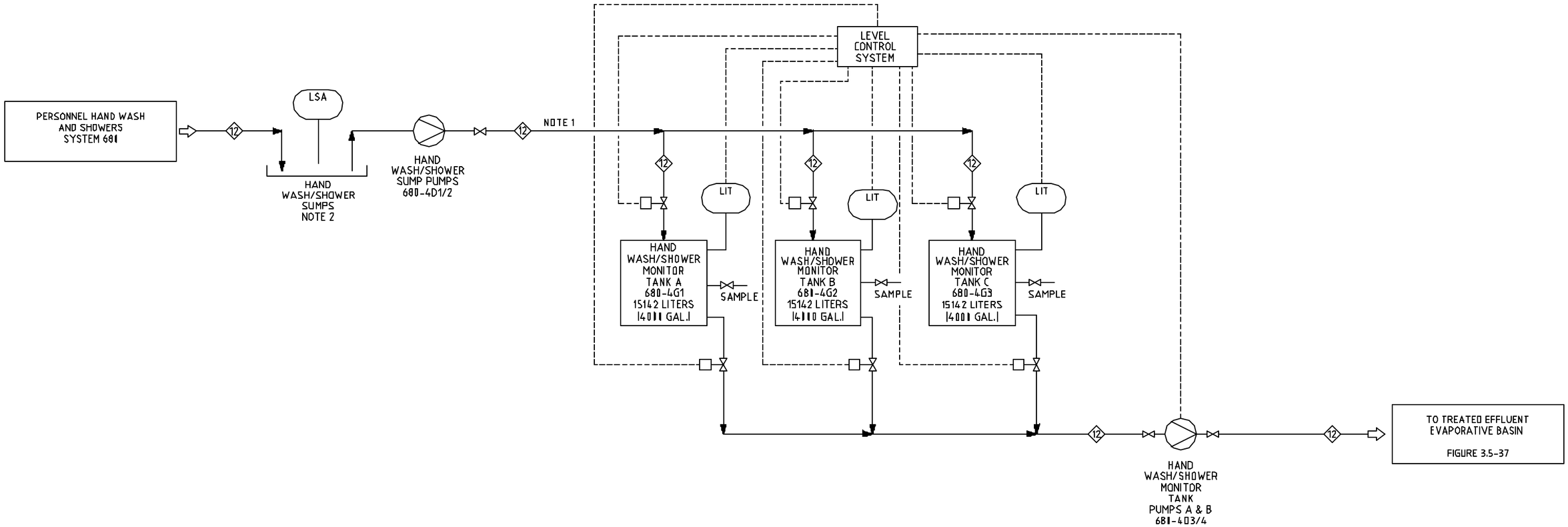

STREAM No.	12
ANNUAL FLUID QUANTITY, l/yr	2,100,000
gal/yr	554,820
ANNUAL URANIC QUANTITY, Kg/yr	NONE
lb/yr	NONE
BATCH FLUID QUANTITY, l	5753
gal	1520

LOCKWOOD GREENE ENGINEERING & CONSTRUCTION

REFERENCE NUMBER 1500-R-1104

FIGURE 3.5-34

PROCESS FLOW DIAGRAM
HAND WASH/SHOWER EFFLUENT

REVISION DATE: DECEMBER 2003

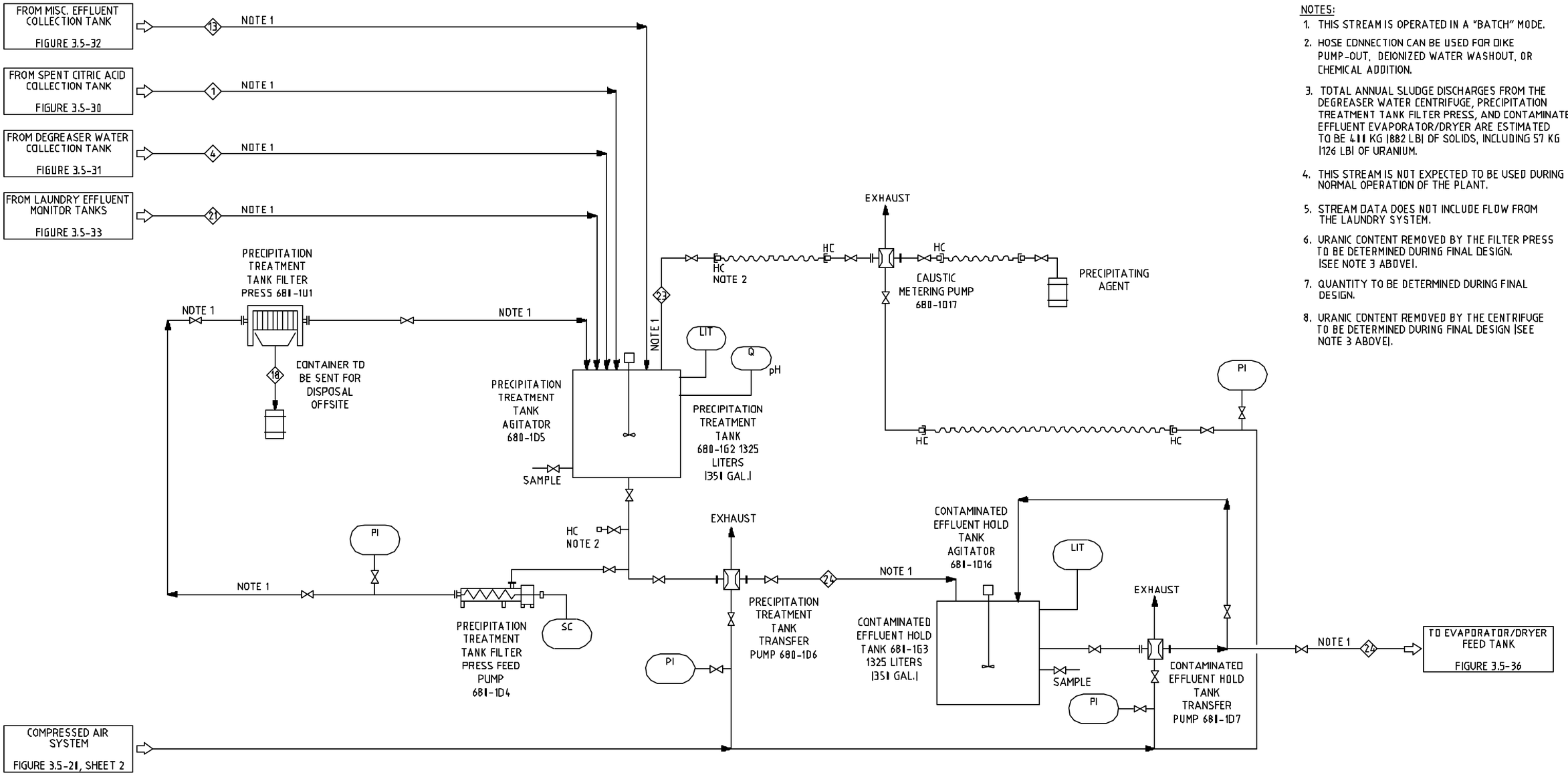

NOTES:

1. THIS STREAM IS OPERATED IN A "BATCH" MODE.
2. HOSE CONNECTION CAN BE USED FOR DIKE PUMP-OUT, DEIONIZED WATER WASHOUT, OR CHEMICAL ADDITION.
3. TOTAL ANNUAL SLUDGE DISCHARGES FROM THE DEGREASER WATER CENTRIFUGE, PRECIPITATION TREATMENT TANK FILTER PRESS, AND CONTAMINATED EFFLUENT EVAPORATOR/DRYER ARE ESTIMATED TO BE 411 KG (882 LB) OF SOLIDS, INCLUDING 57 KG (126 LB) OF URANIUM.
4. THIS STREAM IS NOT EXPECTED TO BE USED DURING NORMAL OPERATION OF THE PLANT.
5. STREAM DATA DOES NOT INCLUDE FLOW FROM THE LAUNDRY SYSTEM.
6. URANIC CONTENT REMOVED BY THE FILTER PRESS TO BE DETERMINED DURING FINAL DESIGN. (SEE NOTE 3 ABOVE).
7. QUANTITY TO BE DETERMINED DURING FINAL DESIGN.
8. URANIC CONTENT REMOVED BY THE CENTRIFUGE TO BE DETERMINED DURING FINAL DESIGN (SEE NOTE 3 ABOVE).

STREAM No.	1	4	13	18	21	23	24
ANNUAL FLUID QUANTITY, L/yr	2720	3711	23135		1	NOTE 7	29,565
gal/yr	719	981	6112		1		7811
ANNUAL URANIC QUANTITY, Kg/yr	22	NOTE 8	16	NOTE 3	1		NOTE 6
lb/yr	48.5	NOTE 8	35.3		1		NOTE 6
BATCH FLUID QUANTITY, L	989	989			1		
gal	261	261			1		
					NOTE 4		NOTE 5

LOCKWOOD GREENE ENGINEERING & CONSTRUCTION

REFERENCE NUMBER 1500-R-1106

FIGURE 3.5-35

PROCESS FLOW DIAGRAM PRECIPITATION/TREATMENT

REVISION DATE: DECEMBER 2003

NOTES:

1. THIS STREAM IS OPERATED IN A "BATCH" MODE.
2. TOTAL ANNUAL SLUDGE DISCHARGES FROM THE DEGREASER WATER CENTRIFUGE, PRECIPITATION TREATMENT TANK FILTER PRESS, AND CONTAMINATED EFFLUENT EVAPORATOR/DRYER ARE ESTIMATED TO BE 401 KG (882 LB) OF SOLIDS, INCLUDING 57 KG (126 LB) OF URANIUM.
3. URANIC CONTENT REMOVED BY THE FILTER PRESS TO BE DETERMINED DURING FINAL DESIGN. (SEE NOTE 2 ABOVE).
4. STREAM DATA DOES NOT INCLUDE FLOW FROM THE LAUNDRY SYSTEM.
5. URANIC CONTENT REMOVED BY THE EVAPORATOR/DRYER TO BE DETERMINED DURING FINAL DESIGN. (SEE NOTE 2 ABOVE).
6. THIS STREAM IS NOT EXPECTED TO BE USED DURING NORMAL OPERATION OF THE PLANT.
7. QUANTITY TO BE DETERMINED DURING FINAL DESIGN.

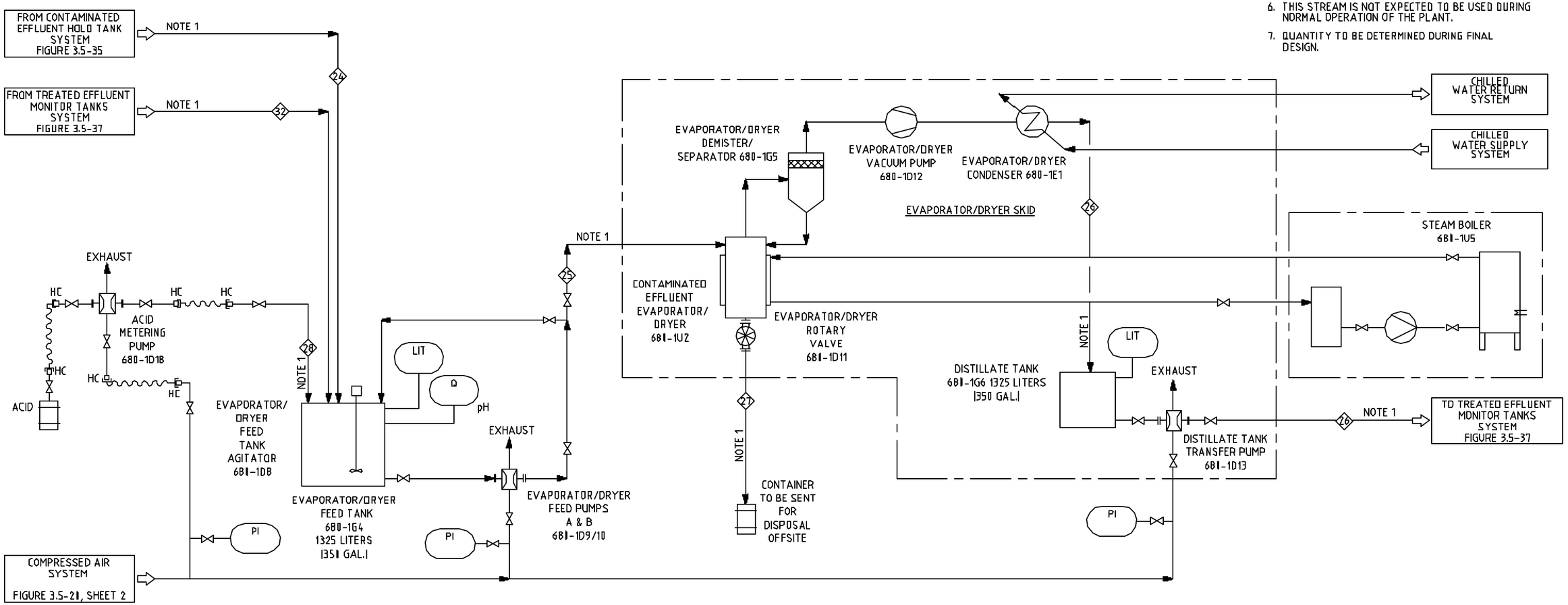

STREAM No.	24	25	26	27	28	32
ANNUAL FLUID QUANTITY, l/yr	29,565	29,565	29,565		NOTE 7	I
gal/yr	7811	7811	7811		NOTE 7	I
ANNUAL URANIC QUANTITY, Kg/yr	NOTE 3		NOTE 5	NOTE 2		I
lb/yr	NOTE 3		NOTE 5	NOTE 2		I
BATCH FLUID QUANTITY, l						I
gal						I
		NOTE 4	NOTE 4			NOTE 6

LOCKWOOD GREENE ENGINEERING & CONSTRUCTION

REFERENCE NUMBER 1500-R-1107

FIGURE 3.5-36

PROCESS FLOW DIAGRAM EVAPORATOR/DRYER

REVISION DATE: DECEMBER 2003

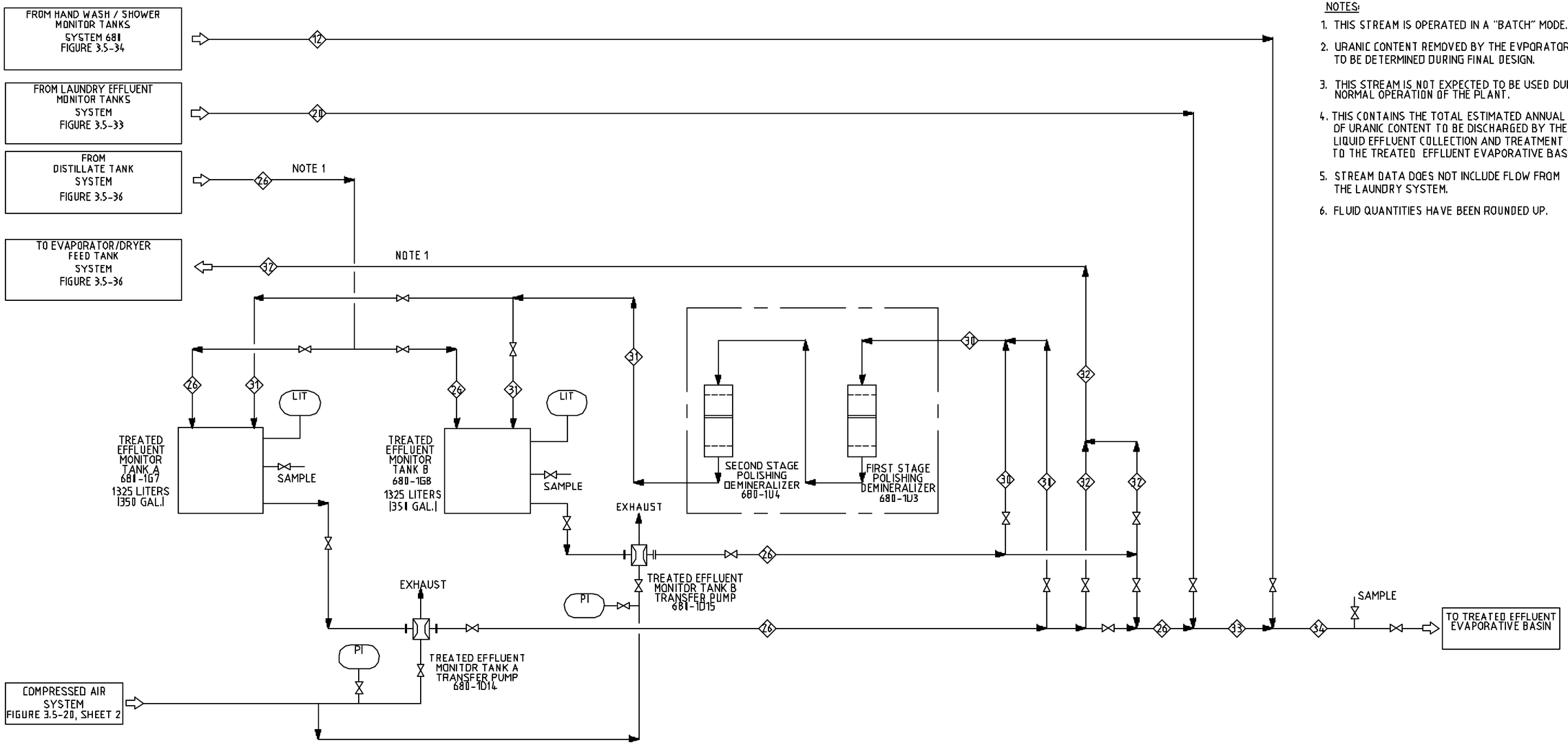

NOTES:

1. THIS STREAM IS OPERATED IN A "BATCH" MODE.
2. URANIC CONTENT REMOVED BY THE EVPORATOR/DRYER TO BE DETERMINED DURING FINAL DESIGN.
3. THIS STREAM IS NOT EXPECTED TO BE USED DURING NORMAL OPERATION OF THE PLANT.
4. THIS CONTAINS THE TOTAL ESTIMATED ANNUAL QUANTITY OF URANIC CONTENT TO BE DISCHARGED BY THE LIQUID EFFLUENT COLLECTION AND TREATMENT SYSTEM TO THE TREATED EFFLUENT EVAPORATIVE BASIN.
5. STREAM DATA DOES NOT INCLUDE FLOW FROM THE LAUNDRY SYSTEM.
6. FLUID QUANTITIES HAVE BEEN ROUNDED UP.

STREAM No.	12	20	26	30	31	32	33	34
ANNUAL FLUID QUANTITY, L/yr	2,100,011	405,812	29,565	1	0	1	435,410	2,535,400
gal/yr	554,821	107,213	7811	1	0	1	115,033	669,853
ANNUAL URANIC QUANTITY, Kg/yr	NONE	0.2	NOTE 2	1	0	1	1.57	1.57
lb/yr	NONE	0.441	NOTE 2	1	0	1	1.26	1.26
BATCH FLUID QUANTITY, L	5753			1	0	1		
gal	1520			1	0	1		
			NOTE 5	NOTE 3	NOTE 3	NOTE 3	NOTE 4	NOTE 4
							NOTE 6	NOTE 6

LOCKWOOD GREENE
ENGINEERING & CONSTRUCTION

REFERENCE NUMBER
1500-R-1108

FIGURE 3.5-37
PROCESS FLOW DIAGRAM
TREATED EFFLUENT POLISHING

REVISION DATE: DECEMBER 2003

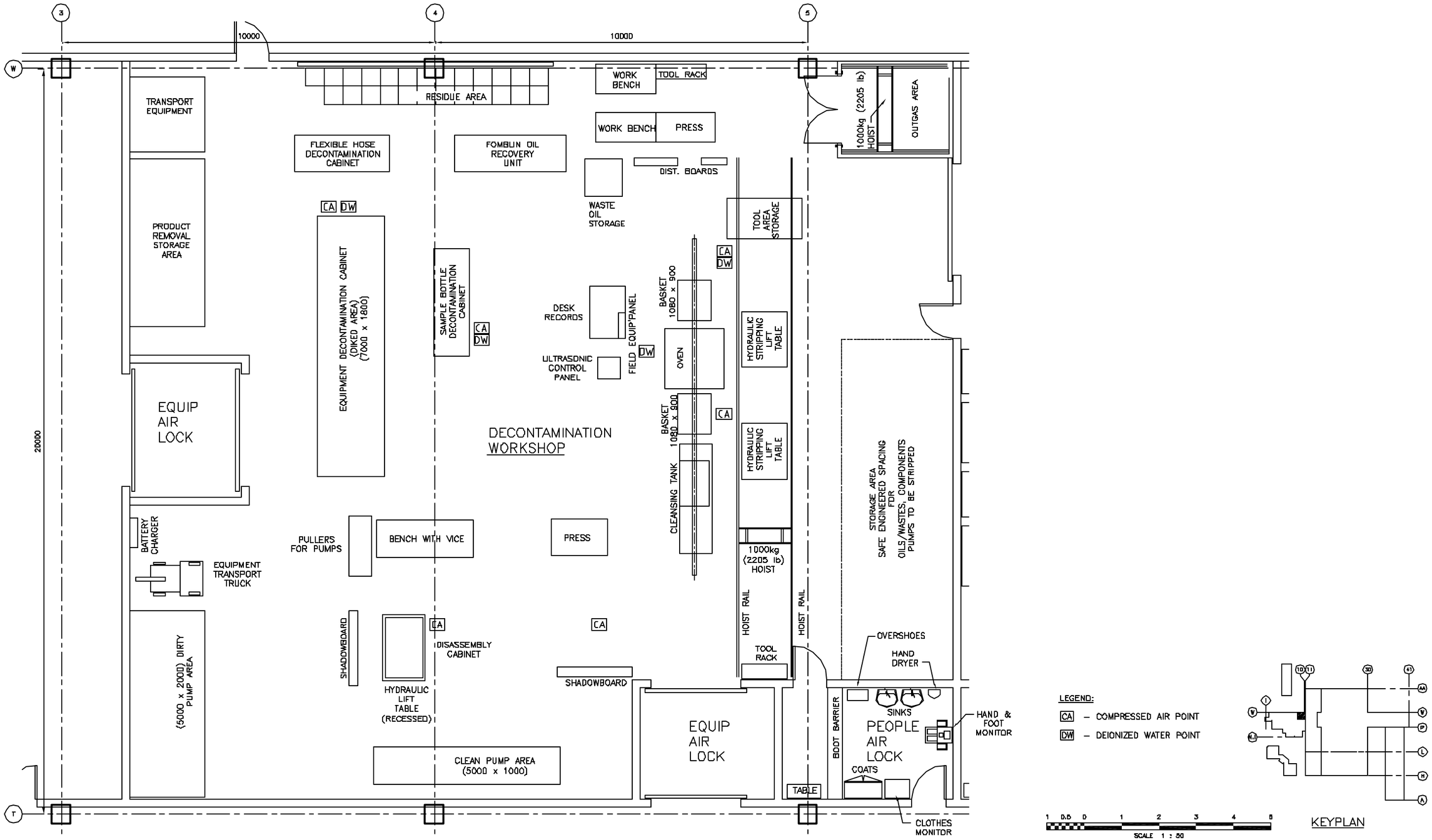

LOCKWOOD GREENE
ENGINEERING & CONSTRUCTION

REFERENCE NUMBER
1500–R–2501

FIGURE 3.5-38
DECONTAMINATION WORKSHOP
EQUIPMENT ARRANGEMENT

REVISION DATE: DECEMBER 2003

NOTES:

1. STEPS 1 TO 4 INDICATE THE SEQUENCE/STAGES THAT THE BASKET OF CONTAMINATED COMPONENTS PASSES THROUGH.

2. TANKS TO HAVE RING HEADERS FOR SLUDGE RINSES, SUPPLEMENTED BY MANUALLY CONTROLLED SPRAY WHEN NECESSARY.

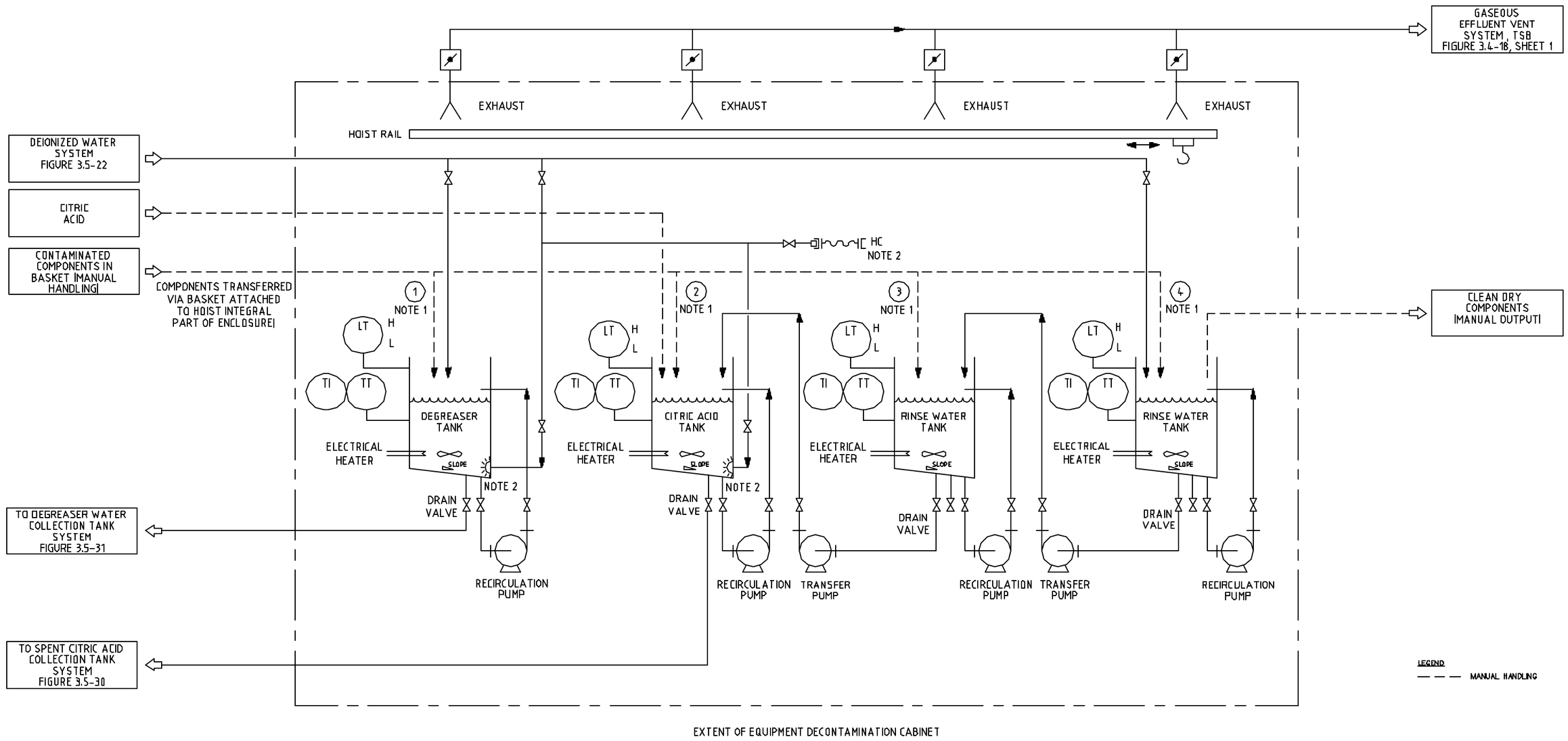

LOCKWOOD GREENE ENGINEERING & CONSTRUCTION

REFERENCE NUMBER 1500-R-1109

FIGURE 3.5-39

PROCESS FLOW DIAGRAM
EQUIPMENT DECONTAMINATION SYSTEM

REVISION DATE: DECEMBER 2003

NOTES

1. LIQUID COLLECTED IS ADDED TO CITRIC ACID TANK IN THE EQUIPMENT DECONTAMINATION SYSTEM, FIGURE 3.5-30.

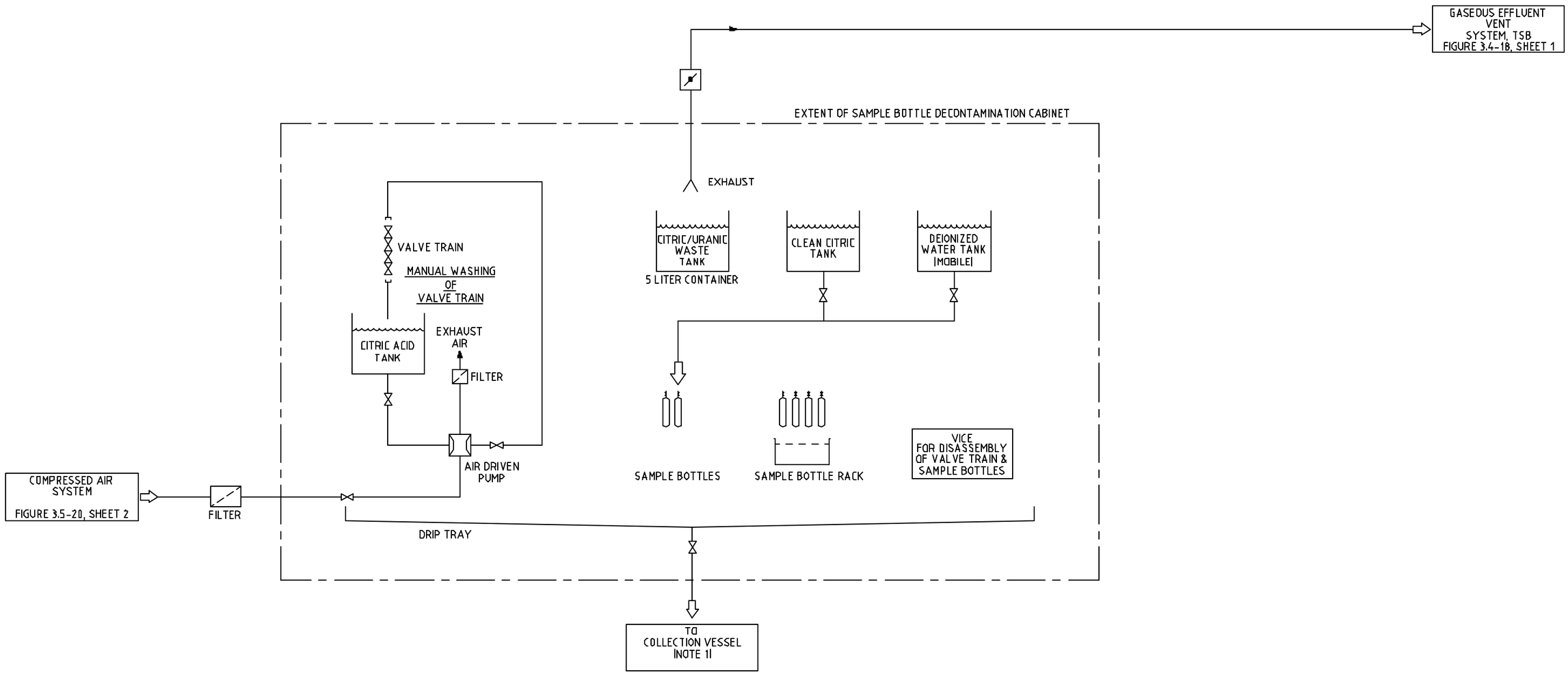

LOCKWOOD GREENE ENGINEERING & CONSTRUCTION

REFERENCE NUMBER 1500-R-1111

FIGURE 3.5-40

PROCESS FLOW DIAGRAM
DECONTAMINATION SYSTEM FOR SAMPLE BOTTLES

REVISION DATE: DECEMBER 2003

NOTES

1. PUMP STARTS ONLY WHEN BOTH THE VALVE INTERLOCKS ARE ESTABLISHED & THE CABINET DOORS ARE CLOSED.
2. TEMPERATURE IN BOTH THE CITRIC ACID & DEIONIZED WATER TANK IS MAINTAINED AT 60°C.
3. CITRIC ACID TANK SAFE BY SHAPE.

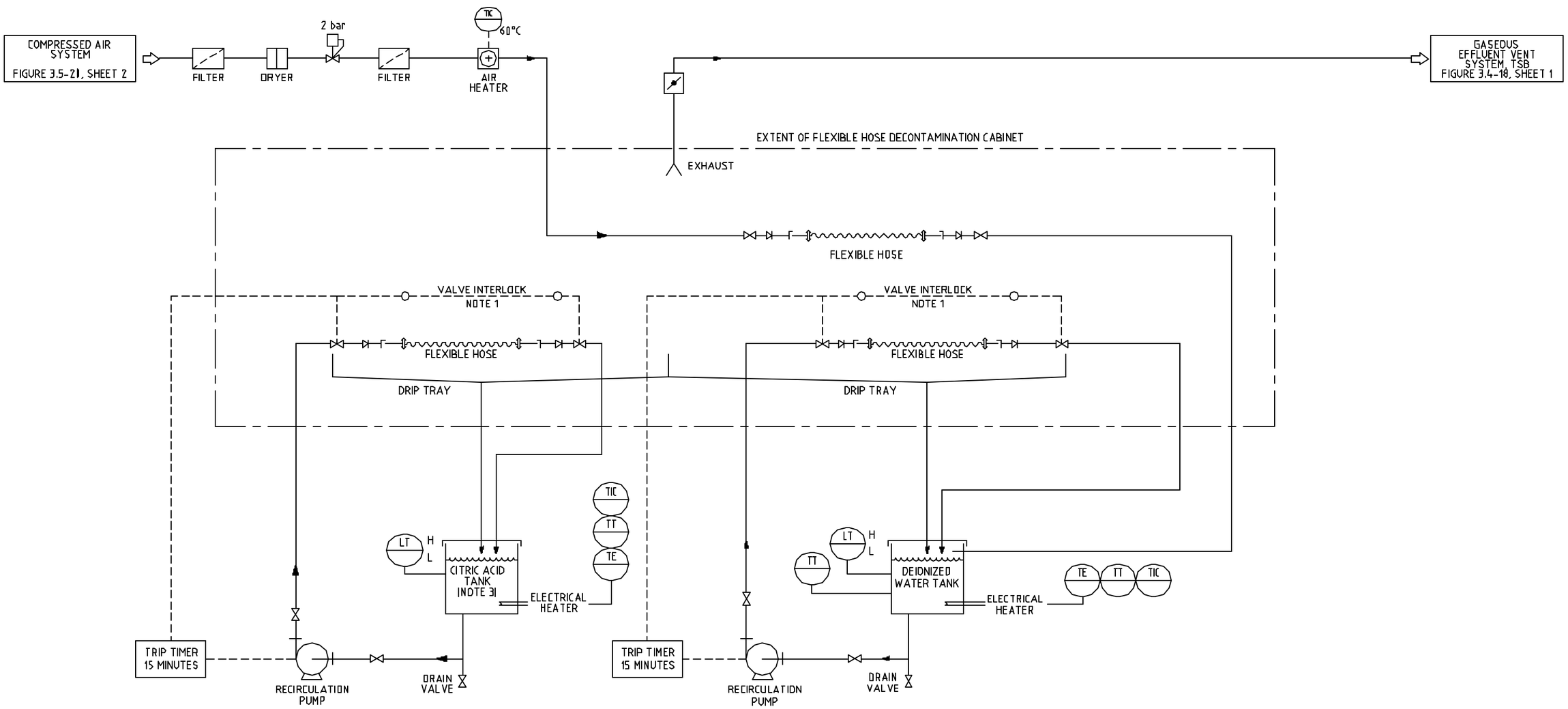

LOCKWOOD GREENE
ENGINEERING & CONSTRUCTION

REFERENCE NUMBER
1500-R-1110

FIGURE 3.5-41

PROCESS FLOW DIAGRAM
DECONTAMINATION SYSTEM FOR FLEXIBLE HOSES

REVISION DATE: DECEMBER 2003

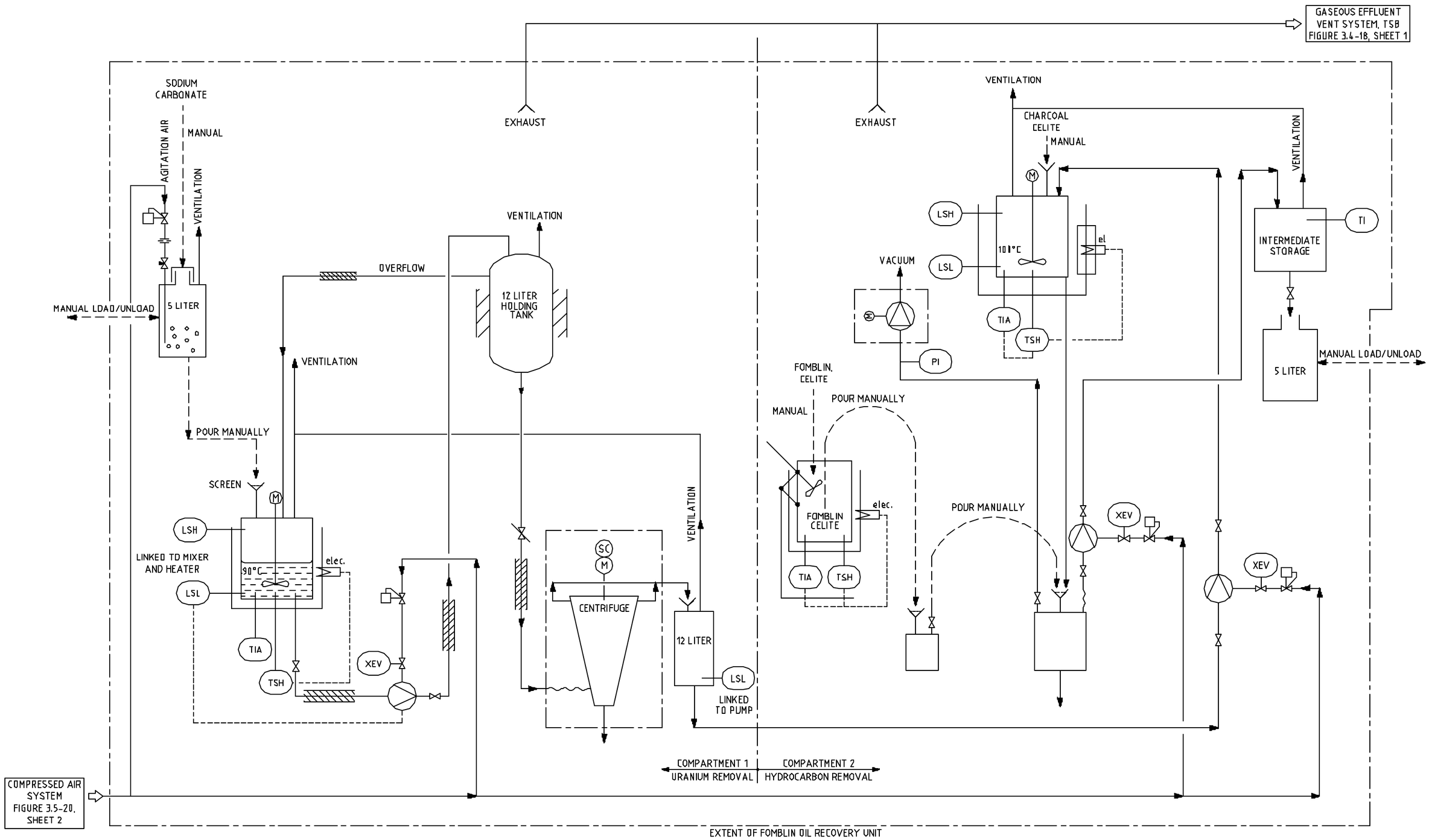

LOCKWOOD GREENE ENGINEERING & CONSTRUCTION

REFERENCE NUMBER 1500-R-1112

FIGURE 3.5-42

PROCESS FLOW DIAGRAM
FOMBLIN OIL RECOVERY SYSTEM

REVISION DATE: DECEMBER 2003

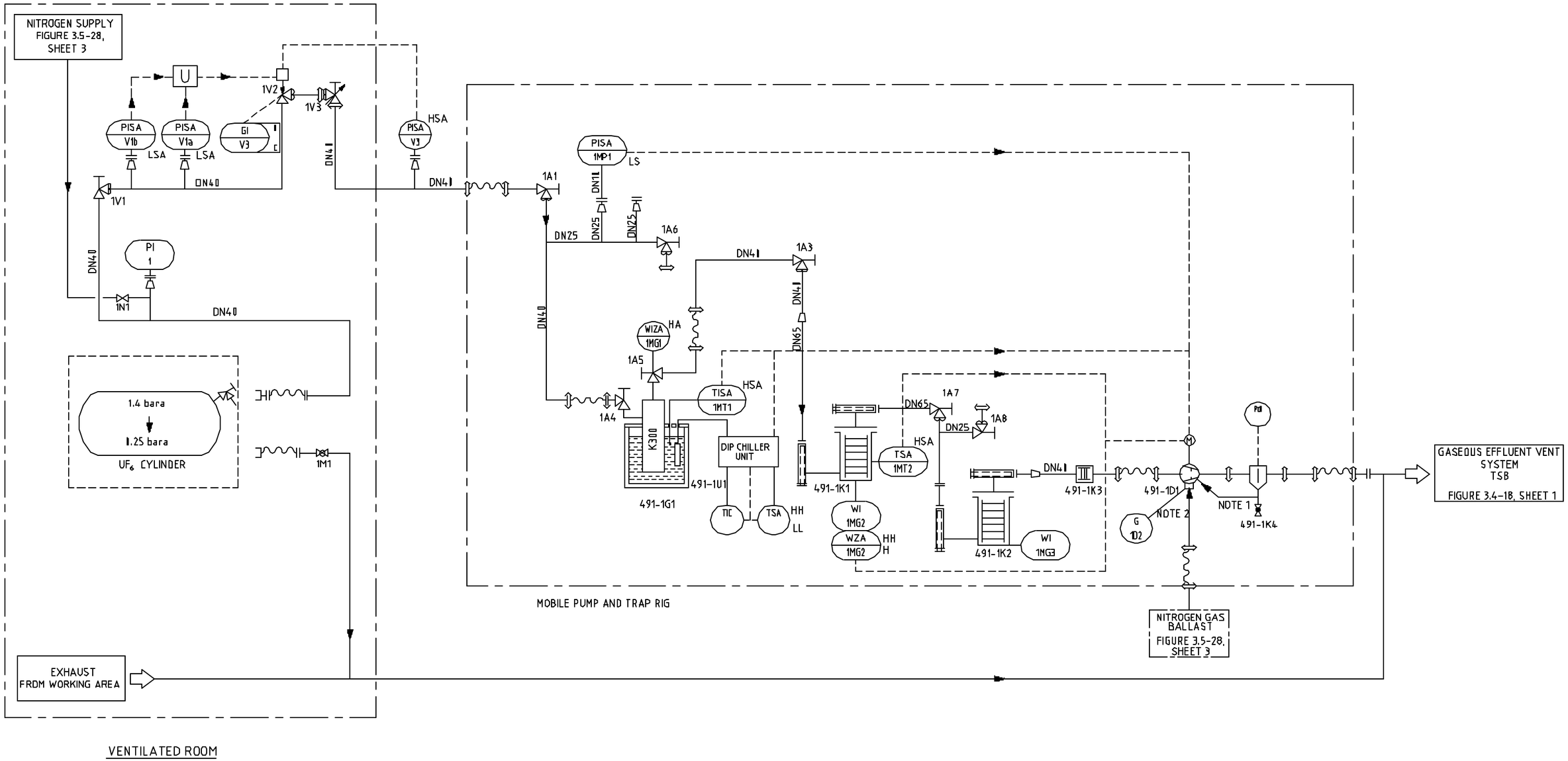

NOTES:

1. OIL RETURN
2. NITROGEN GAS BALLAST CONTROL UNIT FITTED TO PUMP.

DESCRIPTION	UF_6 COLD TRAP	DIP/CHILLER UNIT	CARBON TRAP	ALUMINUM OXIDE TRAP	ALUMINUM OXIDE TRAP	SLIDING VANE ROTARY PUMP	OIL TRAP
IDENTIFICATION No	491-1G1	491-1U1	491-1K1	491-1K2	491-1K3	491-1D1	491-1K4
QUANTITY	1	1	1	1	1	1	1
ELECTRICAL LOAD	x	x	x	x	x	1.5 kw	x
DRAWING No	x	x	x	x	x	x	x
CAPACITY	x	x	x	x	x	x	x

LOCKWOOD GREENE
ENGINEERING & CONSTRUCTION

REFERENCE NUMBER
1500-R-1509

FIGURE 3.5-43

PIPING AND INSTRUMENTATION DIAGRAM
CYLINDER PRESSURE TEST
AND PUMP OUT

REVISION DATE: DECEMBER 2003

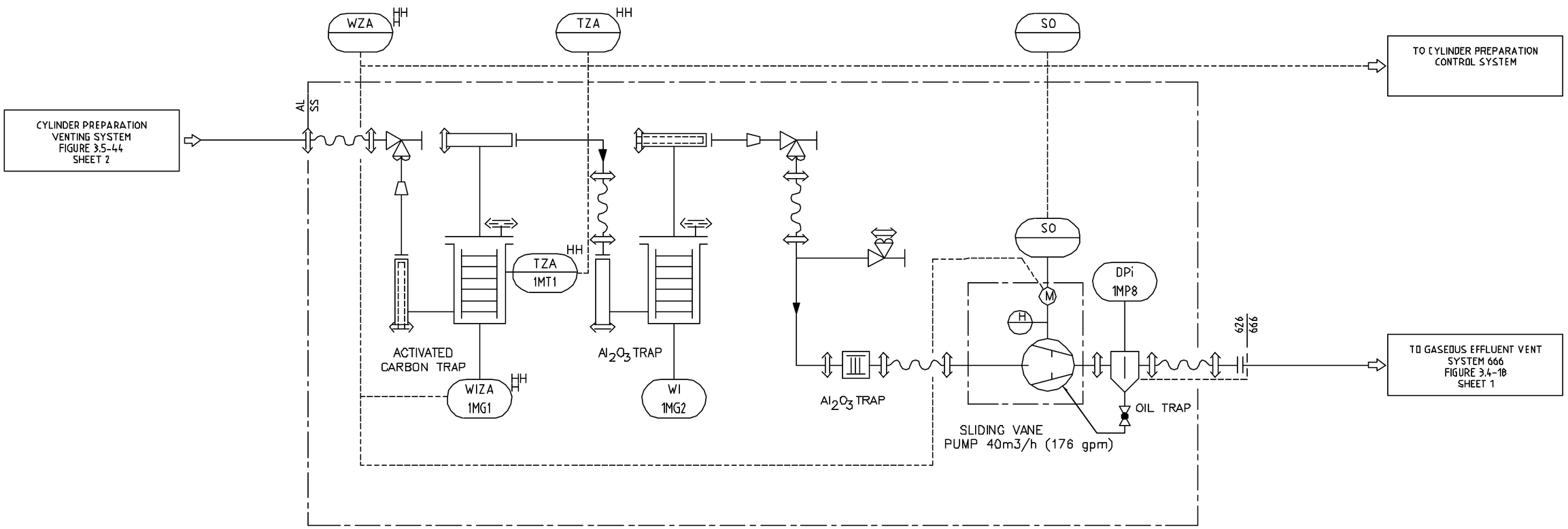

LEGEND

— - — DENOTES PACKAGE BOUNDARY

SHEET 1 OF 2

LOCKWOOD GREENE
ENGINEERING & CONSTRUCTION

REFERENCE NUMBER
0626-M-1100

FIGURE 3.5-44

PROCESS FLOW DIAGRAM
CYLINDER PREPARATION
VACUUM PUMP AND TRAP SET SYSTEM

REVISION DATE: DECEMBER 2003

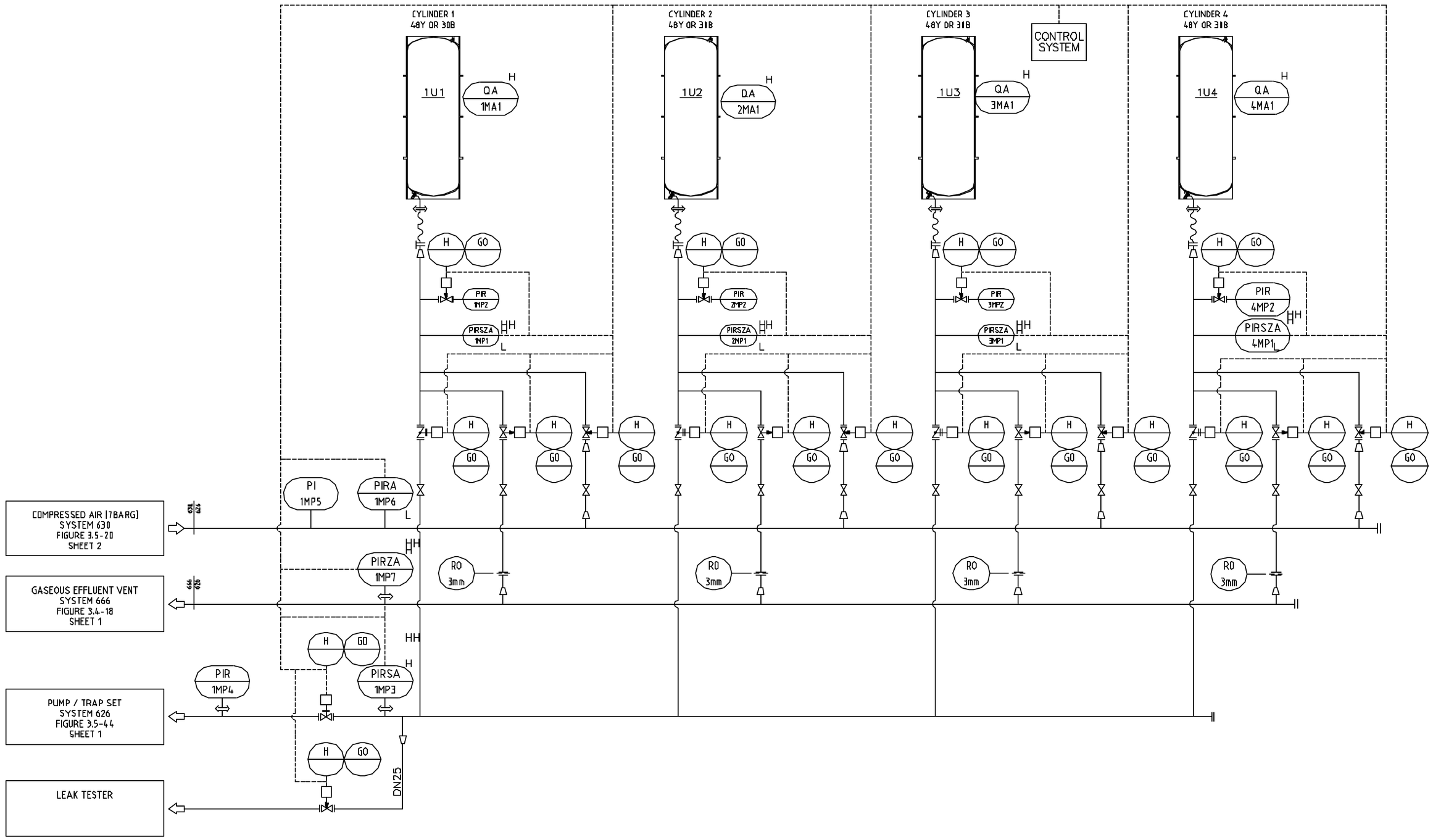

SHEET 2 OF 2

LOCKWOOD GREENE
ENGINEERING & CONSTRUCTION

REFERENCE NUMBER
626-M-1101

FIGURE 3.5-44

PROCESS FLOW DIAGRAM
CYLINDER PREPARATION
VACUUM PUMP AND TRAP SET SYSTEM

REVISION DATE: DECEMBER 2003

TABLE OF CONTENTS

Page

3.6 PROCESS HAZARDS 3.6-1

(This page intentionally left blank)

3.6 PROCESS HAZARDS

The separation of uranium isotopes is a physical rather than chemical process. Natural uranium hexafluoride (UF_6) arrives at the National Enrichment Facility (NEF) in the solid phase in a 48-inch diameter cylinder. To begin the enrichment process, the 48-inch diameter feed cylinder is placed into a Solid Feed Station. The Solid Feed Station consists of an insulated enclosure, which is heated by electric heaters to 53°C (127°F).* At this temperature and pressure (sub-atmospheric), the solid UF_6 sublimes into a gas. The gaseous UF_6 is fed to the cascades for enriching to a maximum of 5 $^{w}/_{o}$ ^{235}U. An important safety feature of the feed system is that at no time does the UF_6 go into a liquid phase. Enriched and depleted UF_6 streams are withdrawn from the cascades by pumps and returned to the solid phase in Product and Tails Low Temperature Take-off Stations, respectively. These stations consist of insulated enclosures that are maintained at -25°C (-13°F) * by electrically operated chiller units. As the gaseous UF_6 enters the cylinder (either product or tails), desublimation into solid UF_6 occurs. No process chemical reactions are initiated.

Although the separation of isotopes is a physical rather than chemical process, chemical principles play an important role in the design of the facility. The phase behavior of UF_6 is critical to the design of all aspects of the facility. Chemical reactions include the undesirable reaction between UF_6 and water, which produces the toxic reaction products uranyl fluoride (UO_2F_2) and hydrogen fluoride (HF). Maintaining the UF_6 process piping at sub-atmospheric pressures minimizes this reaction in the event of a pipe leak. Other chemical reactions are controlled by utility systems that decontaminate equipment and remove contaminants from effluent streams and lubricating oil.

The process hazards associated with the NEF were identified in the Integrated Safety Analysis (ISA). These process hazards include radioactivity, toxicity of UF_6 and breakdown products, and criticality. The hazards from radioactivity were evaluated in the ISA and found to be low consequence. Some of the hazards associated with UF_6 release or criticality were found to be intermediate and high consequence. The potential accident sequences and consequences are discussed in greater detail in Section 3.7, General Types of Accident Sequences.

*NOTE: Design process parameter values are specified with a datum of standard atmospheric pressure at sea level. These values will be finalized to reflect the site-specific National Enrichment Facility elevation during the design phase and the Safety Analysis Report will be revised accordingly.

TABLE OF CONTENTS

Page

3.7 GENERAL TYPES OF ACCIDENT SEQUENCES.....3.7-1

3.7.1 Process Risk Assessment 3.7-4
3.7.2 Fire and External Events Risk Assessment.....3.7-4
3.7.3 Selected Consequence Analysis 3.7-4
3.7.3.1 Nuclear Criticality 3.7-5
3.7.3.2 Blending Donor Station Heater Controller Failure and Heater Run Away (No IROFS Credited).....3.7-6
3.7.4 References 3.7-7

LIST OF TABLES

Table 3.7-1 Accident Sequence and Risk Index
Table 3.7-2 Accident Sequence Descriptions
Table 3.7-3 External Events And Fire Accident Sequences And Risk Index
Table 3.7-4 External Events and Fire Accident Descriptions

LIST OF FIGURES

Figure 3.7-1 TEDE Doses from Postulated Criticality Accident
Figure 3.7-2 Airborne Uranium Concentrations Due to a Heater Runaway Release
Figure 3.7-3 Airborne Uranium Intake Due to a Heater Runaway Release
Figure 3.7-4 TEDE Doses Due to a Heater Runaway Release
Figure 3.7-5 Airborne Hydrogen Fluoride Concentrations Due to a Heater Runaway Release

(This page intentionally left blank)

3.7 GENERAL TYPES OF ACCIDENT SEQUENCES

Table 3.7-1, Accident Sequence and Risk Index, lists the potential accident sequences that were identified that could have consequences that exceed the performance criteria of 10 CFR 70.61 (CFR, 2003). The accident sequences identified in Table 3.7-1 include those from the classified and non-classified Integrated Safety Analysis (ISA). The likelihood, consequence, and risk ratings are also provided. The measures to reduce the risk to acceptable levels (Items Relied on for Safety (IROFS)) by either reducing the frequency of occurrence of the events or mitigating the consequences of the events are also identified. Additional details/descriptions of the accident sequences presented in Table 3.7-1 are provided in Table 3.7-2, Accident Sequence Descriptions. Again, these descriptions include the classified ISA results.

The results presented in Tables 3.7-1 and 3.7-2 are for the hazards identified for the process systems. The fire (external to the process systems) and external events (e.g., severe weather, seismic, transportation and industrial) hazards were assessed on a facility-wide basis and the results summarized in Tables 3.7-3, External Events and Fire Accident Sequences and Risk Index and 3.7-4, External Events and Fire Accident Descriptions. These are discussed in additional detail later in the text.

The accident sequence risk assessment demonstrates that credible high-consequence events are highly unlikely and credible intermediate-consequence events are unlikely. IROFS necessary to prevent or mitigate event sequences that exceed 10 CFR 70.61 (CFR, 2003) criteria have been identified.

The definitions for the contents of each column in the accident summary tabulation in Table 3.7-1 and Table 3.7-3 are provided below. The ISA methodology is described in Section 3.1, General ISA Information.

<u>Accident Identifier</u>

This column identifies the accident sequence being analyzed. The ISA will have all accident sequences for each uniquely identified facility process. The accident sequence identifier has the format AAB-C where AA is the system/area from the table below, B is the Hazard and Operability (HAZOP) Analysis node number and C is the accident sequence number.

Accident Sequence System Identifier	
Identifier (AA)	**System/Area**
CL	Chemical Laboratory
CH	Technical Services Building (TSB) Contaminated Workshop and Laboratories HVAC
CP	Cylinder Preparation Room
DC	Contingency Dump
DS	Decontamination
EC	Cascade
FR	Fomblin Oil Recovery
LR	Laundry
LT	Liquid Effluent Treatment
LW	Liquid Effluent Collection
MS	Mass Spectrometry Laboratory
PB	Product Blending and Liquid Sampling
PT	Product Take-Off
RD	Cylinder Receipt and Dispatch
SV	Separations Building Gaseous Effluent Vent
SW	Solid Waste Collection
TP	CentrifugeTest/Centrifuge Post Mortem
TT	Tails Take-Off
TV	TSB Gaseous Effluent Vent
UF	UF_6 Feed
VR	Ventilated Room

Initiating Event Index (Column a)

This column lists initiating events or IROFS failures that are typically identified in the Process Hazard Analysis (PHA) phase of the ISA and that may lead to consequences exceeding those identified in 10 CFR 70.61 (CFR, 2003). Initiating events are of several distinct types: (1) external events, such as hurricanes and earthquakes; (2) facility events external to the node being analyzed (e.g., fires, explosions, failures of other equipment, flooding from facility water sources); (3) deviations from normal operations of the process in the node (i.e., credible abnormal events); and (4) failures of IROFS of the node. The tabulated initiating events consist of those that involve an actual or assumed failure of IROFS or that cause a demand requiring IROFS to function to prevent consequences exceeding 10 CFR 70.61 (CFR, 2003) levels. The frequency index number for initiating events is given in the table in column (a)." Table 3.1-9, Failure Frequency Index Numbers, provides criteria for assigning a value to the frequency index.

Preventive Safety Parameter 1 or IROFS 1 Failure Index (Column b)

This column addresses the failure or success of the safety parameter designated to prevent consequences exceeding 10 CFR 70.61 (CFR, 2003) criteria. Specific IROFS that are needed to maintain the safety parameter are included in the table. The failure duration of the first IROFS is assigned using Table 3.1-11, Failure Duration Index Numbers. Accident sequences

where two IROFS must simultaneously be in a failed state require assignment of the three index numbers (1) the failure frequency of the first IROFS, (2) the duration of this failure and (3) the failure frequency of the second IROFS. Except where identified on Table 3.7-3, External Events And Fire Accident Sequences And Risk Index, failure duration index numbers are zero (zero corresponds to an average failure duration and test frequency of one year) and are therefore not explicitly shown on Table 3.7-1 and Table 3.7-3. Reverse sequences are not identified in Table 3.7-1 since the failure frequencies and the duration of outages of the first and second IROFS of accident sequences with multiple IROFS are the same. Accident sequences may be more easily described as an occurrence of an initiating event followed by a failure of the IROFS on demand. In these cases, the failure probability index number is assigned using Table 3.1-10, Failure Probability Index Numbers and the failure duration is assigned using Table 3.1-11.

Preventive Safety Parameter 2 or IROFS 2 Failure Index (Column c)

This column is provided in case a second preventive Safety Parameter or IROFS is designated. The failure probability on demand is assigned in the same manner as for preventive IROFS 1.

Mitigation IROFS Failure Index (Column d)

This column is provided in case IROFS are available to mitigate the consequences of the accident sequence. That is, they reduce, but do not eliminate, the consequences of an accident sequence. An IROFS that eliminates all adverse consequences is considered preventive.

Likelihood Index T Uncontrolled (U)/Controlled (C) (Column e) and Likelihood Category (Column f)

Column (f) lists the likelihood category number for the risk matrix, which is based on the total likelihood index for an accident sequence. Column (e) is the total likelihood index, T, is the sum of the indices for those events that comprise an accident sequence, which normally consists of the initiating event and failure of one or more IROFS, including any failure duration indices. Based on the sum of these indices, the likelihood category number for the risk matrix is assigned using Table 3.1-8, Determination of Likelihood Category.

Consequence Category (Type of Accident) (Column g)

This column is provided to assign the consequence category numbers based on estimating the consequences of all types (i.e., radiological, criticality, chemical, and environmental) of accident sequences that may occur. Accident sequences having IROFS to mitigate consequences are divided into two cases, one where the mitigation succeeds, and one where it fails, each with different consequences. The type of accident is also listed in parenthesis where T indicates chemical and CR indicates criticality.

Risk Index (h = f x g) Uncontrolled(U)/Controlled (C) (Column h)

This column is provided to list the risk index, which is calculated as the product of the likelihood category and consequence category numbers. This is shown in the column heading by the formula “h = f x g.” Sequences with values of "h" less than or equal to 4 are acceptable. (See Table 3.1-6, Risk Matrix with Risk Index Values).

Comments and Recommendations

This column records ISA team conclusions.

3.7.1 Process Risk Assessment

The results of the risk assessment performed for each accident sequence are summarized in Table 3.7-1, Accident Sequence and Risk Index. The following information is provided for each accident sequence, including the inclusion of any events which were screened as not credible:

- Consequences for each general type of uncontrolled accident sequence
- Comparison of the accident consequences to the performance requirements of 10 CFR 70.61 (CFR, 2003) and designation of each as a 'high consequence event' (10 CFR 70.61(b)) (i.e., Consequence Category 3), an 'intermediate consequence event' (10 CFR 70.61(c)) (i.e., Consequence Category 2) or neither (i.e. an event of no regulatory concern (low consequence event)) (i.e., Consequence Category 1)
- Likelihood of occurrence of each accident sequence, expressed in terms of the likelihood category (3=not unlikely, 2=unlikely, 1=highly unlikely)
- Classification of the risk of each uncontrolled accident sequence
- Classification of the likelihood of occurrence of each accident sequence (following application of IROFS)
- Classification of the risk of each controlled accident sequence

The detailed descriptions for the accident sequences are provided in Table 3.7-2, Accident Sequence Descriptions.

3.7.2 Fire and External Events Risk Assessment

As discussed previously, facility fires (FF) and external events (EE) were assessed on a facility-wide basis. The results of this assessment are presented in Tables 3.7-3, External Events and Fire Accident Sequences and Risk Index, and 3.7-4, External Events and Fire Accident Descriptions. The ISA methodology utilized for external events and facility fires is described in Section 3.1, General Integrated Safety Analysis (ISA) Information. The information contained in the columns in Table 3.7-3, External Events and Fire Accident Sequences and Risk Index is defined in Section 3.7.1, Process Risk Assessment.

3.7.3 Selected Consequence Analysis

To support the classification of ISA events and sequences by the National Enrichment Facility Emergency Plan, consequence analyses have been performed for the postulated events identified in the ISA Summary for which protective actions may be necessary. The only

postulated events are nuclear criticality and loss of containment leading to a very large release of UF_6. These analyses have been performed for a Nuclear Criticality scenario and for a Blending Donor Station Heater Controller Failure and Heater Run Away scenario. For both of these scenarios, IROFS have been designated which result in acceptable risk results for these accidents. However, for the Emergency Plan, no credit for these IROFS is taken in the results presented in this section.

3.7.3.1 Nuclear Criticality

A conservative public consequence calculation for a criticality event has been completed. The consequence analysis methodology is based on NUREG/CR-6410 (NRC, 1998). The calculations were performed using the following assumptions:

- The criticality was assumed to occur in a vented vessel of unfavorable geometry containing a 400 L (105.6 gal) solution of uranium enriched in ^{235}U
- The criticality produces an initial burst of 1.0E+18 fissions, followed by 47 bursts of 1.92E+17 fissions per burst, for a total of 1.0E+19 fissions in 8 hours
- The event terminates when 100 L (26.4 gal) of the initial 400 L (105.6 gal) of solution is evaporated.

The consequence calculations included dose contributions from:

- Prompt gamma rays produced by the criticality event
- Fission products produced by the criticality event
- The uranium isotopes.

The off-site radiological impacts considered:

- Direct shine doses from prompt gamma radiation emitted during the criticality event
- Submersion, inhalation, and ground shine doses from radioactive material released to the atmosphere as a result of the criticality event.

For the prompt gamma radiation, the source was assumed to be shielded by a 20.3 cm (8 inch) thick concrete wall, and receptors were assumed to be at 340 m from the criticality site and at a number of other distances out to 1.61 km (one mile). Ensuing doses were calculated through use of a point-kernel shielding code, for a 2-hr exposure interval and for the duration of the criticality event (8 hrs).

For the atmospheric releases, 100 % of the noble gases produced by the criticality events and 25 % of the halogens (iodines) produced by the criticality events, and 0.05 % of the particulates and uranium isotopes in the evaporated solution (i.e., 0.0125 % of the totals) were assumed to be released from the vessel where the criticality takes place and released to the atmosphere without mixing or decay within the building. The atmospheric releases were assumed to be at uniform rates representative of the actual airborne releases from the criticality events during the 0 to 2 hr interval and the 2 to 8 hr interval. Credit for deposition within the building and ductwork was conservatively ignored.

Dispersion and ground-deposition of the released radioactivity was based on a computer code, which implements the methodology in Regulatory Guide 1.145 (NRC, 1982) and uses a finite-cloud-correction capability for cloud shine.

Dispersion/deposition calculations were performed for the 5th percentile meteorology to represent adverse dispersion conditions (i.e., better dispersion conditions prevail 95 % of the time), and 50th percentile meteorology to represent the realistic-case analyses.

The ensuing radiological consequences (submersion, inhalation and ground-shine pathways) were calculated at the critical receptor on the site boundary and at a number of distances out to 1.61 km (one mile), using a computer code for radiological impact evaluations. The exposure intervals were assumed to be 2 hrs and 8 hrs, the latter representing the end of the criticality event.

The 2-hr and 8-hr Total Effective Dose Equivalent (TEDE) doses at the site boundary were determined to be 3.1 mSv (310 mRem) and 8.0 mSv (800 mRem), respectively; these doses include the prompt gamma radiation and the released cloud contributions under accident meteorology (5th percentile). The corresponding doses as a function of distance from the criticality site are presented in Figure 3.7-1, TEDE Doses from Postulated Criticality, for both accident (5 %) and average meteorology. These results indicate that the consequences of a postulated criticality event upon members of the public at or beyond the site boundary would be considerably below the threshold for an intermediate consequence event, as defined by 10 CFR 70.61 (CFR, 2003).

This calculation conservatively bounds the various locations in the facility where a criticality event is possible.

3.7.3.2 Blending Donor Station Heater Controller Failure and Heater Run Away (No IROFS Credited)

The initiating event for this scenario is the failure of the Blending Donor Station heater controller causing the blending donor heater within the station to remain on.

For the uncontrolled accident sequence, the product cylinder over heats and the cylinder hydraulically ruptures due to the expansion of the liquid UF_6. Upon cylinder rupture, the product cylinder content of UF_6 is released within the Blending Donor Station. Since the station enclosure is not air tight, the UF_6 is released to the Blending and Liquid Sampling Area. The UF_6, when in contact with air, will produce HF gas and UO_2F_2. The release into the building is then released to the outside. The HVAC is conservatively assumed to be operating at the maximum ventilation flow rate. HF and UO_2F_2 are further transported to outside the site boundary.

Atmospheric dispersion factors were generated for various distances downwind using the algorithms presented in Regulatory Guide 1.145 (NRC, 1982). Two sets of meteorological conditions were evaluated: F stability class with a wind speed of 0.6 m/sec (2.0 ft/s) (representing conservative case consequences) and D stability class with a wind speed of 2.0 m/sec (6.6 ft/s) (representing typical or average case consequences). These conditions are consistent with those used in the consequence analysis for criticality. The results for this scenario are presented in Figures 3.7-2 though 3.7-5. The detailed discussion of the consequence analysis methodology is presented in Section 6.3.2, Consequence Analysis Methodology.

3.7.4 References

CFR, 2003. Title 10,Code of Federal Regulations, Section 70.61, Performance Requirements, 2003.

NRC, 1982. Atmospheric Dispersion Models for Potential Accident Consequence Assessments at Nuclear Power Plants, Regulatory Guide 1.145, Revision 1, U.S. Nuclear Regulatory Commission, 1982.

NRC, 1998. Nuclear Fuel Cycle Accident Analysis Handbook, NUREG/CR-6410, U.S. Nuclear Regulatory Commission, March 1998.

(This page intentionally left blank)

TABLES

(This page intentionally left blank)

Table 3.7-1 Accident Sequence and Risk Index

Accident Identifier	Initiating Event Index	Preventive Safety Parameter 1 or IROFS 1 Failure Index	Preventive Safety Parameter 2 or IROFS 2 Failure Index	Mitigation IROFS Failure Index	Likelihood Index T Uncontrolled (U) / Controlled (C)	Likelihood Category	Consequence Category (Type of Accident)	Risk Index (h=f x g) Uncontrolled (U) / Controlled (C)	Comments and Recommendations
	(a)	(b)	(c)	(d)	(e)	(f)	(g)	(h)	
TT2-1	-2	N/A	N/A	N/A	-2 (U)	3	3 (T)	9 (U)	IROFS Required
TT2-1	-2	(IROFS1) -2	(IROFS2) -2	N/A	-6 (C)	1	3 (T)	3 (C)	Acceptable Risk
TT2-2	-2	N/A	N/A	N/A	-2 (U)	3	3 (T)	9 (U)	IROFS Required
TT2-2	-2	(IROFS38) -3	N/A	N/A	-5 (C)	1	3 (T)	3 (C)	Acceptable Risk
TT3-1	-2	N/A	N/A	N/A	-2 (U)	3	2 (T)	6 (U)	IROFS Required
TT3-1	-2	(IROFS3) -2	N/A	N/A	-4 (C)	2	2 (T)	4 (C)	Acceptable Risk
UF1-1	-2	N/A	N/A	N/A	-2 (U)	3	3 (T)	9 (U)	IROFS Required
UF1-1	-2	(IROFS4) -2	(IROFS5) -2	N/A	-6 (C)	1	3 (T)	3 (C)	Acceptable Risk
UF2-1	-2	N/A	N/A	N/A	-2 (U)	3	3 (T)	9 (U)	IROFS Required
UF2-1	-2	(IROFS1) -2	(IROFS2) -2	N/A	-6 (C)	1	3 (T)	3 (C)	Acceptable Risk
UF2-2	-2	N/A	N/A	N/A	-2 (U)	3	3 (T)	9 (U)	IROFS Required
UF2-2	-2	(IROFS38) -3	N/A	N/A	-5 (C)	1	3 (T)	3 (C)	Acceptable Risk
UF3-1	-2	N/A	N/A	N/A	-2 (U)	3	2 (T)	6 (U)	IROFS Required
UF3-1	-2	(IROFS3) -2	N/A	N/A	-4 (C)	2	2 (T)	4 (C)	Acceptable Risk
PT1-1	-4	N/A	N/A	N/A	-4 (U)	2	3 (CR)	6 (U)	IROFS Required
PT1-1	-4	(IROFS14) -3	N/A	N/A	-7 (C)	1	3 (CR)	3 (C)	Acceptable Risk
PT2-1	-2	N/A	N/A	N/A	-2 (U)	3	3 (T)	9 (U)	IROFS Required

Type of Accident – T for Chemical
CR for Criticality

Table 3.7-1 Accident Sequence and Risk Index

Accident Identifier	Initiating Event Index	Preventive Safety Parameter 1 or IROFS 1 Failure Index	Preventive Safety Parameter 2 or IROFS 2 Failure Index	Mitigation IROFS Failure Index	Likelihood Index T Uncontrolled (U) / Controlled (C)	Likelihood Category	Consequence Category (Type of Accident)	Risk Index (h=f x g) Uncontrolled (U) / Controlled (C)	Comments and Recommendations
	(a)	(b)	(c)	(d)	(e)	(f)	(g)	(h)	
PT2-1	-2	(IROFS1) -2	(IROFS2) -2	N/A	-6 (C)	1	3 (T)	3 (C)	Acceptable Risk
PT2-2	-2	N/A	N/A	N/A	-2 (U)	3	3 (CR)	9 (U)	IROFS Required
PT2-2	-2	(IROFS7) -3	N/A	N/A	-5 (C)	1	3 (CR)	3 (C)	Acceptable Risk
PT2-3	-2	N/A	N/A	N/A	-2 (U)	3	3 (CR)	9 (U)	IROFS Required
PT2-3	-2	(IROFS16) -3	N/A	N/A	-5 (C)	1	3 (CR)	3 (C)	Acceptable Risk
PT2-4	-2	N/A	N/A	N/A	-2 (U)	3	3 (T)	9 (U)	IROFS Required
PT2-4	-2	(IROFS38) -3	N/A	N/A	-5 (C)	1	3 (T)	3 (C)	Acceptable Risk
PT3-1	-2	N/A	N/A	N/A	-2 (U)	3	3 (CR)	9 (U)	IROFS Required
PT3-1	-2	(IROFS3) -2	(IROFS8) -2	N/A	-6 (C)	1	3 (CR)	3 (C)	Acceptable Risk
PT3-2	-2	N/A	N/A	N/A	-2 (U)	3	2 (T)	6 (U)	IROFS Required
PT3-2	-2	(IROFS3) -2	N/A	N/A	-4 (C)	2	2 (T)	4 (C)	Acceptable Risk
PT3-3	-2	N/A	N/A	N/A	-2 (U)	3	3 (CR)	9 (U)	IROFS Required
PT3-3	-2	(IROFS8) -2	(IROFS9) -2	N/A	-6 (C)	1	3 (CR)	3 (C)	Acceptable Risk
PT3-4	-4	N/A	N/A	N/A	-4 (U)	2	3 (CR)	6 (U)	IROFS Required
PT3-4	-4	(IROFS14) -3	N/A	N/A	-7 (C)	1	3 (CR)	3 (C)	Acceptable Risk
PT4-1	-4	N/A	N/A	N/A	-4 (U)	2	3 (CR)	6 (U)	IROFS Required
PT4-1	-4	(IROFS14) -3	N/A	N/A	-7 (C)	1	3 (CR)	3 (C)	Acceptable Risk
PB1-1	-2	N/A	N/A	N/A	-2 (U)	3	3 (T)	9 (U)	IROFS Required

Type of Accident – T for Chemical
CR for Criticality

Table 3.7-1 Accident Sequence and Risk Index

Accident Identifier	Initiating Event Index	Preventive Safety Parameter 1 or IROFS 1 Failure Index	Preventive Safety Parameter 2 or IROFS 2 Failure Index	Mitigation IROFS Failure Index	Likelihood Index T Uncontrolled (U) / Controlled (C)	Likelihood Category	Consequence Category (Type of Accident)	Risk Index (h=f x g) Uncontrolled (U) / Controlled (C)	Comments and Recommendations
	(a)	(b)	(c)	(d)	(e)	(f)	(g)	(h)	
PB1-1	-2	(IROFS4) -2	(IROFS5) -2	N/A	-6 (C)	1	3 (T)	3 (C)	Acceptable Risk
PB1-2	-2	N/A	N/A	N/A	-2 (U)	3	3 (CR)	9 (U)	IROFS Required
PB1-2	-2	(IROFS16) -3	N/A	N/A	-5 (C)	1	3 (CR)	3 (C)	Acceptable Risk
PB2-1	-2	N/A	N/A	N/A	-2 (U)	3	3 (T)	9 (U)	IROFS Required
PB2-1	-2	(IROFS1) -2	(IROFS2) -2	N/A	-6 (C)	1	3 (T)	3 (C)	Acceptable Risk
PB2-2	-2	N/A	N/A	N/A	-2 (U)	3	3 (CR)	9 (U)	IROFS Required
PB2-2	-2	(IROFS16) -3	N/A	N/A	-5 (C)	1	3 (CR)	3 (C)	Acceptable Risk
PB2-3	-2	N/A	N/A	N/A	-2 (U)	3	3 (CR)	9 (U)	IROFS Required
PB2-3	-2	(IROFS3) -2	(IROFS8) -2	N/A	-6 (C)	1	3 (CR)	3 (C)	Acceptable Risk
PB2-4	-2	N/A	N/A	N/A	-2 (U)	3	3 (T)	9 (U)	IROFS Required
PB2-4	-2	(IROFS38) -3	N/A	N/A	-5 (C)	1	3 (T)	3 (C)	Acceptable Risk
PB3-1	-2	N/A	N/A	N/A	-2 (U)	3	3 (CR)	9 (U)	IROFS Required
PB3-1	-2	(IROFS3) -2	(IROFS8) -2	N/A	-6 (C)	1	3 (CR)	3 (C)	Acceptable Risk
PB3-2	-2	N/A	N/A	N/A	-2 (U)	3	3 (CR)	9 (U)	IROFS Required
PB3-2	-2	(IROFS9) -2	(IROFS8) -2	N/A	-6 (C)	1	3 (CR)	3 (U)	Acceptable Risk
PB3-3	-2	N/A	N/A	N/A	-2 (U)	3	2 (T)	6 (U)	IROFS Required
PB3-3	-2	(IROFS3) -2	N/A	N/A	-4 (C)	2	2 (T)	4 (C)	Acceptable Risk
PB3-4	-4	N/A	N/A	N/A	-4 (U)	2	3 (CR)	6 (U)	IROFS Required
PB3-4	-4	(IROFS14) -3	N/A	N/A	-7 (C)	1	3 (CR)	3 (C)	Acceptable Risk
PB4-1	-2	N/A	N/A	N/A	-2 (U)	3	3 (T)	9 (U)	IROFS Required
PB4-1	-2	(IROFS10) -3	N/A	N/A	-5 (C)	1	3 (T)	3 (C)	Acceptable Risk

Type of Accident – T for Chemical
CR for Criticality

Table 3.7-1 Accident Sequence and Risk Index

Accident Identifier	Initiating Event Index	Preventive Safety Parameter 1 or IROFS 1 Failure Index	Preventive Safety Parameter 2 or IROFS 2 Failure Index	Mitigation IROFS Failure Index	Likelihood Index T Uncontrolled (U) / Controlled (C)	Likelihood Category	Consequence Category (Type of Accident)	Risk Index (h=f x g) Uncontrolled (U) / Controlled (C)	Comments and Recommendations
	(a)	(b)	(c)	(d)	(e)	(f)	(g)	(h)	
PB4-2	-2	N/A	N/A	N/A	-2 (U)	3	3 (T)	9 (U)	IROFS Required
PB4-2	-2	(IROFS11) -2	(IROFS12) -2	N/A	-6 (C)	1	3 (T)	3 (C)	Acceptable Risk
PB4-3	-2	N/A	N/A	N/A	-2 (U)	3	3 (T)	9 (U)	IROFS Required
PB4-3	-2	(IROFS10) -3	N/A	N/A	-5 (C)	1	3 (T)	3 (C)	Acceptable Risk
PB4-4	-2	N/A	N/A	N/A	-2 (U)	3	3 (T)	9 (U)	IROFS Required
PB4-4	-2	(IROFS42) -2	(IROFS10) -3	N/A	-7 (C)	1	3 (T)	3 (C)	Acceptable Risk
PB4-5	-2	N/A	N/A	N/A	-2 (U)	3	3 (CR)	9 (U)	IROFS Required
PB4-5	-2	(IROFS13) -2	(IROFS8) -2	N/A	-6 (C)	1	3 (CR)	3 (C)	Acceptable Risk
VR1-1	-2	N/A	N/A	N/A	-2 (U)	3	3 (CR)	9 (U)	IROFS Required
VR1-1	-2	(IROFS3) -2	(IROFS21) -2	N/A	-6 (C)	1	3 (CR)	3 (C)	Acceptable Risk
VR1-2	-2	N/A	N/A	N/A	-2 (U)	3	3 (CR)	9 (U)	IROFS Required
VR1-2	-2	(IROFS22) -2	(IROFS21) -2	N/A	-6 (C)	1	3 (CR)	3 (C)	Acceptable Risk
VR1-3	-2	N/A	N/A	N/A	-2 (U)	3	2 (T)	6 (U)	IROFS Required
VR1-3	-2	(IROFS23) -2	N/A	N/A	-4 (C)	2	2 (T)	4 (C)	Acceptable Risk
VR1-5	-2	N/A	N/A	N/A	-2 (U)	3	2 (T)	6 (U)	IROFS Required
VR1-5	-2	(IROFS3) -2	N/A	N/A	-4 (C)	2	2 (T)	4 (C)	Acceptable Risk
VR2-1	-2	N/A	N/A	N/A	-2 (U)	3	2 (T)	6 (U)	IROFS Required
VR2-1	-2	(IROFS23) -2	N/A	N/A	-4 (C)	2	2 (T)	4 (C)	Acceptable Risk
VR2-2	-2	N/A	N/A	N/A	-2 (U)	3	3 (T)	9 (U)	IROFS Required
VR2-2	-2	(IROFS23) -2	(IROFS24) -2	N/A	-6 (C)	1	3 (T)	3 (C)	Acceptable Risk
VR2-3	-3	N/A	N/A	N/A	-3 (U)	3	3 (CR)	9 (U)	IROFS Required

Type of Accident – T for Chemical
CR for Criticality

Table 3.7-1 Accident Sequence and Risk Index

Accident Identifier	Initiating Event Index	Preventive Safety Parameter 1 or IROFS 1 Failure Index	Preventive Safety Parameter 2 or IROFS 2 Failure Index	Mitigation IROFS Failure Index	Likelihood Index T Uncontrolled (U) / Controlled (C)	Likelihood Category	Consequence Category (Type of Accident)	Risk Index (h=f x g) Uncontrolled (U) / Controlled (C)	Comments and Recommendations
	(a)	(b)	(c)	(d)	(e)	(f)	(g)	(h)	
VR2-3	-3	(IROFS40) -3	N/A	N/A	-6 (C)	1	3 (CR)	3 (C)	Acceptable Risk
VR2-4	-3	N/A	N/A	N/A	-3 (U)	3	3 (CR)	9 (U)	IROFS Required
VR2-4	-3	(IROFS40) -3	N/A	N/A	-6 (C)	1	3 (CR)	3 (C)	Acceptable Risk
VR2-5	-2	N/A	N/A	N/A	-2 (U)	3	3 (CR)	9 (U)	IROFS Required
VR2-5	-2	(IROFS40) -3	N/A	N/A	-5 (C)	1	3 (CR)	3 (C)	Acceptable Risk
VR2-6	-2	N/A	N/A	N/A	-2 (U)	3	3 (CR)	9 (U)	IROFS Required
VR2-6	-2	(IROFS40) -3	N/A	N/A	-5 (C)	1	3 (CR)	3 (C)	Acceptable Risk
FR1-1	-2	N/A	N/A	N/A	-2 (U)	3	3 (CR)	9 (U)	IROFS Required
FR1-1	-2	(IROFS40) -3	N/A	N/A	-5 (C)	1	3 (CR)	3 (C)	Acceptable Risk
FR1-2	-2	N/A	N/A	N/A	-2 (U)	3	3 (CR)	9 (U)	IROFS Required
FR1-2	-2	(IROFS40) -3	N/A	N/A	-5 (C)	1	3 (CR)	3 (C)	Acceptable Risk
FR2-1	-2	N/A	N/A	N/A	-2 (U)	3	3 (CR)	9 (U)	IROFS Required
FR2-1	-2	(IROFS40) -3	N/A	N/A	-5 (C)	1	3 (CR)	3 (C)	Acceptable Risk
FR2-2	-2	N/A	N/A	N/A	-2 (U)	3	3 (CR)	9 (C)	IROFS Required
FR2-2	-2	(IROFS40) -3	N/A	N/A	-5 (C)	1	3 (CR)	3 (C)	Acceptable Risk
DS1-1	-2	N/A	N/A	N/A	-2 (U)	3	3 (CR)	9 (U)	IROFS Required
DS1-1	-2	(IROFS40) -3	N/A	N/A	-5 (C)	1	3 (CR)	3 (C)	Acceptable Risk
DS1-2	-2	N/A	N/A	N/A	-2 (U)	3	3 (CR)	9 (U)	IROFS Required

Type of Accident – T for Chemical
CR for Criticality

Table 3.7-1 Accident Sequence and Risk Index

Accident Identifier	Initiating Event Index	Preventive Safety Parameter 1 or IROFS 1 Failure Index	Preventive Safety Parameter 2 or IROFS 2 Failure Index	Mitigation IROFS Failure Index	Likelihood Index T Uncontrolled (U) / Controlled (C)	Likelihood Category	Consequence Category (Type of Accident)	Risk Index (h=f x g) Uncontrolled (U) / Controlled (C)	Comments and Recommendations
	(a)	(b)	(c)	(d)	(e)	(f)	(g)	(h)	
DS1-2	-2	(IROFS40) -3	N/A	N/A	-5 (C)	1	3 (CR)	3 (C)	Acceptable Risk
DS1-3	-2	N/A	N/A	N/A	-2 (U)	3	3 (CR)	9 (U)	IROFS Required
DS1-3	-2	(IROFS19) -3	N/A	N/A	-5 (C)	1	3 (CR)	3 (C)	Acceptable Risk
DS2-1	-2	N/A	N/A	N/A	-2 (U)	3	3 (CR)	9 (U)	IROFS Required
DS2-1	-2	(IROFS40) -3	N/A	N/A	-5 (C)	1	3 (CR)	3 (C)	Acceptable Risk
DS2-2	-2	N/A	N/A	N/A	-2 (U)	3	3 (CR)	9 (U)	IROFS Required
DS2-2	-2	(IROFS40) -3	N/A	N/A	-5 (C)	1	3 (CR)	3 (C)	Acceptable Risk
DS2-3	-2	N/A	N/A	N/A	-2 (U)	3	3 (CR)	9 (U)	IROFS Required
DS2-3	-2	(IROFS19) -3	N/A	N/A	-5 (C)	1	3 (CR)	3 (C)	Acceptable Risk
DS2-5	-2	N/A	N/A	N/A	-2 (U)	3	3 (CR)	9 (U)	IROFS Required
DS2-5	-2	(IROFS40) -3	N/A	N/A	-5 (C)	1	3 (CR)	3 (C)	Acceptable Risk
DS3-1	-2	N/A	N/A	N/A	-2 (U)	3	3 (CR)	9 (U)	IROFS Required
DS3-1	-2	(IROFS40) -3	N/A	N/A	-5 (C)	1	3 (CR)	3 (C)	Acceptable Risk
DS3-2	-2	N/A	N/A	N/A	-2 (U)	3	3 (CR)	9 (U)	IROFS Required
DS3-2	-2	(IROFS40) -3	N/A	N/A	-5 (C)	1	3 (CR)	3 (C)	Acceptable Risk
CL3-1	-2	N/A	N/A	N/A	-2 (U)	3	3 (CR)	9 (U)	IROFS Required
CL3-1	-2	(IROFS20) -2	(IROFS21) -2	N/A	-6 (C)	1	3 (CR)	3 (C)	Acceptable Risk
CL3-2	-2	N/A	N/A	N/A	-2 (U)	3	2 (T)	6 (U)	IROFS Required
CL3-2	-2	(IROFS24) -2	N/A	N/A	-4 (C)	2	2 (T)	4 (C)	Acceptable Risk
CL3-3	-2	N/A	N/A	N/A	-2 (U)	3	3 (T)	9 (U)	IROFS Required
CL3-3	-2	(IROFS43) -2	(IROFS24) -2	N/A	-6 (C)	1	3 (T)	3 (C)	Acceptable Risk
CP1-1	-2	N/A	N/A	N/A	-2 (U)	3	3 (CR)	9 (U)	IROFS Required

Type of Accident – T for Chemical
CR for Criticality

Table 3.7-1 Accident Sequence and Risk Index

Accident Identifier	Initiating Event Index	Preventive Safety Parameter 1 or IROFS 1 Failure Index	Preventive Safety Parameter 2 or IROFS 2 Failure Index	Mitigation IROFS Failure Index	Likelihood Index T Uncontrolled (U) / Controlled (C)	Likelihood Category	Consequence Category (Type of Accident)	Risk Index (h=f x g) Uncontrolled (U) / Controlled (C)	Comments and Recommendations
	(a)	(b)	(c)	(d)	(e)	(f)	(g)	(h)	
CP1-1	-2	(IROFS3) -2	(IROFS21) -2	N/A	-6 (C)	1	3 (CR)	3 (C)	Acceptable Risk
CP1-2	-2	N/A	N/A	N/A	-2 (U)	3	3 (CR)	9 (U)	IROFS Required
CP1-2	-2	(IROFS16) -3	N/A	N/A	-5 (C)	1	3 (CR)	3 (C)	Acceptable Risk
CP1-4	-2	N/A	N/A	N/A	-2 (U)	3	2 (T)	6 (U)	IROFS Required
CP1-4	-2	(IROFS3) -2	N/A	N/A	-4 (C)	2	2 (T)	4 (C)	Acceptable Risk
SW1-1	-2	N/A	N/A	N/A	-2 (U)	3	3 (CR)	9 (U)	IROFS Required
SW1-1	-2	(IROFS40) -3	N/A	N/A	-5 (C)	1	3 (CR)	3 (C)	Acceptable Risk
SW1-2	-2	N/A	N/A	N/A	-2 (U)	3	3 (CR)	9 (U)	IROFS Required
SW1-2	-2	(IROFS40) -3	N/A	N/A	-5 (C)	1	3 (CR)	3 (C)	Acceptable Risk
LW1-1	-2	N/A	N/A	N/A	-2 (U)	3	3 (CR)	9 (U)	IROFS Required
LW1-1	-2	(IROFS19) -3		N/A	-5 (C)	1	3 (CR)	3 (C)	Acceptable Risk
LW1-2	-2	N/A	N/A	N/A	-2 (U)	3	3 (CR)	9 (U)	IROFS Required
LW1-2	-2	(IROFS40) -3	N/A	N/A	-5 (C)	1	3 (CR)	3 (C)	Acceptable Risk
LW1-3	-2	N/A	N/A	N/A	-2 (U)	3	3 (CR)	9 (U)	IROFS Required
LW1-3	-2	(IROFS40) -3	N/A	N/A	-5 (C)	1	3 (CR)	3 (C)	Acceptable Risk
LW2-1	-2	N/A	N/A	N/A	-2 (U)	3	3 (CR)	9 (U)	IROFS Required
LW2-1	-2	(IROFS19) -3	N/A	N/A	-5 (C)	1	3 (CR)	3 (C)	Acceptable Risk
LW3-1	-2	N/A	N/A	N/A	-2 (U)	3	3 (CR)	9 (U)	IROFS Required
LW3-1	-2	(IROFS19) -3	N/A	N/A	-5 (C)	1	3 (CR)	3 (C)	Acceptable Risk
LW5-1	-2	N/A	N/A	N/A	-2 (U)	3	3 (CR)	9 (U)	IROFS Required
LW5-1	-2	(IROFS19) -3	N/A	N/A	-5 (C)	1	3 (CR)	3 (C)	Acceptable Risk
DC1-1	-2	N/A	N/A	N/A	-2 (U)	3	3 (T)	9 (U)	IROFS Required
DC1-1	-2	(IROFSC1) -3	(IROFS3) -2	N/A	-7 (U)	1	3 (T)	3 (C)	Acceptable Risk

Type of Accident – T for Chemical
CR for Criticality

Table 3.7-1 Accident Sequence and Risk Index

Accident Identifier	Initiating Event Index	Preventive Safety Parameter 1 or IROFS 1 Failure Index	Preventive Safety Parameter 2 or IROFS 2 Failure Index	Mitigation IROFS Failure Index	Likelihood Index T Uncontrolled (U) / Controlled (C)	Likelihood Category	Consequence Category (Type of Accident)	Risk Index (h=f x g) Uncontrolled (U) / Controlled (C)	Comments and Recommendations
	(a)	(b)	(c)	(d)	(e)	(f)	(g)	(h)	
DC1-2	0	N/A	N/A	N/A	0 (U)	3	2 (T)	6 (U)	IROFS Required
DC1-2	0	(IROFSC1) -3	(IROFS3) -2	N/A	-5 (U)	1	2 (T)	2 (C)	Acceptable Risk
DC1-3	-2	N/A	N/A	N/A	-2 (U)	3	3 (T)	9 (U)	IROFS Required
DC1-3	-2	(IROFSC1) -3	(IROFS3) -2	N/A	-7 (C)	1	3 (T)	3 (C)	Acceptable Risk
DC1-4	0	N/A	N/A	N/A	0 (U)	3	2 (T)	6 (U)	IROFS Required
DC1-4	0	(IROFSC1) -3	(IROFS3) -2	N/A	-5 (U)	1	2 (T)	2 (U)	Acceptable Risk
DC1-5	-4	N/A	N/A	N/A	-4	2	3 (T)	6 (U)	IROFS Required
DC1-5	-4	(IROFS3) -2	N/A	N/A	-6	1	3 (T)	3 (C)	Acceptable Risk
DC1-6	-2	N/A	N/A	N/A	-2	3	2 (T)	6 (U)	IROFS Required
DC1-6	-2	(IROFS3) -2	N/A	N/A	-4	2	2 (T)	4 (C)	Acceptable Risk
DC1-7	-4	N/A	N/A	N/A	-4	2	3 (T)	6 (U)	IROFS Required
DC1-7	-4	(IROFS3) -2	N/A	N/A	-6	1	3 (T)	3 (C)	Acceptable Risk
DC1-8	-2	N/A	N/A	N/A	-2	3	2 (T)	6 (U)	IROFS Required
DC1-8	-2	(IROFS3) -2	N/A	N/A	-4	2	2 (T)	4 (C)	Acceptable Risk
DC1-9	-2	N/A	N/A	N/A	-2 (U)	3	3 (CR)	9 (U)	IROFS Required
DC1-9	-2	(IROFS3) -2	(IROFSC1) -2	N/A	-6 (C)	1	3 (CR)	3 (C)	Acceptable Risk
EC3-1	-2	N/A	N/A	N/A	-2 (U)	3	3 (CR)	9 (U)	IROFS Required
EC3-1	-2	(IROFSC6) -2	(IROFSC7) -2	N/A	-6 (C)	1	3 (CR)	3 (C)	Acceptable Risk

Type of Accident – T for Chemical
CR for Criticality

Table 3.7-1 Accident Sequence and Risk Index

Accident Identifier	Initiating Event Index	Preventive Safety Parameter 1 or IROFS 1 Failure Index	Preventive Safety Parameter 2 or IROFS 2 Failure Index	Mitigation IROFS Failure Index	Likelihood Index T Uncontrolled (U) / Controlled (C)	Likelihood Category	Consequence Category (Type of Accident)	Risk Index (h=f x g) Uncontrolled (U) / Controlled (C)	Comments and Recommendations
	(a)	(b)	(c)	(d)	(e)	(f)	(g)	(h)	
EC4-1	-2	N/A	N/A	N/A	-2 (U)	3	2 (T)	6 (U)	IROFS Required
EC4-1	-2	(IROFS3) -2	N/A	N/A	-4 (C)	2	2 (T)	4 (C)	Acceptable Risk
EC4-2	-2	N/A	N/A	N/A	-2 (U)	3	3 (CR)	9 (U)	IROFS Required
EC4-2	-2	(IROFS3) -2	(IROFS8) -2	N/A	-6 (C)	1	3 (CR)	3 (C)	Acceptable Risk
EC6-1	-6	N/A	N/A	N/A	N/A	N/A	N/A	N/A	Not Credible Event
TP7-4	-3	N/A	N/A	N/A	-3 (U)	3	3 (CR)	9 (U)	IROFS Required
TP7-4	-3	(IROFSC14) -2	N/A	N/A	-5 (C)	1	3 (CR)	3 (C)	Acceptable Risk
TP8-1	-2	N/A	N/A	N/A	-2 (U)	3	3 (T)	9 (U)	IROFS Required
TP8-1	-2	(IROFSC15) -2	(IROFSC16) -2	N/A	-6 (C)	1	3 (T)	3 (C)	Acceptable Risk
TP8-2	-2	N/A	N/A	N/A	-2 (U)	3	2 (T)	6 (U)	IROFS Required
TP8-2	-2	(IROFS3) -2	N/A	N/A	-4 (C)	2	2 (T)	4 (C)	Acceptable Risk

Type of Accident – T for Chemical
CR for Criticality

Accident Identifier (See Table 3.7-1)	Description
	(Capitalization used for structures, systems, and components in this table may be different than other sections of the SAR. This difference is due to the greater level of descriptive detail of systems, structures, and components in this table and is considered acceptable since the difference involves no technical change.)
TT2-1	The initial failure (initiating event) is the tails low temperature take-off station cold box defrost heater controller failure, causing the cold box heater within the tails low temperature take-off station to remain on. For the uncontrolled accident sequence, the tails cylinder over heats and the cylinder hydraulically ruptures due to the expansion of the UF_6. Upon tails cylinder rupture, the tails cylinder content of UF_6 is released within the tails low temperature take-off station. Since the station enclosure is not air tight, the UF_6 is released to the UF_6 Handling Area. This sequence, if uncontrolled, would require a significant time to cause a UF_6 release since the heat up rate is limited by heater capacity. This event is assumed to have a high consequence to the worker and public. For the controlled accident sequence, the preventive measures are (1) an automatic fail-safe, hard-wired high temperature cold box heater trip (IROFS1) and (2) an automatic redundant independent fail-safe capillary high temperature cold box heater trip (IROFS2). The frequency index number for the initiating event was determined to be (-2). The NUREG-1520 criteria - no failures of this type in this facility in 30 yrs - applies. This failure frequency index was selected based on evidence from history of similarly designed Urenco European plants, which have a combined plant history of greater than 30 yrs, and have not had a failure of this type. A failure probability index of (-2) was selected for IROFS1. This corresponds to single active engineered IROFS per NUREG-1520. IROFS1 will be tested annually. A failure probability index of (-2) was selected for IROFS2. This corresponds to a single active engineered IROFS per NUREG-1520. IROFS2 will be tested annually.

Accident Identifier (See Table 3.7-1)	Description
TT2-2	The initial failure (initiating event) is the failure of the tails low temperature take-off station load cell causing the tails cylinder to be over filled. The over filled tails cylinder is then warmed to ambient and ruptures in the tails low temperature take-off station. Upon tails cylinder rupture UF_6 is released to the tails low temperature take-off station. Since the station enclosure is not air tight, UF_6 is released to the UF_6 Handling Area. This event is assumed to have a high consequence to the worker and public. For the controlled accident sequence, the preventive measure is an administrative control which has the operator verify the tails cylinder weight is within the expected range once per shift (IROFS38). The frequency index number for the initiating event was determined to be (-2). The NUREG-1520 criteria – no failures of this type in this facility in 30 years – applies. This failure frequency index was selected based on evidence from history of similarly designed Urenco European plants, which have a combined plant history of greater than 30 years, and have not had a failure of this type. The failure probability index of (-3) was selected for IROFS38. This corresponds to an administrative IROFS for routine planned operations per NUREG-1520. IROFS38 provides procedures and training for verification of cylinder weight. Training will be conducted annually.
TT3-1	The initial failure (initiating event) is the tails carbon trap becomes saturated with UF_6 caused by a small UF_6 leak through various process valves. For the uncontrolled accident sequence, a UF_6 plug forms on the discharge of the tails vacuum pump, causing high pressure and thus failing the tails vacuum pump discharge flange seal, causing a release of UF_6 to the UF_6 Handling Area. This event was calculated to result in an intermediate consequence to the worker.

Accident Identifier (See Table 3.7-1)	Description
TT3-1 (continued)	For the controlled accident sequence, the preventive measure is a fail-safe hard-wired high carbon trap weight trip of the vacuum pump (IROFS3). The frequency index number for the initiating event was determined to be (-2). The NUREG-1520 criteria – no failures of this type in this facility in 30 years – applies. This failure frequency index was selected based on evidence from history of similarly designed Urenco European plants, which have a combined plant history of greater than 30 years, and have not had a failure of this type. The failure probability index of (-2) was selected for IROFS3. This corresponds to a single active engineered IROFS per NUREG-1520. IROFS3 will be tested annually.
UF1-1	The initial failure (initiating event) is the solid feed station heater controller failure, causing the solid feed station heater within the solid feed station to remain on. For the uncontrolled accident sequence, the feed cylinder over heats and the cylinder hydraulically ruptures due to the expansion of the UF_6. Upon cylinder rupture, the feed cylinder content of UF_6 is released within the solid feed station. Since the station enclosure is not air tight, the UF_6 is released to the UF_6 Handling Area. This sequence, if uncontrolled, would require a significant time to cause a UF_6 release since the heat up rate is limited by the heater capacity. This event is assumed to have a high consequence to the worker and public. For the controlled accident sequence, the preventive measures are (1) a fail-safe hard-wired high temperature heater trip (IROFS4) and (2) a redundant independent fail-safe capillary high temperature solid feed station heater trip (IROFS5).

Accident Identifier (See Table 3.7-1)	Description
UF1-1 (continued)	The frequency index number for the initiating event was determined to be (-2). The NUREG-1520 criteria – no failures of this type in this facility in 30 yrs – applies. This failure frequency index was selected based on evidence from history of similarly designed Urenco European plants, which have a combined plant history of greater than 30 yrs, and have not had a failure of this type. The failure probability index of (-2) was selected for IROFS4. This corresponds to a single active engineered IROFS per NUREG-1520. IROFS4 will be tested annually. The failure probability index of (-2) was selected for IROFS5. This corresponds to a single active engineered IROFS per NUREG-1520. IROFS5 will be tested annually.
UF2-1	The initial failure (initiating event) is the feed purification low temperature take-off station defrost heater controller failure, causing the defrost heater within the feed purification low temperature take-off station to remain on. For the uncontrolled accident sequence, the feed purification cylinder over heats and the cylinder hydraulically ruptures due to the expansion of the UF_6. Upon cylinder rupture, the feed purification cylinder content of UF_6 is released within the feed purification station. Since the station enclosure is not air tight, the UF_6 is released to the UF_6 Handling Area exposing workers and the public. This sequence, if uncontrolled, would require a significant time to cause a UF_6 release since the heat up rate is limited by heater capacity. This event is assumed to have a high consequence to the worker and to the public. For the controlled accident sequence, the preventive measures are: (1) a fail-safe hard-wired high temperature defrost heater trip (IROFS1), (2) a redundant independent fail-safe capillary high temperature defrost heater trip (IROFS2).

Accident Identifier (See Table 3.7-1)	Description
UF2-1 (continued)	The frequency index number for the initiating event was determined to be (-2). The NUREG-1520 criteria – no failures of this type in this facility in 30 yrs – applies. This failure frequency index was selected based on evidence from history of similarly designed Urenco European plants, which have a combined plant history of greater than 30 yrs, and have not had a failure of this type. The failure probability index of (-2) was selected for IROFS1. This corresponds to a single active engineered IROFS per NUREG-1520. IROFS1 will be tested annually. The failure probability index of (-2) was selected for IROFS2. This corresponds to a single active engineered IROFS per NUREG-1520. IROFS2 will be tested annually.
UF2-2	The initial failure (initiating event) is the failure of the feed purification low temperature take-off station load cell causing the cylinder to be over filled. For the uncontrolled accident sequence, the over filled cylinder is warmed up to ambient and ruptures in the feed purification low temperature take-off station. Upon cylinder rupture, UF_6 is released to the feed purification low temperature take-off station. Since the station enclosure is not air tight, the UF_6 is released to the UF_6 Handling Area. This event is assumed to have a high consequence to the worker and public. For the controlled accident sequence, the preventive measure is an administrative control which has the operator verify the cylinder weight is within the expected range once per shift (IROFS38). The frequency index number for the initiating event was determined to be (-2). The NUREG-1520 criteria – no failures of this type in this facility in 30 years – applies. This failure frequency index was selected based on evidence from history of similarly designed Urenco European plants, which have a combined plant history of greater than 30 years, and have not had a failure of this type.

Accident Identifier (See Table 3.7-1)	**Description**
UF2-2 (continued)	The failure probability index of (-3) was selected for IROFS38. This corresponds to an administrative IROFS for routine planned operations per NUREG-1520. IROFS38 provides procedures and training for verification of cylinder weight. Training will be conducted annually.
UF3-1	The initial failure (initiating event) is the feed purification carbon trap becomes saturated with UF_6 caused by a small UF_6 leak through a cold trap outlet isolation valve. For the uncontrolled accident sequence, a UF_6 plug forms on the discharge of the feed purification vacuum pump, causing high pressure and thus failing the feed purification vacuum pump discharge flange seal, causing a release of UF_6 to the UF_6 Handling Area. This event was calculated to have an intermediate consequence to the worker. For the controlled accident sequence, the preventive measure is a fail-safe hard-wired high carbon trap weight trip of the vacuum pump (IROFS3). The frequency index number for the initiating event was determined to be (-2). The NUREG-1520 criteria – no failures of this type in this facility in 30 yrs – applies. This failure frequency index was selected based on evidence from history of similarly designed Urenco European plants, which have a combined plant history of greater than 30 yrs, and have not had a failure of this type. The failure probability index of (-2) was selected for IROFS3. This corresponds to a single active engineered IROFS per NUREG-1520. IROFS3 will be tested annually.

Accident Identifier (See Table 3.7-1)	Description
PT1-1	The accident sequence is the failure of numerous components/systems/procedures leading to a criticality in a product pump being transported for maintenance. This description of this sequence is the following: (1) The pump would have to fail while being connected to the plant, and (2) The pump would have to develop an undetected leak to atmosphere (as applicable), which would introduce moisture, i.e. moderator, and (3) UF_6 would have to flow, against the pressure gradient, into the pump, through the closed valves used to isolate the pump from the plant, and (4) The failed pump would have to stay connected to the plant long enough to fill completely with moderated UF_6 breakdown product, and (5) The pump would have to approach another plant component that contained an appreciable quantity of moderated enriched uranium (i.e., failure of IROFS15). The movement of pumps is part of normal operations; the abnormal operating condition pertaining to the pump concerns the assumption that the pump and interacting component components are filled with UF_6 breakdown material at optimum moderation conditions. This would be extremely unlikely for a single pump and even more unlikely for more than one component, and would be quickly noticed. For the uncontrolled accident sequence, the pump containing fissile material resulting from failures (1) through (4) above, is allowed to interact with another component that contains fissile material resulting in an assumed criticality event. A criticality event is assumed to result in a high consequence to the worker and public. For the controlled accident sequence, the preventive measure is a passive engineered pump transfer frame that ensures a physical spacing separation of the pump from other vessels potentially containing enriched uranium (IROFS14).

Accident Identifier (See Table 3.7-1)	Description
PT1-1 (continued)	The frequency index number for the initiating event, based on the combination of (1) through (5) above, was conservatively assumed to be (-4). The NUREG-1520 criteria – No failures in 30 yrs for hundreds of similar IROFS in the industry applies. The failure frequency index was conservatively selected based on evidence from history of similarly designed Urenco European plants, with a combined plant history of greater than 30 yrs, with hundreds of similar evolutions per year, and have not had any criticality events. A failure probability index of (-3) was selected for IROFS14. This corresponds to a single passive engineered IROFS per NUREG-1520. IROFS14 will be inspected annually. The detailed description of the interaction evaluations supporting the criticality safety requirements, associated safety margins and analysis assumptions is found in Chapter 5, Nuclear Criticality Safety.
PT2-1	The initial failure (initiating event) is the product low temperature take-off station cold box defrost heater controller failure, causing the cold box heater within the product low temperature take-off station to remain on. For the uncontrolled accident sequence, the product cylinder over heats and the cylinder hydraulically ruptures due to the expansion of the UF_6. Upon product cylinder rupture, the product cylinder content of UF_6 is released within the product low temperature take-off station. Since the station enclosure is not air tight, the UF_6 is released to the UF_6 Handling Area. This sequence, if uncontrolled, would require a significant time to cause a UF_6 release since the heat up rate is limited by heater capacity. This event is assumed to have a high consequence to the worker and public. For the controlled accident sequence, the preventive measures are (1) an automatic fail-safe, hard-wired high temperature cold box heater trip (IROFS1), (2) an automatic redundant independent fail-safe capillary high temperature cold box heater trip (IROFS2).

Accident Identifier (See Table 3.7-1)	Description
PT2-1 (continued)	The frequency index number for the initiating event was determined to be (-2). The NUREG-1520 criteria - no failures of this type in this facility in 30 yrs - applies. This failure frequency index was selected based on evidence from history of similarly designed Urenco European plants, which have a combined plant history of greater than 30 yrs, and have not had a failure of this type. A failure probability index of (-2) was selected for IROFS1. This corresponds to single active engineered IROFS per NUREG-1520. IROFS1 will be tested annually. A failure probability index of (-2) was selected for IROFS2. This corresponds to a single active engineered IROFS per NUREG-1520. IROFS2 will be tested annually.
PT2-2	The initial failure (initiating event) is a failure of administrative controls associated with cylinder management. This failure could result in an operator attempting to insert a full 48Y product cylinder into a solid feed station with the potential of a criticality event. For the uncontrolled accident sequence, a product cylinder (48Y) is placed in a feed station thus causing enrichment higher than licensed limits. A criticality event is assumed to result for this accident sequence. This event is assumed to result in a high consequence to the worker and public. For the controlled accident sequence, the preventive measure is a passive engineered design to prevent the product cylinder from being placed in the solid feed station (IROFS7). The frequency index number for the initiating event was determined to be (-2). The NUREG-1520 criteria – no failures of this type in this facility in 30 yrs – applies. This failure frequency index was selected based on evidence from history of similarly designed Urenco European plants, which have a combined plant history of greater than 30 yrs, and have not had a failure of this type. The failure probability index number for (IROFS7) was determined to be (-3), a single passive engineered IROFS consistent with NUREG-1520. IROFS7 will be inspected annually.

Accident Identifier (See Table 3.7-1)	Description
PT2-3	The initial failure (initiating event) is excessive moderator being introduced into a product cylinder after the cylinder is put into the product take-off station with the potential for a criticality event. The condition that needs to be fulfilled to result in a criticality event due to moderator ingress in a product cylinder after being put in the take-off station is the operator must fail to track the number of venting operations on the cylinder and a significant number of venting operations would have to be made to introduce enough moderation into the cylinder to create conditions favorable for criticality. The detailed description of the moderator control measures supporting the criticality safety requirements, associated safety margins and analysis assumptions used in determining moderator content in a cylinder is found in Chapter 5. For the uncontrolled accident sequence, moderator ingress (moisture in-leakage) via the product take-off system enters a product cylinder. A criticality event is assumed to result for this accident sequence. This event is assumed to result in a high consequence to the worker and public. For the controlled accident sequence, the preventive measure is administrative controls for the cylinder moderator control program (IROFS16) that include venting control and tracking of individual cylinders and an operator training program for the handling of cylinders. The frequency index number for the initiating event was determined to be (-2). The NUREG-1520 criteria - no failures of this type in this facility in 30 yrs - applies. This failure frequency index was selected based on evidence from history of similarly designed Urenco European plants, which have a combined plant history of greater than 30 yrs, and have not had a failure of this type. The failure probability index number for the administrative control of the cylinder moderator control program (IROFS16) was determined to be (-3), an administrative IROFS for routine planned operations consistent with NUREG-1520. IROFS16 provides procedures and training for the cylinder moderator control program. Training will be conducted annually.

Accident Identifier (See Table 3.7-1)	Description
PT2-4	The initial failure (initiating event) is the failure of the product low temperature take-off station load cell causing the cylinder to be over filled. For the uncontrolled accident sequence, the over filled cylinder is then warmed up to ambient and ruptures in the product low temperature take-off station. Upon cylinder rupture, UF_6 is released to the product low temperature take-off station. Since the station enclosure is not air tight, the UF_6 is released to the UF_6 Handling Area. This event is assumed to have a high consequence to the worker and public. For the controlled accident sequence, the preventive measure is an administrative control which has the operator verify the cylinder weight is within the specified limits once per shift (IROFS38). The frequency index number for the initiating event was determined to be (-2). The NUREG-1520 criteria – no failures of this type in this facility in 30 years – applies. This failure frequency index was selected based on evidence from history of similarly designed Urenco European plants, which have a combined plant history of greater than 30 years, and have not had a failure of this type. A failure probability index of (-3) was selected for IROFS38. This corresponds to an administrative IROFS for routine planned operations per NUREG-1520. IROFS38 provides procedures and training for verification of cylinder weight. Training will be conducted annually.
PT3-1	The initial failure (initiating event) is the product vent system carbon trap becomes saturated with UF_6 caused by a small UF_6 leak through a product cold trap outlet valve causing UF_6 to be released into the Separations Building (SB) Gaseous Effluent Vent System (GEVS) with the potential for a criticality event. The combination of conditions, that would lead to an accumulation of fissile material on the SB GEVS filters or electrostatic precipitator resulting in a criticality event are: (1) The product cold trap outlet valve leaks, and

Accident Identifier (See Table 3.7-1)	Description
PT3-1 (continued)	(2) The carbon trap becomes saturated, and (3) The leak into the SB GEVS system must exist for a significant period of time to allow a sufficient amount of accumulation on the filters or electrostatic precipitators to form a critical mass. The detailed description of the criticality safety evaluations, associated safety margins and analysis assumptions used in determining the conditions for criticality is found in Chapter 5. For the uncontrolled accident sequence, UF_6 (product) is discharged to the SB GEVS and is collected on the SB GEVS HEPA filters or electrostatic precipitator forming a critical mass of fissile material on the filter over a long period of time. A criticality event is assumed to result for this accident sequence. This event is assumed to have a high consequence to the worker and public. For the controlled accident sequence, the preventive measures are (1) a fail-safe hard-wired high carbon trap weight trip of the vacuum pump (IROFS3) and (2) a ^{235}U selective gamma monitor system that monitors the SB GEVS filters and electrostatic precipitator and trips the operating SB GEVS and automatically starts the standby SB GEVS train if Hi-Hi gamma levels are detected in the SB GEVS filters and bypasses and isolates the electrostatic precipitator if Hi-Hi gamma levels are detected in the electrostatic precipitator (IROFS8). The frequency index number for the initiating event was determined to be (-2). The NUREG-1520 criteria – no failures of this type in this facility in 30 yrs – applies. This failure frequency index was selected based on evidence from history of similarly designed Urenco European plants, which have a combined plant history of greater than 30 yrs, and have not had a failure of this type. A failure probability index of (-2) was selected for IROFS3. This corresponds to a single active engineered IROFS per NUREG-1520 criteria. IROFS3 will be tested annually. A failure probability index of (-2) was selected for IROFS8. This corresponds to a single active engineered IROFS per NUREG-1520 criteria. IROFS8 will be tested annually.

Accident Identifier (See Table 3.7-1)	Description
PT3-2	The initial failure (initiating event) is the product vent subsystem carbon trap becoming saturated with UF_6 caused by a small UF_6 leak through a product cold trap valve. For the uncontrolled accident sequence, a UF_6 plug forms on the discharge of the vacuum pump, causing high pressure in the vacuum pump and thus failing seals leading to a release of UF_6 to the UF_6 Handling Area. This event has been calculated to result in an intermediate consequence to the worker. For the controlled accident sequence, the preventive measure is a fail-safe, hard-wired, high carbon trap weight trip of the vacuum pump (IROFS3). The frequency index number for the initiating event was determined to be (-2). The NUREG-1520 criteria – no failures of this type in this facility in 30 years – applies. This failure frequency index was selected based on evidence from history of similarly designed Urenco European plants, which have a combined plant history of greater than 30 years, and have not had a failure of this type. A failure probability index of (-2) was selected for IROFS3. This corresponds to a single active engineered IROFS per NUREG-1520 criteria. IROFS3 will be tested annually.
PT3-3	The initial failure (initiating event) is the UF_6 cold trap outlet valve fails open during the back gas mode. A high UF_6 flows to the carbon trap resulting in high temperature in the carbon trap and release of UF_6 into the SB GEVS with the potential of a criticality event. The combination of conditions, that would lead to an accumulation of fissile material on the SB GEVS filters or electrostatic precipitator resulting in a criticality event are: (1) The vent cold trap outlet valve fails open, and

Accident Identifier (See Table 3.7-1)	Description
PT3-3 (continued)	(2) The carbon trap becomes saturated, and (3) The leak into the SB GEVS system must exist for a significant period of time to allow a sufficient amount of accumulation on the filters or electrostatic precipitators to form a critical mass. The detailed description of the criticality safety evaluations, associated safety margins and analysis assumptions used in determining the conditions for criticality is found in Chapter 5. For the uncontrolled accident sequence, UF_6 (product) is discharged to the SB GEVS and is collected on the SB GEVS HEPA filters or electrostatic precipitator forming a critical mass of fissile material on the filter over a long period of time. A criticality event is assumed to result for this accident sequence. This event is assumed to have a high consequence to the worker and public. For the controlled accident sequence, the preventive measures are (1) a high carbon trap temperature alarm in the control room, resulting in an operator response to isolate the product vent system from the GEVS (IROFS9) and (2) a ^{235}U selective gamma monitor system that monitors the SB GEVS filters and electrostatic precipitator and trips the operating SB GEVS and automatically starts the standby SB GEVS train if Hi-Hi gamma levels are detected in the SB GEVS filters and bypasses and isolates the electrostatic precipitator if Hi-Hi gamma levels are detected in the electrostatic precipitator (IROFS8). The frequency index number for the initiating event was determined to be (-2). The NUREG-1520 criteria – no failures of this type in this facility in 30 yrs – applies. This failure frequency index was selected based on evidence from history of similarly designed Urenco European plants, which have a combined plant history of greater than 30 yrs, and have not had a failure of this type. A failure probability index of (-2) was selected for IROFS9. This corresponds to an enhanced administrative IROFS per NUREG-1520 criteria. IROFS9 provides procedures and training for response to a high temperature in the carbon trap. Training will be conducted annually. In addition, testing of the carbon trap high temperature alarm will be performed annually.

Accident Identifier (See Table 3.7-1)	Description
PT3-3 (continued)	A failure probability index of (-2) was selected for IROFS8. This corresponds to a single active engineered IROFS per NUREG-1520 criteria. IROFS8 will be tested annually.
PT3-4	The description for this accident sequence is identical to sequence PT1-1 with the exception that this sequence applies to the movement of vacuum pumps instead of product pumps.
PT4-1	The description for this accident sequence is identical to sequence PT1-1 with the exception that this sequence applies to the movement of vacuum pumps instead of product pumps.
PB1-1	The initial failure (initiating event) is the blending donor station heater controller fails causing the heater within the blending donor station to remain on. For the uncontrolled accident sequence, the donor cylinder over heats and the cylinder hydraulically ruptures due to the expansion of the UF_6. Upon cylinder rupture, the donor cylinder content of UF_6 is released within the donor station. Since the station enclosure is not air tight, the UF_6 is released to the Blending and Liquid Sampling Area. This sequence, if uncontrolled, would require significant time to cause a UF_6 release since the heat up rate is limited by the heater capacity. This event is assumed to have a high consequence to the worker and public. For the controlled accident sequence, the preventive measures are (1) a fail-safe hard-wired high temperature heater trip (IROFS4), (2) a redundant independent fail-safe capillary high temperature heater trip (IROFS5). The frequency index number for the initiating event was determined to be (-2). The NUREG-1520 criteria – no failures of this type in this facility in 30 yrs – applies. This failure frequency index was selected based on evidence from history of similarly designed Urenco European plants, which have a combined plant history of greater than 30 yrs, and have not had a failure of this type.

Accident Identifier (See Table 3.7-1)	Description
PB1-1 (continued)	The failure probability index of (-2) was selected for IROFS4. This corresponds to a single active engineered IROFS per NUREG-1520. IROFS4 will be tested annually. The failure probability index of (-2) was selected for IROFS5. This corresponds to a single active engineered IROFS per NUREG-1520. IROFS5 will be tested annually.
PB1-2	The initial failure (initiating event) is excessive moderator in the donor cylinder after being put into the donor station with the potential for a criticality event. The combination of conditions, that needs to be fulfilled to result in a criticality event due to moderator in a donor cylinder after being put in the take-off station include the following: (1) The operator must fail to track the number of venting operations on the cylinder and a significant number of venting operations would have to be made to introduce enough moderation into the cylinder to create conditions favorable for criticality. (2) Moderator at or near the maximum limits from other sources would have to be present in the cylinder prior to loading the cylinder into the station and the presence of this moderator must fail to be detected by multiple administrative processes. The detailed description of the moderator control measures supporting the criticality safety requirements, associated safety margins and analysis assumptions used in determining moderator content in a cylinder is found in Chapter 5. For the uncontrolled accident sequence, moderator in the donor cylinder is introduced while the cylinder is in the donor station. A criticality event is assumed to result for this accident sequence. This event is assumed to result in a high consequence to the worker and public.

Accident Identifier (See Table 3.7-1)	Description
PB1-2 (continued)	For the controlled accident sequence, the preventive measure is an administrative control for the cylinder moderator control program (IROFS16) that includes visual inspection of cylinders in the Cylinder Receipt and Dispatch Building (CRDB), weighing of cylinders, vacuum testing of cylinders, heel declarations of cylinders, venting control and tracking of individual cylinders and an operator training program for the handling of cylinders. The frequency index number for the initiating event was determined to be (-2). The NUREG-1520 criteria - no failures of this type in this facility in 30 years - applies. This failure frequency index was selected based on evidence from history of similarly designed Urenco European plants, which have a combined plant history of greater than 30 years, and have not had a failure of this type. The failure probability index number for the administrative control for the cylinder moderator control program (IROFS16) was determined to be (-3), an administrative IROFS for routine planned operations consistent with NUREG-1520. IROFS16 provides procedures and training for the cylinder moderator control program. Training will be conducted annually.
PB2-1	The initial failure (initiating event) is the blending receiver station cold box defrost heater controller failure, causing the heater within the receiver station to remain on. For the uncontrolled accident sequence, the product cylinder over heats and the cylinder hydraulically ruptures due to the expansion of the UF_6. Upon product cylinder rupture, the product cylinder content of UF_6 is released within the receiver station. Since the station enclosure is not air tight, the UF_6 is released to the Blending and Liquid Sampling Area. This sequence, if uncontrolled, would require a significant time to cause a UF_6 release since the heat up is limited by heater capacity. This event is assumed to have a high consequence to the worker and public.

Accident Identifier (See Table 3.7-1)	Description
PB2-1 (continued)	For the controlled accident sequence, the preventive measures are (1) an automatic fail-safe, hard-wired high temperature cold box heater trip (IROFS1), (2) an automatic redundant independent fail-safe capillary high temperature cold box heater trip (IROFS2). The frequency index number for the initiating event was determined to be (-2). The NUREG-1520 criteria - no failures of this type in this facility in 30 yrs - applies. This failure frequency index was selected based on evidence from history of similarly designed Urenco European plants, which have a combined plant history of greater than 30 yrs, and have not had a failure of this type. A failure probability index of (-2) was selected for IROFS1. This corresponds to single active engineered IROFS per NUREG-1520. IROFS1 will be tested annually. A failure probability index of (-2) was selected for IROFS2. This corresponds to a single active engineered IROFS per NUREG-1520. IROFS2 will be tested annually.
PB2-2	The initial failure (initiating event) is moderator in the receiver cylinder before being put in the blending receiver station with the potential for a criticality event. The initial set of conditions, or combination of conditions, that needs to be fulfilled to result in a criticality event due to moderator being present in a receiver cylinder before being put in the receiver station include the following: (1) The operator must fail to weigh the cylinder or not notice that the weight of the cylinder exceeds its weight tolerance given by the vendor. (2) During visual inspection of the cylinder there must be a failure to recognize that significant moderator was present in the cylinder.

Accident Identifier (See Table 3.7-1)	Description
PB2-2 (continued)	(3) During vacuum testing of the cylinder, after connection to the plant, the operator must fail to recognize the increased pressure in the cylinder due to the presence of moderator in the cylinder is within acceptable limits. (4) The cylinder must fail the cylinder suppliers' maintenance requirements to meet the applicable version of ANSI N14.1, "Uranium Hexafluoride – Packaging for Transport." The detailed description of the moderator control measures supporting the criticality safety requirements associated safety margins and analysis assumptions are found in Chapter 5. For the uncontrolled accident sequence, moderator is introduced into the receiver cylinder prior to the cylinder being put into the receiver station. A criticality event is assumed to result for this accident sequence. This event is assumed to result in a high consequence to the worker and public. For the controlled accident sequence, the preventive measure is an administrative control for the cylinder moderator control program (IROFS16) that includes visual inspection of cylinders, weighing of cylinders, vacuum testing of cylinders, heel declarations of cylinders, venting control and tracking of individual cylinders, and an operator training program for the handling of cylinders. The frequency index number for the initiating event was determined to be (-2). The NUREG-1520 criteria - no failures of this type in this facility in 30 yrs - applies. This failure frequency index was selected based on evidence from history of similarly designed Urenco European plants, which have a combined plant history of greater than 30 yrs, and have not had a failure of this type. The failure probability index number for the administrative control for the cylinder moderator control program (IROFS16) was determined to be (-3), an administrative IROFS for routine planned operations consistent with NUREG-1520. IROFS16 provides procedures and training for the cylinder moderator control program. Training will be conducted annually.

Accident Identifier (See Table 3.7-1)	Description
PB2-3	The initial failure (initiating event) is the product blending system carbon trap becomes saturated with UF_6 caused by a small UF_6 leak through the cold trap valve causing UF_6 to be released into the SB GEVS with the potential for a criticality event. The combination of conditions, that would lead to an accumulation of fissile material on the SB GEVS filters or electrostatic precipitator resulting in a criticality event are: (1) The cold trap outlet valve leaks, and (2) The carbon trap becomes saturated, and (3) The leak into the SB GEVS system must exist for a significant period of time to allow a sufficient amount of accumulation on the filters or electrostatic precipitator to form a critical mass. The detailed description of the criticality safety evaluations, associated safety margins and analysis assumptions used in determining the conditions for criticality is found in Chapter 5. For the uncontrolled accident sequence, UF_6 (Product) is discharged to the SB GEVS and is collected on the SB GEVS HEPA filters or electrostatic precipitator forming a critical mass of fissile material on the filter over a long period of time. A criticality event is assumed to result for this accident sequence. This event is assumed to have a high consequence to the worker and public. For the controlled accident sequence, the preventive measures are (1) a fail-safe hard-wired high carbon trap weight trip of the vacuum pump (IROFS3) and (2) a ^{235}U selective gamma monitor system that monitors the SB GEVS filters and electrostatic precipitator and trips the operating SB GEVS and automatically starts the standby SB GEVS train if Hi-Hi gamma levels are detected in the SB GEVS filters and bypasses and isolates the electrostatic precipitator if Hi-Hi gamma levels are detected in the electrostatic precipitator (IROFS8). The frequency index number for the initiating event was determined to be (-2). The NUREG-1520 criteria –

Accident Identifier (See Table 3.7-1)	Description
PB2-3 (continued)	no failures of this type in this facility in 30 yrs – applies. This failure frequency index was selected based on evidence from history of similarly designed Urenco European plants, which have a combined plant history of greater than 30 yrs, and have not had a failure of this type. A failure probability index of (-2) was selected for IROFS3. This corresponds to a single active engineered IROFS per NUREG-1520 criteria. IROFS3 will be tested annually. A failure probability index of (-2) was selected for IROFS8. This corresponds to a single active engineered IROFS per NUREG-1520 criteria. IROFS8 will be tested annually.
PB2-4	The initial failure (initiating event) is the failure of the blending receiver low temperature take-off station load cell causing the cylinder to be over filled. For the uncontrolled sequence, the over filled cylinder is then warmed up to ambient and ruptures in the blending receiver low temperature take-off station. Upon cylinder rupture, UF_6 is released to the blending receiver low temperature take-off station. Since the station enclosure is not air tight, the UF_6 is released to the Blending and Liquid Sampling Area. This event is assumed to have a high consequence to the worker and public. For the controlled accident sequence, the preventive measure is an administrative control which has the operator verify the cylinder weight is within the expected range once per shift (IROFS38). The frequency index number for the initiating event was determined to be (-2). The NUREG-1520 criteria – no failures of this type in this facility in 30 yrs – applies. This failure frequency index was selected based on evidence from history of similarly designed Urenco European plants, which have a combined plant history of greater than 30 yrs, and have not had a failure of this type. The failure probability index of (-3) was selected for IROFS38. This corresponds to an administrative IROFS for routine planned operations per NUREG-1520. IROFS38 provides procedures and training for verification of cylinder weight. Training will be conducted annually.

Accident Identifier (See Table 3.7-1)	Description
PB3-1	The initial failure (initiating event) is the blending vent system carbon trap becomes saturated with UF_6 caused by a small UF_6 leak through the cold trap valve causing UF_6 to be released into the SB GEVS with the potential for a criticality event. The combination of conditions, that would lead to an accumulation of fissile material on the SB GEVS filters or electrostatic precipitator resulting in a criticality event are: (1) The cold trap outlet valve leaks, and (2) The carbon trap becomes saturated, and (3) The leak into the SB GEVS system must exist for a significant period of time to allow a sufficient amount of accumulation on the filters or electrostatic precipitator to form a critical mass. The detailed description of the criticality safety evaluations, associated safety margins and analysis assumptions used in determining the conditions for criticality is found in Chapter 5. For the uncontrolled accident sequence, UF_6 (Product) is discharged to the SB GEVS and is collected as UO_2F_2 on the SB GEVS HEPA filters or electrostatic precipitator forming a critical mass of fissile material on the filter or within the precipitator over a long period of time. A criticality event is assumed to result for this accident sequence. This event is assumed to have a high consequence to the worker and public. For the controlled accident sequence, the preventive measures are (1) a fail-safe hard-wired high carbon trap weight trip of the vacuum pump (IROFS3) and (2) a ^{235}U selective gamma monitor system that monitors the SB GEVS filters and electrostatic precipitator and trips the operating SB GEVS and automatically starts the standby SB GEVS train if Hi-Hi gamma levels are detected in the SB GEVS filters and bypasses and isolates the electrostatic precipitator if Hi-Hi gamma levels are detected in the electrostatic precipitator (IROFS8). The frequency index number for the initiating event was determined to be (-2). The NUREG-1520 criteria –

Accident Identifier (See Table 3.7-1)	Description
PB3-1 (continued)	no failures of this type in this facility in 30 yrs – applies. This failure frequency index was selected based on evidence from history of similarly designed Urenco European plants, which have a combined plant history of greater than 30 yrs, and have not had a failure of this type. A failure probability index of (-2) was selected for IROFS3. This corresponds to a single active engineered IROFS per NUREG-1520 criteria. IROFS3 will be tested annually. A failure probability index of (-2) was selected for IROFS8. This corresponds to a single active engineered IROFS per NUREG-1520 criteria. IROFS8 will be tested annually.
PB3-2	The initial failure (initiating event) is the UF_6 cold trap outlet valve fails open during the back gas mode. A high UF_6 flow to the carbon trap results in high temperature in the carbon trap which becomes saturated with UF_6 caused by the high flow through the cold trap valve. UF_6 is then released into the SB GEVS with the potential for a criticality event. The combination of conditions, that would lead to an accumulation of fissile material on the SB GEVS filters or electrostatic precipitator resulting in a criticality event are: (1) The Product Blending Vent cold trap outlet valve fails open, and (2) The carbon trap becomes saturated, and (3) The leak into the SB GEVS system must exist for a significant period of time to allow a sufficient amount of accumulation on the filters or electrostatic precipitator to form a critical mass. The detailed description of the criticality safety evaluations, associated safety margins and analysis assumptions used in determining the conditions for criticality is found in Chapter 5. For the uncontrolled accident sequence, UF_6 (Product) is discharged to the SB GEVS and is collected as UO_2F_2 on the SB GEVS HEPA filters or electrostatic precipitator forming a critical mass of fissile material on

Accident Identifier (See Table 3.7-1)	Description
PB3-2 (continued)	the filter or within the precipitator over a long period of time. A criticality event is assumed to result for this accident sequence. This event is assumed to have a high consequence to the worker and public. For the controlled accident sequence, the preventive measures are (1) a high carbon trap temperature alarm in the control room, resulting in an operator response to isolate the vent system from the SB GEVS (IROFS9) and (2) a ^{235}U selective gamma monitor system that monitors the SB GEVS filters and electrostatic precipitator and trips the operating SB GEVS and automatically starts the standby SB GEVS train if Hi-Hi gamma levels are detected in the SB GEVS filters and bypasses and isolates the electrostatic precipitator if Hi-Hi gamma levels are detected in the electrostatic precipitator (IROFS8). The frequency index number for the initiating event was determined to be (-2). The NUREG-1520 criteria – no failures of this type in this facility in 30 yrs – applies. This failure frequency index was selected based on evidence from history of similarly designed Urenco European plants, which have a combined plant history of greater than 30 yrs, and have not had a failure of this type. A failure probability index of (-2) was selected for IROFS9. This corresponds to an enhanced administrative IROFS per NUREG-1520 criteria. IROFS9 provides procedures and training for operator response to the carbon trap high temperature alarm. Training will be conducted annually. A failure probability index of (-2) was selected for IROFS8. This corresponds to a single active engineered IROFS per NUREG-1520 criteria. IROFS8 will be tested annually.
PB3-3	The initial failure (initiating event) is the blending vent system carbon trap becomes saturated with UF_6 caused by a small UF_6 leak through a blending system cold trap valve. For the uncontrolled accident sequence, a UF_6 plug forms on the discharge of the vacuum pump, causing high pressure in the vacuum pump and thus failing seals leading to a release of UF_6 to the Blending and Liquid Sampling Area. This event has been calculated to result in an intermediate consequence to the worker.

Accident Identifier (See Table 3.7-1)	Description
PB3-3 (continued)	For the controlled accident sequence, the preventive measure is a fail-safe, hard-wired, high carbon trap weight trip of the vacuum pump (IROFS3). The frequency index number for the initiating event was determined to be (-2). The NUREG-1520 criteria – no failures of this type in this facility in 30 yrs – applies. This failure frequency index was selected based on evidence from history of similarly designed Urenco European plants, which have a combined plant history of greater than 30 yrs, and have not had a failure of this type. A failure probability index of (-2) was selected for IROFS3. This corresponds to a single active engineered IROFS per NUREG-1520 criteria. IROFS3 will be tested annually.
PB3-4	The description for this accident sequence is identical to sequence PT1-1 with the exception that this sequence applies to the movement of vacuum pumps instead of product pumps.
PB4-1	The initial failure (initiating event) is the product liquid sampling autoclave heater failure (heat off) followed by reheat. Solidification of UF_6 in the sampling manifold isolates pressure trips. Upon reheat, the sampling manifold ruptures. For the uncontrolled accident sequence, (autoclave pressure boundary not credited) UF_6 from the sampling manifold and the liquid UF_6 in the product cylinder is released to the Blending and Liquid Sampling Area. This event is assumed to result in a high consequence to the worker and public. For the controlled accident sequence, the preventive measures are (1) the autoclave vessel integrity (IROFS10), (2) an HF monitor in the autoclave, and (3) an autoclave air pressure alarm which alarms in the control room and notifies the operators of the abnormal condition. The frequency index number for the initiating event was determined to be (-2). The NUREG-1520 criteria – no failures of this type in this facility in 30 yrs – applies. This failure frequency index was selected based on

Accident Identifier (See Table 3.7-1)	Description
PB4-1 (continued)	evidence from history of similarly designed Urenco European plants, which have a combined plant history of greater than 30 yrs, and have not had a failure of this type. A failure probability index of (-3) was selected for IROFS10. This corresponds to a single passive engineered IROFS per NUREG-1520. The product liquid sampling autoclave will be inspected annually.
PB4-2	The initial failure (initiating event) is the liquid sampling autoclave heater controller failure causing the heater to remain on. For the uncontrolled accident sequence (autoclave pressure boundary credited), the product cylinder over heats and the cylinder hydraulically ruptures due to the expansion of the UF_6. Upon cylinder rupture, the product cylinder content of UF_6 is released within the liquid sampling autoclave pressure boundary. The heater continues to input heat into the liquid sampling autoclave causing the autoclave pressure boundary to rupture. HF is released to the Blending and Liquid Sampling Area. This event is assumed to result in a high consequence to the worker and public. For the controlled accident sequence, the preventive measures are (1) a fail-safe hard-wired independent autoclave high temperature heater and fan trip (IROFS11), (2) a diverse, independent product liquid sampling autoclave high air pressure trip of product liquid sampling autoclave heater and fan (IROFS12), and (3) individual heater element temperature trips. The frequency index number for the initiating event was determined to be (-2). The NUREG-1520 criteria – no failures of this type in this facility in 30 yrs – applies. This failure frequency index was selected based on evidence from history of similarly designed Urenco European plants, which have a combined plant history of greater than 30 yrs, and have not had a failure of this type. A failure probability index of (-2) was selected for IROFS11. This corresponds to a single active engineered IROFS per NUREG-1520. IROFS11 will be tested annually.

Accident Identifier (See Table 3.7-1)	Description
PB4-2 (continued)	A failure probability index of (-2) was selected for IROFS12. This corresponds to a single active engineered IROFS per NUREG-1520. IROFS12 will be tested annually.
PB4-3	The initial failure (initiating event) is the operator error of leaving the sampling manifold purge valve open and blind flange not fitted. Upon liquid sample heat up and tipping of the liquid sampling autoclave, the sampling manifold releases liquid UF_6 into the autoclave. For the uncontrolled accident sequence (autoclave pressure boundary not credited), UF_6 from the sampling manifold and the liquid UF_6 in the product cylinder is released to the Blending and Liquid Sampling Area. This event is assumed to result in a high consequence to the worker and public. For the controlled accident sequence, the preventive measures are (1) the autoclave vessel integrity (IROFS10) and (2) an HF monitor in autoclave and an autoclave air pressure alarm which alarms in the control room and notifies the operators of the abnormal condition. The frequency index number for the initiating event was determined to be (-2). The NUREG-1520 criteria – no failures of this type in this facility in 30 yrs – applies. This failure frequency index was selected based on evidence from operator error history at similarly designed Urenco European plants, which have a combined plant history of greater than 30 yrs, and have not had a failure of this type. A failure probability index of (-3) was selected for IROFS10. This corresponds to a single passive engineered IROFS per NUREG-1520. The product liquid sampling autoclave will be inspected annually.

Accident Identifier (See Table 3.7-1)	Description
PB4-4	The initial failure (initiating event) is an over filled product cylinder heated in the sampling autoclave. For the uncontrolled accident sequence (autoclave pressure boundary not credited), the over filled product cylinder is heated in the sampling autoclave followed by cylinder rupture. Upon cylinder rupture, the product content of UF_6 cylinder is released to the Blending and Liquid Sampling Area. This event is assumed to result in a high consequence to the worker and public. For the controlled accident sequence, the preventive measures are (1) product cylinders are weighed in the Blending and Liquid Sampling Area before placement into the autoclave (IROFS42), (2) the autoclave vessel assembly integrity (IROFS10), and (3) a HF monitor in autoclave and an autoclave air pressure alarm which alarms in control room and notifies the operators of the abnormal condition. The frequency index number for the initiating event was determined to be (-2). The NUREG-1520 criteria – no failures of this type in this facility in 30 yrs – applies. This failure frequency index was selected based on evidence from history of similarly designed Urenco European plants, which have a combined plant history of greater than 30 yrs, and have not had a failure of this type. A failure probability index of (-2) was selected for IROFS42. This corresponds to an administrative IROFS for routine planned operations per NUREG-1520. IROFS42 provides procedures and training for verification of cylinder weight. Training will be conducted annually. The scale for the weighing product cylinders will be tested annually. A failure probability index of (-3) was selected for IROFS10. This corresponds to a single passive engineered IROFS per NUREG-1520. The product liquid sampling autoclave will be inspected annually.

Accident Identifier (See Table 3.7-1)	Description
PB4-5	The initial failure (initiating event) is a release of UF_6 from the product cylinder at the end of the liquid sampling cycle into the autoclave. The flow path from the autoclave to the SB GEVS is then opened with the potential for a criticality event in the SB GEVS. The detailed description of the criticality safety evaluations, associated safety margins and analysis assumptions used in determining the conditions for criticality is found in Chapter 5. For the uncontrolled accident sequence, UF_6 (Product) is discharged to the SB GEVS and is collected as UO_2F_2 on the SB GEVS HEPA filters or electrostatic precipitator forming a critical mass of fissile material on the filter or within the precipitator. A criticality event is assumed to result for this accident sequence. This event is assumed to have a high consequence to the worker and public. For the controlled accident sequence, the preventive measures are (1) autoclave HF detector alarm to notify the operator there is an HF release internal to autoclave and operator response is to maintain isolation of the SB GEVS, (2) if HF is detected, the shot bolt is inhibited from retraction which prevents opening the SB GEVS vent valve (IROFS13), and (3) a ^{235}U selective gamma monitor system that monitors the SB GEVS filters and electrostatic precipitator and trips the operating SB GEVS and automatically starts the standby SB GEVS train if Hi-Hi gamma levels are detected in the SB GEVS filters and bypasses and isolates the electrostatic precipitator if Hi-Hi gamma levels are detected in the electrostatic precipitator (IROFS8). The frequency index number for the initiating event was determined to be (-2). The NUREG-1520 criteria – no failures of this type in this facility in 30 yrs – applies. This failure frequency index was selected based on evidence from history of similarly designed Urenco European plants, which have a combined plant history of greater than 30 yrs, and have not had a failure of this type. A failure probability index of (-2) was selected for IROFS8. This corresponds to a single active engineered IROFS per NUREG-1520. IROFS8 will be tested annually.

Accident Identifier (See Table 3.7-1)	Description
PB4-5 (continued)	A failure probability index of (-2) was selected for IROFS13. This corresponds to a single active engineered IROFS per NUREG-1520. IROFS13 will be tested annually.
VR1-1	The initial failure (initiating event) is the carbon trap becomes saturated with UF_6 caused by a small UF_6 leak through a process valve in the vessel pressure test/valve change rig with the potential for a criticality event in the Technical Services Building (TSB) GEVS. The combination of conditions, that would lead to an accumulation of fissile material on the TSB GEVS filters resulting in a criticality event are: (1) The cold trap outlet valve leaks, and (2) The carbon trap becomes saturated, and (3) The leak into the TSB GEVS system must exist for a significant period of time to allow a sufficient amount of accumulation on the filters to form a critical mass. The detailed description of the criticality safety evaluations, associated safety margins and analysis assumptions used in determining the conditions for criticality is found in Chapter 5. For the uncontrolled accident sequence, UF_6 (Product) is discharged to the TSB GEVS and is collected UO_2F_2 on the TSB GEVS HEPA forming a critical mass of fissile material on the filter over a long period of time. A criticality event is assumed to result for this accident sequence. This event is assumed to have a high consequence to the worker and public. For the controlled accident sequence, the preventive measures are (1) a fail-safe hard-wired high carbon trap weight trip of the vacuum pump (IROFS3) and (2) a ^{235}U selective gamma monitor system that monitors the TSB GEVS filters and trips the TSB GEVS (IROFS21).

Accident Identifier (See Table 3.7-1)	Description
VR1-1 (continued)	The frequency index number for the initiating event was determined to be (-2). The NUREG-1520 criteria – no failures of this type in this facility in 30 yrs – applies. This failure frequency index was selected based on evidence from history of similarly designed Urenco European plants, which have a combined plant history of greater than 30 yrs, and have not had a failure of this type. A failure probability index of (-2) was selected for IROFS3. This corresponds to a single active engineered IROFS per NUREG-1520 criteria. IROFS3 will be tested annually. A failure probability index of (-2) was selected for IROFS21. This corresponds to a single active engineered IROFS per NUREG-1520 criteria. IROFS21 will be tested annually.
VR1-2	The initial failure (initiating event) is an operator error in excessively opening the cold trap outlet throttle valve in the cylinder vent system. A high UF_6 flow to the carbon trap results in high temperature in the carbon trap and release of UF_6 into the TSB GEVS with the potential for a criticality event. The detailed description of the criticality safety evaluations, associated safety margins and analysis assumptions used in determining the conditions for criticality is found in Chapter 5. For the uncontrolled accident sequence, UF_6 (Product) is discharged to the TSB GEVS and is collected on the TSB GEVS HEPA filters forming a critical mass of fissile material on the filter over a long period of time. A criticality event is assumed to result for this accident sequence. This event is assumed to have a high consequence to the worker and public. For the controlled accident sequence, the preventive measures are (1) a fail-safe hard-wired high carbon trap temperature trip of the vacuum pump (IROFS22) and (2) a ^{235}U selective gamma monitor system that monitors the TSB GEVS filters and trips the TSB GEVS (IROFS21).

Accident Identifier (See Table 3.7-1)	Description
VR1-2 (continued)	The frequency index number for the initiating event was determined to be (-2). The NUREG-1520 criteria – no failures of this type in this facility in 30 yrs – applies. This failure frequency index was selected based on evidence from history of similarly designed Urenco European plants, which have a combined plant history of greater than 30 yrs, and have not had a failure of this type. A failure probability index of (-2) was selected for IROFS22. This corresponds to a single active engineered IROFS per NUREG-1520 criteria. IROFS22 will be tested annually. A failure probability index of (-2) was selected for IROFS21. This corresponds to a single active engineered IROFS per NUREG-1520 criteria. IROFS21 will be tested annually.
VR1-3	The initial failure (initiating event) is the failure of a cylinder superior valve or the flexible piping of a cylinder containing UF_6 undergoing a cylinder pressure test after repair/replacement of a leaking cylinder component. For the uncontrolled accident sequence, a slight over pressure release of UF_6 exposes the worker. This event was calculated to result in an intermediate consequence to the worker and low consequence to the public. For the controlled accident sequence, the preventive measure is use of personnel protection equipment to prevent exposure UF_6 (IROFS23). The frequency index number for the initiating event was determined to be (-2). The NUREG-1520 criteria—no failures of this type in this facility in 30 yrs—applies. This failure frequency index was selected based on evidence from history of similarly designed Urenco European plants, which have a combined plant history of greater than 30 yrs, and have not had a failure of this type.

Accident Identifier (See Table 3.7-1)	Description
VR1-3 (continued)	A failure probability index of (-2) was selected for IROFS23. This corresponds to an enhanced administrative IROFS per NUREG-1520 criteria. IROFS23 provides procedures and training for respiratory protection. Training will be conducted annually.
VR1-5	The initial failure (initiating event) is the vent subsystem carbon trap becoming saturated with UF_6 caused by a small UF_6 leak through a ventilated room mobile pump and trap rig cold trap valve. For the uncontrolled accident sequence, a UF_6 plug forms on the discharge of the vacuum pump, causing high pressure in the vacuum pump and thus failing seals leading to a release of UF_6 to the UF_6 Handling Area. This event has been calculated to result in an intermediate consequence to the worker. For the controlled accident sequence, the preventive measure is a fail-safe, hard-wired, high carbon trap weight trip of the vacuum pump (IROFS3). The frequency index number for the initiating event was determined to be (-2). The NUREG-1520 criteria—no failures of this type in this facility in 30 yrs—applies. This failure frequency index was selected based on evidence from history of similarly designed Urenco European plants, which have a combined plant history of greater than 30 yrs, and have not had a failure of this type. A failure probability index of (-2) was selected for IROFS3. This corresponds to a single active engineered IROFS per NUREG-1520 criteria. IROFS3 will be tested annually.

Accident Identifier (See Table 3.7-1)	Description
VR2-1	The initial failure (initiating event) is a loss of containment of a chemical trap and pouring of the contents of the trap into the Ventilated Room. The cause could be operator error in unloading a carbon trap or impact to a carbon trap. For the uncontrolled accident sequence, a release of carbon fines containing uranic material from the trap exposes the worker through inhalation of uranic material. This event was calculated to result in an intermediate consequence to the worker and low consequence to the public. For the controlled accident sequence, the preventive measure is use of personnel protection equipment to prevent exposure to airborne release of the carbon fines during unloading of the carbon traps (IROFS23). The frequency index number for the initiating event was determined to be (-2). The NUREG-1520 criteria – no failures of this type in this facility in 30 yrs – applies. This failure frequency index was selected based on evidence from history of similarly designed Urenco European plants, which have a combined plant history of greater than 30 yrs, and have not had a failure of this type. A failure probability index of (-2) was selected for IROFS23. This corresponds to an enhanced administrative IROFS per NUREG-1520 criteria. IROFS23 provides procedures and training for respiratory protection. Training will be conducted annually.
VR2-2	The initial failure (initiating event) is a loss of containment of a chemical dump trap and pouring of the contents of the trap into the ventilated room. The cause could be operator error in unloading a chemical dump trap or impact to a chemical dump trap. For the uncontrolled accident sequence, a release of sodium fluoride (NaF) fines containing uranic material from the trap exposes the worker through inhalation of uranic material. This event was calculated to result in a high consequence to the worker and low consequence to the public. For the controlled accident sequence, the preventive measures are (1) workers will use personnel protection

Accident Identifier (See Table 3.7-1)	Description
VR2-2 (continued)	equipment to prevent exposure to airborne sodium fluoride fines during unloading of the chemical dump traps (IROFS23) and (2) workers will use an unloading device connected to an operating TSB GEVS to prevent exposure to airborne sodium fluoride fines during unloading of the chemical dump traps (IROFS24). The frequency index number for the initiating event was determined to be (-2). The NUREG-1520 criteria – no failures of this type in this facility in 30 yrs – applies. This failure frequency index was selected based on evidence from history of similarly designed Urenco European plants, which have a combined plant history of greater than 30 yrs, and have not had a failure of this type. A failure probability index of (-2) was selected for IROFS23. This corresponds to an enhanced administrative IROFS per NUREG-1520 criteria. IROFS23 provides procedures and training for respiratory protection. Training will be conducted annually. A failure probability index of (-2) was selected for IROFS24. This corresponds to an enhanced administrative IROFS per NUREG-1520 criteria. IROFS24 provides procedures and training for use and operation of the TSB GEVS. Training will be conducted annually.
VR2-3	The accident sequence is the failure of numerous components/systems/procedures leading to a criticality in a product chemical trap being stored. This description of this sequence is the following: (1) The trap would have to become filled with a greater quantity of UF_6 than normal, i.e. then that controlled by the trap weight trip, and (2) The UF_6 would have to become moderated, e.q. by moisture in inleaking air. Criticality calculations have assumed that the trap body is completely filled with optimum moderated uranyl fluoride with no chemical absorbers in the trap, and (3) The trap would have to interact with more than one component containing enriched uranium, as interaction of the trap with one other component is subcritical (i.e., failure of IROFS18).

Accident Identifier (See Table 3.7-1)	Description
VR2-3 (continued)	The storage array of product chemical traps are subcritical up to well over 120 traps, which is more than the number of traps expected for the total National Enrichment Facility (NEF) inventory of chemical traps. For the uncontrolled accident sequence, a product chemical trap containing moderated enriched uranium or a storage array of product chemical traps would have to undergo failures (1) through (3) above to result in a potential criticality event. For this accident sequence, a criticality event was assumed. A criticality event is assumed to result in a high consequence to the worker and public. For the controlled accident sequence, the preventive measure is an administrative control on the storage and an independent verification of storage or interaction (IROFS40). The frequency index number for the initiating event, based on the combination of (1) through (3) above, was conservatively assumed to be (-3). The NUREG-1520 criteria – no failures in 30 yrs for tens of similar IROFS in the industry - applies. The failure frequency index was conservatively selected based on evidence from history of similarly designed Urenco European plants, with a combined plant history of greater than 30 yrs, with hundreds of similar evolutions per year, and have not had any criticality events. A failure probability index of (-3) was selected for IROFS40. This corresponds to a single enhanced administrative IROFS per NUREG-1520. Training will be conducted annually. The detailed description of the interaction evaluations supporting the criticality safety requirements, associated safety margins and analysis assumptions is found in Chapter 5.
VR2-4	The accident sequence is the failure of numerous components/systems/procedures leading to a criticality in a product chemical trap being transported. This description of this sequence is the following: (1) The trap would have to become filled with a greater quantity of UF_6 than normal, i.e. then that controlled by the trap weight trip, and

Accident Identifier (See Table 3.7-1)	Description
VR2-4 (continued)	(2) The UF_6 would have to become moderated, e.q. by moisture in in-leaking air. Criticality calculations have assumed that the trap body is completely filled with optimum moderated uranyl fluoride with no chemical absorbers in the trap, and (3) The trap would have interact during movement with more than one component containing enriched uranium, as interaction of the trap with one other component is subcritical. (i.e., failure of IROFS18) The movement of chemical traps is part of normal operations; the abnormal operating condition pertaining to the chemical trap concerns the assumption that the chemical trap and interacting component are filled with product UF_6 breakdown material at optimum moderation conditions. This would be extremely unlikely for a single chemical trap and even more unlikely for more than one component. For the uncontrolled accident sequence, a product chemical trap containing moderated enriched uranium would have to undergo failures (1) through (3) above to result in a potential criticality event. For this accident sequence, a criticality event was assumed. A criticality event is assumed to result in a high consequence to the worker and public. For the controlled accident sequence, the preventive measure is an administrative control on the storage and independent verification of storage or interaction (IROFS40). The frequency index number for the initiating event, based on the combination of (1) through (3) above, was conservatively assumed to be (-3). The NUREG-1520 criteria – no failures in 30 yrs for tens of similar IROFS in the industry - applies. The failure frequency index was conservatively selected based on evidence from history of similarly designed Urenco European plants, with a combined plant history of greater than 30 yrs, with hundreds of similar evolutions per year, and have not had any criticality events. A failure probability index of (-3) was selected for IROFS40. This corresponds to a single enhanced administrative IROFS per NUREG-1520. Training will be conducted annually. The detailed description of the interaction evaluations supporting the criticality safety requirements, associated safety margins and analysis assumptions is found in Chapter 5.

Accident Identifier (See Table 3.7-1)	Description
VR2-5	The accident sequence is the failure of numerous components/systems/procedures leading to a criticality in a chemical dump trap being stored. This description of this sequence is the following: (1) Multiple dumps to the traps would be needed to accumulate sufficient uranic mass in the traps despite the fact that the system is not expected to be used in the lifetime of the plant, and (2) The fissile material in the trap and interacting components would be a uranyl fluoride/water mixture at an H/U atomic ratio near optimum moderation, and (3) The trap, as well as other interacting components, would be nearly or completely filled with the above material at a high enough enrichment to achieve a configuration favorable for criticality (the enrichment of the chemical dump traps would be approximately 1.5 $^{w}/_{o}$ ^{235}U), and (4) The trap would have to interact with greater than one component containing fissile material, as interaction of the trap and one other component is subcritical. (i.e., failure of IROFS18) For the uncontrolled accident sequence, a product chemical trap containing moderated enriched uranium would have to undergo failures (1) through (4) above to result in a potential criticality event. For this accident sequence, a criticality event was assumed. A criticality event is assumed to result in a high consequence to the worker and public. For the controlled accident sequence, the preventive measure is an administrative control on the storage and independent verification of storage or interaction (IROFS40). The frequency index number for the initiating event, based on the combination of (1) through (4) above, was conservatively assumed to be (-2). The NUREG-1520 criteria – no failures of this type in this facility in 30 yrs - applies. The failure frequency index was conservatively selected based on evidence from history of similarly designed Urenco European plants, with a combined plant history of greater than 30 yrs and have not had any criticality events.

Accident Identifier (See Table 3.7-1)	Description
VR2-5 (continued)	A failure probability index of (-3) was selected for IROFS40. This corresponds to a single enhanced administrative IROFS per NUREG-1520. Training will be conducted annually. The detailed description of the interaction evaluations supporting the criticality safety requirements, associated safety margins and analysis assumptions is found in Chapter 5.
VR2-6	The accident sequence is the failure of numerous components/systems/procedures leading to a criticality in a chemical dump trap being transported. This description of this sequence is the following: (1) Multiple dumps to the traps would be needed to accumulate sufficient uranic mass in the traps despite the fact that the system is not expected to be used in the lifetime of the plant, and (2) The fissile material in the trap and interacting components would be a uranyl fluoride/water mixture at an H/U atomic ratio near optimum moderation, and (3) The trap, as well as other interacting components, would be nearly or completely filled with the above material at a high enough enrichment to achieve a configuration favorable for criticality (the enrichment of the chemical dump traps would be approximately 1.5 $^{w}/_{o}$ ^{235}U), and (4) The trap would have to interact with greater than one component containing fissile material, as interaction of the trap and one other component is subcritical. (i.e., failure of IROFS15) For the uncontrolled accident sequence, a product chemical trap containing moderated enriched uranium would have to undergo failures (1) through (4) above to result in a potential criticality event. For this accident sequence, a criticality event was assumed. A criticality event is assumed to result in a high consequence to the worker and public. For the controlled accident sequence, the preventive measure is an administrative control on the storage and independent verification of storage or interaction (IROFS40).

Accident Identifier (See Table 3.7-1)	Description
VR2-6 (continued)	The frequency index number for the initiating event, based on the combination of (1) through (4) above, was conservatively assumed to be (-2). The NUREG-1520 criteria – no failures of this type in this facility in 30 yrs - applies. The failure frequency index was conservatively selected based on evidence from history of similarly designed Urenco European plants, with a combined plant history of greater than 30 yrs and have not had any criticality events. A failure probability index of (-3) was selected for IROFS40. This corresponds to a single enhanced administrative IROFS per NUREG-1520. Training will be conducted annually. The detailed description of the interaction evaluations supporting the criticality safety requirements, associated safety margins and analysis assumptions is found in Chapter 5.
FR1-1	The accident sequence is the failure of numerous components/systems/procedures leading to a criticality in a waste container being transported. This description of this sequence is the following: (1) The fissile material in the waste container and interacting components would be a uranyl fluoride/water mixture at an H/U atomic ratio near optimum moderation, and (2) The waste container, as well as other interacting components, would be nearly or completely filled with the above material at a high enough enrichment to achieve a configuration favorable for criticality (Urenco European experience is that less than 10% of waste container enrichment is at product enrichment levels), and (3) The operator would use a failed waste container passive transport device (IROFS14), and (4) The waste container would have to interact with greater than one component containing fissile material, as interaction of the waste container and one other component is subcritical (i.e., failure of IROFS15). The movement of waste containers is part of normal operations; the abnormal operating condition pertaining to the waste container concerns the assumption that the waste container and interacting component are filled with product UF_6 breakdown material at optimum moderation conditions. This would be extremely unlikely for

Accident Identifier (See Table 3.7-1)	Description
FR1-1 (continued)	a single waste container and even more unlikely for more than one component. For the uncontrolled accident sequence, a waste container containing moderated enriched uranium would have to undergo failures (1) through (4) above to result in a potential criticality event. For this accident sequence, a criticality event was assumed. A criticality event is assumed to result in a high consequence to the worker and public. For the controlled accident sequence, the preventive measure is an administrative control on the storage and independent verification of storage or interaction (IROFS40). The frequency index number for the initiating event, based on the combination of (1) through (4) above, was conservatively assumed to be (-2). The NUREG-1520 criteria – no failures of this type in this facility in 30 yrs - applies. The failure frequency index was conservatively selected based on evidence from history of similarly designed Urenco European plants, with a combined plant history of greater than 30 yrs, with hundreds of similar evolutions per year, and have not had any criticality events. A failure probability index of (-3) was selected for IROFS40. This corresponds to a single enhanced administrative IROFS per NUREG-1520. Training will be conducted annually. The detailed description of the interaction evaluations supporting the criticality safety requirements, associated safety margins and analysis assumptions is found in Chapter 5.
FR1-2	The accident sequence is the failure of numerous components/systems/procedures leading to a criticality in a waste container being stored. This description of this sequence is the following: (1) The fissile material in the waste container and interacting components would be a uranyl fluoride/water mixture at an H/U atomic ratio near optimum moderation, and (2) The waste container, as well as other interacting components, would be nearly or completely filled with the above material at a high enough enrichment to achieve a configuration favorable for criticality (Urenco European experience is that less than 10% of waste container enrichment is at product enrichment levels), and

Accident Identifier (See Table 3.7-1)	Description
FR1-2 (continued)	(3) The operator would use a failed waste container passive storage array (IROFS17), and (4) The waste container would have to interact with greater than one component containing fissile material, as interaction of the waste container and one other component is subcritical. (i.e., failure of IROFS18) For the uncontrolled accident sequence, a waste container containing moderated enriched uranium would have to undergo failures (1) through (4) above to result in a potential criticality event. For this accident sequence, a criticality event was assumed. A criticality event is assumed to result in a high consequence to the worker and public. For the controlled accident sequence, the preventive measure is an administrative control on the storage and independent verification of storage or interaction (IROFS40). The frequency index number for the initiating event, based on the combination of (1) through (4) above, was conservatively assumed to be (-2). The NUREG-1520 criteria – no failures of this type in this facility in 30 yrs - applies. The failure frequency index was conservatively selected based on evidence from history of similarly designed Urenco European plants, with a combined plant history of greater than 30 yrs, with hundreds of similar evolutions per year, and have not had any criticality events. A failure probability index of (-3) was selected for IROFS40. This corresponds to a single enhanced administrative IROFS per NUREG-1520. Training will be conducted annually. The detailed description of the interaction evaluations supporting the criticality safety requirements, associated safety margins and analysis assumptions is found in Chapter 5.
FR2-1	This accident sequence is identical to sequence FR1-1.
FR2-2	This accident sequence is identical to sequence FR1-2.
DS1-1	This accident sequence is identical to sequence FR1-1.

Accident Identifier (See Table 3.7-1)	Description
DS1-2	This accident sequence is identical to sequence FR1-2.
DS1-3	The initial failure (initiating event) is the accumulation of sufficient uranium mass to cause criticality in the decontamination tank. The initial set of conditions, or combination of conditions, that needs to be fulfilled to result in a criticality event in the decontamination tanks include the following: (1) A significant number of components containing uranium with product enrichments would need to be processed to provide the uranium levels needed to create favorable conditions for criticality. (2) The operator would have to fail to notice the incremental rise in uranium concentration from the sampling of the tank. The detailed description of mass control requirements and interaction evaluations supporting the criticality safety requirements, associated safety margins and analysis assumptions are found in Chapter 5. For the uncontrolled accident sequence, sufficient uranium mass accumulates in the decontamination tank. A criticality event is assumed to result for this accident sequence. A criticality event is assumed to result in a high consequence to the worker and public. For the controlled accident sequence, the preventive measure is an administrative control program for criticality mass control which includes the following IROFS19 requirements: (a) tank sampling, (b) visual inspection of the tank after emptying, (c) safety margin for double batching, and (d) an operator training program for the storage/interaction of materials containing fissile material. The frequency index number for the initiating event was determined to be (-2). The NUREG-1520 criteria – no failures of this type in this facility in 30 yrs –applies. The failure frequency index was conservatively selected based on evidence from history of similarly designed Urenco European plants, with a combined plant history of greater than 30 yrs, and have not had any criticality events.

Accident Identifier (See Table 3.7-1)	Description
DS1-3 (continued)	A failure probability index of (-3) was selected for IROFS19. This corresponds to an administrative IROFS for routine planned operation per NUREG-1520. IROFS19 provides procedures and training relative to the following criticality mass control attributes: (a) tank sampling, (b) visual inspection of the tank after emptying, (c) safety margin for double batching, (d) batch limits on processing, (e) limits on the number of product pumps processed per batch and (f) an operator training program for the storage/interaction of materials containing fissile material. Training will be conducted annually.
DS2-1	This accident sequence is identical to sequence FR1-1.
DS2-2	This accident sequence is identical to sequence FR1-2.
DS2-3	The initial failure (initiating event) is the accumulation of sufficient uranium mass in the first rinse tank to cause criticality. The initial set of conditions, or combination of conditions, that needs to be fulfilled to result in a criticality event in the first rinse tank include the following: (1) A significant number of components containing uranium with product enrichments would need to be processed to provide the uranium levels needed to create favorable conditions for criticality. (2) The operator would have to fail to notice the incremental rise in uranium concentration from the sampling of the tank. The detailed description of mass control requirements and interaction evaluations supporting the criticality safety requirements, associated safety margins and analysis assumptions are found in Chapter 5. For the uncontrolled accident sequence, sufficient uranium mass accumulates in the first rinse tank. A criticality event is assumed to result in a high consequence to the worker and public.

Accident Identifier (See Table 3.7-1)	Description
DS2-3 (continued)	For the controlled accident sequence, the preventive measure is an administrative control program for criticality mass control which includes the following IROFS19 requirements: (a) tank sampling, (b) visual inspection of the tank after emptying, (c) safety margin for double batching, and (d) an operator training program for the storage/interaction of materials containing fissile material. The frequency index number for the initiating event was determined to be (-2). The NUREG-1520 criteria – no failures of this type in this facility in 30 yrs –applies. The failure frequency index was conservatively selected based on evidence from history of similarly designed Urenco European plants, with a combined plant history of greater than 30 yrs, and have not had any criticality events. A failure probability index of (-3) was selected for IROFS19. This corresponds to an administrative IROFS for routine planned operation per NUREG-1520. IROFS19 provides procedures and training relative to the following criticality mass control attributes: (a) tank sampling, (b) visual inspection of the tank after emptying, (c) safety margin for double batching, (d) batch limits on processing, (e) limits on the number of product pumps processed per batch and (f) an operator training program for the storage/interaction of materials containing fissile material. Training will be conducted annually.
DS2-5	The accident sequence is the failure of numerous components/systems/procedures leading to a criticality in flexible hoses being stored. This description of this sequence is the following: (1) The fissile material in the flexible hoses and interacting components would be a uranyl fluoride/water mixture at an H/U atomic ratio near optimum moderation, and (2) The flexible hoses, as well as other interacting components, would be nearly or completely filled with the above material at a high enough enrichment to achieve a configuration favorable for criticality, and (3) The flexible hoses would have to interact with greater than one component containing fissile material, as interaction of the flexible hoses and one other component is subcritical (i.e., failure of IROFS18).

Accident Identifier (See Table 3.7-1)	Description
DS2-5 (continued)	For the uncontrolled accident sequence, multiple flexible hoses containing moderated enriched uranium would have to undergo failures (1) through (3) above to result in a potentially criticality event. For this accident sequence, a criticality event was assumed. A criticality event is assumed to result in a high consequence to the worker and public. For the controlled accident sequence, the preventive measure is an administrative control on the storage and independent verification of storage or interaction (IROFS40). The frequency index number for the initiating event, based on the combination of (1) through (3) above, was conservatively assumed to be (-2). The NUREG-1520 criteria—no failures of this type in this facility in 30 yrs—applies. The failure frequency index was conservatively selected based on evidence from history of similarly designed Urenco European plants, with a combined plant history of greater than 30 yrs, with hundreds of similar evolutions per year, and have not had any criticality events. A failure probability index of (-3) was selected for IROFS40. This corresponds to a single enhanced administrative IROFS per NUREG-1520. Training will be conducted annually. The detailed description of the interaction evaluations supporting the criticality safety requirements, associated safety margins and analysis assumptions is found in Chapter 5.
DS3-1	This accident sequence is identical to sequence FR1-1.
DS3-2	This accident sequence is identical to sequence FR1-2.
CL3-1	The initial failure (initiating event) is an operator error, no liquid nitrogen in the Dewar cold trap of the Sub-sampling System in the chemical laboratory. During evacuation of the Sub-sampling System, liquid UF_6 desublimes to gas and is pumped by the vacuum pump and is transferred to the TSB GEVS with the potential for a criticality event.

Accident Identifier (See Table 3.7-1)	Description
CL3-1 (continued)	The conditions that would lead to an accumulation of fissile material on the TSB GEVS filters resulting in a criticality event is the leak of UF_6 into the TSB GEVS system must exist for a significant period of time to allow a sufficient amount of accumulation on the filters to form a critical mass. The detailed description of the criticality safety evaluations, associated safety margins and analysis assumptions used in determining the conditions for criticality is found in Chapter 5. For the uncontrolled accident sequence, UF_6 (Product) is discharged to the TSB GEVS and is collected on the TSB GEVS HEPA filters forming a critical mass of fissile material on the filter over a long period of time. A criticality event is assumed to result for this accident sequence. This event is assumed to have a high consequence to the worker and public. For the controlled accident sequence, the preventive measures are (1) a UF_6 cold trap high temperature interlock of cold trap No. 2 valve (IROFS20) and (2) a ^{235}U selective gamma monitor system that monitors the TSB GEVS filters and trips the TSB GEVS (IROFS21). The frequency index number for the initiating event was determined to be (-2). The NUREG-1520 criteria – no failures of this type in this facility in 30 yrs – applies. This failure frequency index was selected based on evidence from history of similarly designed Urenco European plants, which have a combined plant history of greater than 30 yrs, and have not had a failure of this type. A failure probability index of (-2) was selected for IROFS20. This corresponds to a single active engineered IROFS per NUREG-1520 criteria. IROFS22 will be tested annually. A failure probability index of (-2) was selected for IROFS21. This corresponds to a single active engineered IROFS per NUREG-1520 criteria. IROFS21 will be tested annually.

Accident Identifier (See Table 3.7-1)	Description
CL3-2	The initial failure (initiating event) is an operator error, no liquid nitrogen in the UF_6 cold trap. During the process of transferring product samples for assay analysis, liquid UF_6 flashes to gas. This leads to a release of UF_6 to the atmosphere exposing the worker. For the uncontrolled accident sequence, the release of liquid UF_6 (Product) results in exposure of the worker. This event was calculated to result in an intermediate consequence to the worker and low consequence to the public. For the controlled accident sequence, the preventive measure is the operation of the TSB GEVS attached to chemical laboratory hood containing UF_6 Sub-sampling unit (IROFS24). The frequency index number for the initiating event was determined to be (-2). The NUREG-1520 criteria – no failures of this type in this facility in 30 yrs – applies. This failure frequency index was selected based on evidence from history of similarly designed Urenco European plants, which have a combined plant history of greater than 30 yrs, and have not had a failure of this type. A failure probability index of (-2) was selected for IROFS24. This corresponds to an enhanced administrative IROFS per NUREG-1520 criteria. IROFS24 provides procedures and training for use and operation of the TSB GEVS. Training will be conducted annually.
CL3-3	The initial failure (initiating event) is the UF_6 Sub-sampling unit heater controller failure, causing the heater within the UF_6 Sub-sampling unit to remain on. For the uncontrolled accident sequence, the sample cylinder over heats and the cylinder hydraulically ruptures due to the expansion of the UF_6. Upon cylinder rupture, the sample cylinder content of UF_6 is released within chemical laboratory hood. HF is released to the chemical laboratory exposing workers. This event is calculated to result in a low consequence to the public and a high consequence to the worker.

Accident Identifier (See Table 3.7-1)	Description
CL3-3 (continued)	For the controlled accident sequence, the preventive measures are (1) a fail-safe hard-wired high temperature UF_6 Sub-sampling unit heater trip (IROFS43) and (2) operation of the TSB GEVS attached to chemical laboratory hood (IROFS24). The frequency index number for the initiating event was determined to be (-2). The NUREG-1520 criteria – no failures of this type in this facility in 30 yrs – applies. This failure frequency index was selected based on evidence from history of similarly designed Urenco European plants, which have a combined plant history of greater than 30 yrs, and have not had a failure of this type. The failure probability index number for the hard-wired high temperature trip of the UF_6 Sub-sampling unit heater (IROFS43) was determined to be (-2), a single active engineered IROFS per NUREG-1520. IROFS43 will be tested annually. A failure probability index of (-2) was selected for IROFS24. This corresponds to an enhanced administrative IROFS per NUREG-1520 criteria. IROFS24 provides procedures and training for use and operation of the TSB GEVS. Training will be conducted annually.
CP1-1	The initial failure (initiating event) is that a full product cylinder is used erroneously in the cylinder preparation process and UF_6 is released to the TSB GEVS during the pump out of the cylinder with the potential for a criticality event in the TSB GEVS. The condition that would lead to an accumulation of fissile material on the TSB GEVS filters resulting in a criticality event is that the release of UF_6 into the TSB GEVS system must exist for a significant period of time to allow a sufficient amount of accumulation on the filters to form a critical mass. The detailed description of the criticality safety evaluations, associated safety margins and analysis assumptions used in determining the conditions for criticality is found in Chapter 5.

Accident Identifier (See Table 3.7-1)	Description
CP1-1 (continued)	For the uncontrolled accident sequence, UF_6 (product) is discharged to the TSB GEVS and is collected as UO_2F_2 on the TSB GEVS HEPA filter forming a critical mass of fissile material on the filter. A criticality event is assumed to result for this accident sequence. This event is assumed to have a high consequence to the worker and public. For the controlled accident sequence, the preventive measures are (1) a fail-safe hard-wired high carbon trap weight trip of the vacuum pump (IROFS3) and (2) a ^{235}U selective gamma monitor system that monitors the TSB GEVS filters and trips the TSB GEVS (IROFS21). The frequency index number for the initiating event was determined to be (-2). The NUREG-1520 criteria – no failures of this type in this facility in 30 yrs – applies. This failure frequency index was selected based on evidence from history of similarly designed Urenco European plants, which have a combined plant history of greater than 30 yrs, and have not had a failure of this type. A failure probability index of (-2) was selected for IROFS3. This corresponds to a single active engineered IROFS per NUREG-1520 criteria. IROFS3 will be tested annually. A failure probability index of (-2) was selected for IROFS21. This corresponds to a single active engineered IROFS per NUREG-1520 criteria. IROFS21 will be tested annually.
CP1-2	The initial failure (initiating event) is that a product cylinder arrives at the plant with excess moderator inside the cylinder. This failure results in the potential for a criticality event. The combination of conditions, that needs to be fulfilled to result in a potential criticality event due to moderator being present in a cylinder include the following: (1) The operator must fail to weigh the cylinder or not notice that the weight of the cylinder exceeds its weight tolerance by more than 10 kg (22.1 lbs) the difference between the weight and the tare weight given by the vendor.

Accident Identifier (See Table 3.7-1)	Description
CP1-2 (continued)	(2) During vacuum testing of the cylinder, after connection to the plant, the operator must fail to recognize the increased pressure in the cylinder due to the presence of moderator in the cylinder is within acceptable limits. (3) The cylinder must fail the cylinder suppliers' maintenance requirements to meet the applicable version of ANSI N14.1, "Uranium Hexafluoride – Packaging for Transport." (4) Visual inspection has failed to detect the presence of oil in the cylinder. The detailed description of the moderator control measures supporting the criticality safety requirements associated safety margins and analysis assumptions are found in Chapter 5. For the uncontrolled accident sequence, moderator was present in the cylinder prior to the cylinder being connected to the plant. A criticality event is assumed to result for this accident sequence when the cylinder is connected to the plant. This event is assumed to result in a high consequence to the worker and public. For the controlled accident sequence, the applicable preventive measure is an administrative control for the cylinder moderator control program (IROFS16) that includes the following attributes: weighing of cylinders, visual inspection of cylinders, vacuum testing of cylinders, heel declarations of cylinders, venting control and tracking of individual cylinders and an operator training program for the handling of cylinders. The frequency index number for the initiating event was determined to be (-2). The NUREG-1520 criteria – No failures of this type in this facility in 30 yrs –applies. The failure frequency index was conservatively selected based on evidence from history of similarly designed Urenco Uropean plants, with a combined plant history of greater than 30 yrs and have not had any criticality events. The failure probability index number for the administrative control for the cylinder moderator control program (IROFS16) was determined to be (-3), an administrative IROFS for routine planned operations consistent with NUREG-1520. IROFS16 provides procedures and training for the cylinder moderator control program. Training will be conducted annually.

Accident Identifier (See Table 3.7-1)	Description
CP1-4	The initial failure (initiating event) is the cylinder preparation vent system carbon trap becomes saturated with UF_6 caused by a small UF_6 leak through the cold trap valve. For the uncontrolled accident sequence, a UF_6 plug forms on the discharge of the vacuum pump, causing high pressure in the vacuum pump and thus failing seals leading to a release of UF_6 to the cylinder preparation room. This event has been calculated to result in an intermediate consequence to the worker. For the controlled accident sequence, the preventive measure is a fail-safe, hard-wired, high carbon trap weight trip of the vacuum pump (IROFS3). The frequency index number for the initiating event was determined to be (-2). The NUREG-1520 criteria – no failures of this type in this facility in 30 yrs – applies. This failure frequency index was selected based on evidence from history of similarly designed Urenco European plants, which have a combined plant history of greater than 30 yrs, and have not had a failure of this type. A failure probability index of (-2) was selected for IROFS3. This corresponds to a single active engineered IROFS per NUREG-1520 criteria. IROFS3 will be tested annually.
SW1-1	This accident sequence is identical to sequence FR1-1.
SW1-2	This accident sequence is identical to sequence FR1-2.
LW1-1	The initial failure (initiating event) is the accumulation of sufficient uranium mass in the degreaser water collection tank. The initial condition that needs to be fulfilled to result in a criticality event in the degreaser water collection tank is that the operator would have to fail to control the uranium mass in the tank. The detailed description of mass control requirements supporting the criticality safety requirements, associated safety margins and analysis assumptions are found in Chapter 5.

Accident Identifier (See Table 3.7-1)	Description
LW1-1 (continued)	For the uncontrolled accident sequence, sufficient uranium mass accumulates in the degreaser tank to cause criticality. A criticality event is assumed to result for this accident sequence. A criticality event is assumed to result in a high consequence to the worker and public. For the controlled accident sequence, the applicable preventive measures are an administrative control program for criticality mass control which includes the following IROFS19 requirements: (a) tank sampling, (b) visual inspection of the tank after emptying, (c) safety margin for double batching, and (d) an operator training program for the storage/interaction of materials containing fissile material. The frequency index number for the initiating event was determined to be (-2). The NUREG-1520 criteria – No failures of this type in this facility in 30 yrs –applies. The failure frequency index was conservatively selected based on evidence from history of similarly designed Urenco European plants, with a combined plant history of greater than 30 yrs and have not had any criticality events. A failure probability index of (-3) was selected for IROFS19. This corresponds to an administrative IROFS for routine planned operation per NUREG-1520. IROFS19 provides procedures and training relative to the following criticality mass control attributes: (a) tank sampling, (b) visual inspection of the tank after emptying, (c) safety margin for double batching, (d) an operator training program for the interaction of materials containing fissile material. Training will be conducted annually.
LW1-2	This accident sequence is identical to sequence FR1-1.
LW1-3	This accident sequence is identical to sequence FR1-2.

Accident Identifier (See Table 3.7-1)	Description
LW2-1	The initial failure (initiating event) is the accumulation of sufficient uranium mass in the citric acid tank to cause criticality. The initial condition that needs to be fulfilled to result in a criticality event in the citric acid tank is that the operator would have to fail to control the uranium mass in the tank. The detailed description of mass control requirements supporting the criticality safety requirements, associated safety margins and analysis assumptions are found in Chapter 5. For the uncontrolled accident sequence, sufficient uranium mass accumulates in the citric acid tank. A criticality event is assumed to result in a high consequence to the worker and public. For the controlled accident sequence, the applicable preventive measures are an administrative control program for criticality mass control which includes the following IROFS19 requirements: (a) tank sampling, (b) visual inspection of the tank after emptying, (c) safety margin for double batching, and (d) an operator training program for the storage/interaction of materials containing fissile material. The frequency index number for the initiating event was determined to be (-2). The NUREG-1520 criteria – no failures of this type in this facility in 30 yrs –applies. The failure frequency index was conservatively selected based on evidence from history of similarly designed Urenco European plants, with a combined plant history of greater than 30 yrs and have not had any criticality events. A failure probability index of (-3) was selected for IROFS19. This corresponds to an administrative IROFS for routine planned operation per NUREG-1520. IROFS19 provides procedures and training relative to the following criticality mass control attributes: (a) tank sampling, (b) visual inspection of the tank after emptying, (c) safety margin for double batching, (d) batch limits on processing, (e) limits on the number of product pumps processed per batch and (f) an operator training program for the interaction of materials containing fissile material. Training will be conducted annually.

Accident Identifier (See Table 3.7-1)	Description
LW3-1	The initial failure (initiating event) is the accumulation of sufficient uranium mass in the miscellaneous effluent collection tank to cause criticality. The initial condition that needs to be fulfilled to result in a criticality event in the miscellaneous effluent collection tank is that the operator would have to fail to control the uranium mass in the tank. The detailed description of mass control requirements supporting the criticality safety requirements, associated safety margins and analysis assumptions are found in Chapter 5. For the uncontrolled accident sequence, sufficient uranium mass accumulates in the miscellaneous effluent collection tank. A criticality event is assumed to result for this accident sequence. A criticality event is assumed to result in a high consequence to the worker and public. For the controlled accident sequence, the applicable preventive measures are an administrative control program for criticality mass control which includes the following IROFS19 requirements: (a) tank sampling, (b) visual inspection of the tank after emptying, (c) safety margin for double batching, and (d) an operator training program for the storage/interaction of materials containing fissile material. The frequency index number for the initiating event was determined to be (-2). The NUREG-1520 criteria – No failures of this type in this facility in 30 years –applies. The failure frequency index was conservatively selected based on evidence from history of similarly designed Urenco European plants, with a combined plant history of greater than 30 yrs and have not had any criticality events. A failure probability index of (-3) was selected for IROFS19. This corresponds to an administrative IROFS for routine planned operation per NUREG-1520. IROFS19 provides procedures and training relative to the following criticality mass control attributes: (a) tank sampling, (b) visual inspection of the tank after emptying, (c) safety margin for double batching, (d) batch limits on processing, (e) limits on the number of product pumps processed per batch and (f) an operator training program for the interaction of materials containing fissile material. Training will be conducted annually.

Accident Identifier (See Table 3.7-1)	Description
LW5-1	The initial failure (initiating event) is the accumulation of sufficient uranium mass in the precipitation treatment tank to cause criticality. The initial condition that needs to be fulfilled to result in a criticality event in the precipitation treatment tank is that the operator would have to fail to control the uranium mass in the tank. The detailed description of mass control requirements supporting the criticality safety requirements, associated safety margins and analysis assumptions are found in Chapter 5. For the uncontrolled accident sequence, sufficient uranium mass accumulates in the precipitation treatment tank. A criticality event is assumed to result for this accident sequence. A criticality event is assumed to result in a high consequence to the worker and public. For the controlled accident sequence, the applicable preventive measures are an administrative control program for criticality mass control which includes the following IROFS19 requirements: (a) tank sampling, (b) visual inspection of the tank after emptying, (c) safety margin for double batching, and (d) an operator training program for the storage/interaction of materials containing fissile material. The frequency index number for the initiating event was determined to be (-2). The NUREG-1520 criteria – No failures of this type in this facility in 30 yrs –applies. The failure frequency index was conservatively selected based on evidence from history of similarly designed Urenco European plants, with a combined plant history of greater than 30 yrs and have not had any criticality events. A failure probability index of (-3) was selected for IROFS19. This corresponds to an administrative IROFS for routine planned operation per NUREG-1520. IROFS19 provides procedures and training relative to the following criticality mass control attributes: (a) tank sampling, (b) visual inspection of the tank after emptying, (c) safety margin for double batching, (d) batch limits on processing, (e) limits on the number of product pumps processed per batch and (f) an operator training program for the interaction of materials containing fissile material. Training will be conducted annually.

Accident Identifier (See Table 3.7-1)	Description
DC1-1	The initial failure (initiating event) is the carbon traps become saturated with UF_6 caused by the operation of Cascade Dump System dumping to sodium fluoride (NaF) traps, which have not been filled correctly, coincident with a worker located near the cascade dump vacuum pump. For the uncontrolled accident sequence, a UF_6 plug forms on the discharge line of the cascade dump vacuum pump discharge flange seal, causing high pressure and thus failing the cascade dump vacuum pump discharge flange seal, causing a release of UF_6 to the process services corridor. This event was calculated to result in a high consequence to the local worker. Impact to workers in the vicinity and impact to the public is evaluated in accident sequence DC1-2. For the controlled accident sequence, the preventive measures are an administrative control on the filling and monitoring of the use of NaF traps (IROFSC1), and a fail-safe high weight trip on the carbon filter upstream of the final dump vacuum pump (IROFS3). The frequency index number for the initiating event was determined to be (-2). This frequency index is based on an annual frequency of one for the Cascade Dump System discharge to the NaF traps combined with a conditional probability that the worker is in the vicinity of a cascade dump vacuum pump, estimated at 1E-02 (100 hrs per year). The annual frequency probability for the Cascade Dump System discharge to the sodium fluoride NaF traps was assumed to be approximately annually. This assumption is base on an assessment of the NEF annual Cascade Dump System actuation potential. The dump pumps are in a low occupancy area of the process services corridor. A worker would be adjacent of each pump outlet much less than 100 hours per year (less than one percent of the year). The failure probability index of (-3) was selected for IROFSC1. This corresponds to an enhanced administrative IROFS per NUREG-1520. IROFSC1 provides procedures and training relative to the proper filling of NaF traps including requirements for independent verification. Training will be conducted annually. A failure probability index of (-2) was selected for IROFS3. This corresponds to a single active engineered IROFS per NUREG-1520. IROFS3 will be tested annually.

Accident Identifier (See Table 3.7-1)	Description
DC1-2	The initial failure (initiating event) is the carbon traps become saturated with UF_6 caused by the operation of Cascade Dump System dumping to sodium fluoride (NaF) traps which have not been filled correctly. For the uncontrolled accident sequence, a UF_6 plug forms on the discharge line of the cascade dump vacuum pump discharge flange seal, causing high pressure and thus failing the cascade dump vacuum pump discharge flange seal, causing a release of UF_6 to the process services corridor. This event was calculated to result in an intermediate consequence to the worker in the vicinity. For the controlled accident sequence, the preventive measures are an administrative control on the filling, and monitoring of the use of NaF traps (IROFSC1) and a fail-safe high weight trip on the carbon filter upstream of the final dump vacuum pump (IROFS3). The frequency index number for the initiating event was determined to be (0). This frequency index is based on an annual frequency of one for the Cascade Dump System discharge to the NaF traps. The annual frequency for the Cascade Dump System discharge to the sodium fluoride NaF traps was assumed to be approximately one. This assumption is based on an assessment of the NEF annual Cascade Dump System actuation potential. The failure probability index of (-3) was selected for IROFSC1. This corresponds to an enhanced administrative IROFS per NUREG-1520. IROFSC1 provides procedures and training relative to the proper filling of NaF traps including requirements for independent verification. Training will be conducted annually. A failure probability index of (-2) was selected for IROFS3. This corresponds to a single active engineered IROFS per NUREG-1520. IROFS3 will be tested annually.

Accident Identifier (See Table 3.7-1)	Description
DC1-3	The initial failure (initiating event) is the carbon traps become saturated with UF_6 caused by the operation of Cascade Dump System dumping to sodium fluoride (NaF) traps which have been saturated through excessive use coincident with a worker located near the cascade dump vacuum pump. For the uncontrolled accident sequence, a UF_6 plug forms on the discharge line of the cascade dump vacuum pump discharge flange seal, causing high pressure and thus failing the cascade dump vacuum pump discharge flange seal, causing a release of UF_6 to the process services corridor. This event was calculated to result in a high consequence to the local worker. Impact to the workers in the vicinity and impact to the public is evaluated in accident sequence DC1-4. For the controlled accident sequence, the preventive measures are administrative control on the filling and monitoring of the use of NaF traps (IROFSC1) and a fail-safe high weight trip on the carbon filter upstream of the final dump vacuum pump (IROFS3). The frequency index number for the initiating event was determined to be (-2). This frequency index is based on an annual frequency of one for the Cascade Dump System discharge to the NaF traps combined with a conditional probability that the worker is in the vicinity of a cascade dump vacuum pump, estimated at 1E-02 (100 hrs per year). The annual frequency for the Cascade Dump System discharge to the sodium fluoride NaF traps was assumed to be approximately one. This assumption is based on an assessment of the NEF annual Cascade Dump System actuation potential. The dump pumps are in a low occupancy area of the process services corridor. A worker would be adjacent to each pump outlet much less than 100 hours per year (less than one percent of the year). The failure probability index of (-3) was selected for IROFSC1. This corresponds to an enhanced administrative IROFS per NUREG-1520. IROFSC1 provides procedures and training relative to the proper filling of NaF traps including requirements for independent verification. Training will be conducted annually. A failure probability index of (-2) was selected for IROFS3. This corresponds to a single active engineered IROFS per NUREG-1520. IROFS3 will be tested annually.

Accident Identifier (See Table 3.7-1)	Description
DC1-4	The initial failure (initiating event) is the carbon traps become saturated with UF_6 caused by the operation of Cascade Dump System dumping to sodium fluoride (NaF) traps which have which have been saturated through excessive use. For the uncontrolled accident sequence, a UF_6 plug forms on the discharge line of the cascade dump vacuum pump discharge flange seal, causing high pressure and thus failing the cascade dump vacuum pump discharge flange seal, causing a release of UF_6 to process services corridor. This event was calculated to result in an intermediate consequence to the worker in the vicinity. For the controlled accident sequence, the preventive measures are an administrative control on the filling and monitoring of the use of NaF traps (IROFSC1), and a fail-safe high weight trip on the carbon filter upstream of the final dump vacuum pump (IROFS3). The frequency index number for the initiating event was determined to be (0). This frequency index is based on an annual frequency of one for the Cascade Dump System discharge to the NaF traps. The annual frequency for the Cascade Dump System discharge to the sodium fluoride NaF traps was assumed to be approximately one. This assumption is base on an assessment of the NEF annual Cascade Dump System actuation potential. The failure probability index of (-3) was selected for IROFSC1. This corresponds to an enhanced administrative IROFS per NUREG-1520. IROFSC1 provides procedures and training relative to the proper filling of NaF traps including requirements for independent verification. Training will be conducted annually. A failure probability index of (-2) was selected for IROFS3. This corresponds to a single active engineered IROFS per NUREG-1520. IROFS3 will be tested annually.

Accident Identifier (See Table 3.7-1)	Description
DC1-5	The initial failure (initiating event) is the carbon traps become saturated with UF_6 caused by the operation of Cascade Dump System bypassing the NaF traps due to operation of the bypass valve coincident with a worker located near the cascade dump vacuum pump. For the uncontrolled accident sequence, a UF_6 plug forms on the discharge line of the cascade dump vacuum pump discharge flange seal, causing high pressure and thus failing the cascade dump vacuum pump discharge flange seal, causing a release of UF_6 to the process services corridor. This event was calculated to result in a high consequence to the local worker. Impact to workers in the vicinity and impact to the public is evaluated in accident sequence DC1-6. For the controlled accident sequence, the preventive measure is IROFS3, a fail-safe high weight trip on the carbon filter upstream of the final dump vacuum pump. The frequency index number for the initiating event was determined to be (-4). This frequency index is based on an annual frequency of 1E-02 for the cascade dump system bypass valve inadvertent opening during the short duration (first ten minutes of the dump operation when dump flow is high), combined with a conditional probability that the worker is in the vicinity of a cascade dump vacuum pump, estimated at 1E-02 (100 hrs per year). The annual frequency for the cascade dump system bypass valve inadvertent opening during the short duration (first ten minutes of the dump operation when dump flow is high), is estimated to be 1E-02 based on evidence from history of similarly designed Urenco European plants, which have a combined plant history of greater than 30 yrs, and have not had a failure of this type. The cascade dump vacuum pumps are in a low occupancy area of the process services corridor. A worker would be adjacent of each pump outlet much less than 100 hrs per year (less than one percent of the year). A failure probability index of (-2) was selected for IROFS3. This corresponds to a single active engineered IROFS per NUREG-1520. IROFS3 will be tested annually.

Accident Identifier (See Table 3.7-1)	Description
DC1-6	The initial failure (initiating event) is the carbon traps become saturated with UF_6 caused by the operation of Cascade Dump System bypassing the NaF traps due to operation of the bypass valve. For the uncontrolled accident sequence, a UF_6 plug forms on the discharge line of the cascade dump vacuum pump discharge flange seal, causing high pressure and thus failing the cascade dump vacuum pump discharge flange seal, causing a release of UF_6 to the process services corridor. This event was calculated to result in an intermediate consequence to the worker in the vicinity. For the controlled accident sequence, the preventive measure is (IROFS3), a fail-safe high weight trip on the carbon filter upstream of the final dump rotary vane pump. The frequency index number for the initiating event was determined to be (-2). This frequency index is based on an annual frequency of 1E-02 for the cascade dump system bypass valve inadvertent opening during the short duration (first ten minutes of the dump operation when dump flow is high). The annual frequency for the cascade dump system bypass valve inadvertent opening during the short duration (first ten minutes of the dump operation when dump flow is high), is estimated to be 1E-02 based on evidence from history of similarly designed Urenco European plants, which have a combined plant history of greater than 30 yrs, and have not had a failure of this type. A failure probability index of (-2) was selected for IROFS3. This corresponds to a single active engineered IROFS per NUREG-1520. IROFS3 will be tested annually.

Accident Identifier (See Table 3.7-1)	Description
DC1-7	The initial failure (initiating event) is the occurrence of a dump operation following a period of time where the cascade dump valve has been exhibiting a small continuous leak. The leak would cause UF_6 from the cascade to enter the dump system, causing the NaF traps and the pump's carbon trap to become spent. Cascade dump operation is assumed to occur coincident with a worker located near the cascade dump vacuum pump. For the uncontrolled accident sequence, a UF_6 plug forms on the discharge line of the cascade dump vacuum pump discharge flange seal, causing high pressure and thus failing the cascade dump vacuum pump discharge flange seal, causing a release of UF_6 to the process services corridor. This event was calculated to result in a high consequence to the local worker. Impact to workers in the vicinity and impact to the pubic is evaluated in accident sequence DC1-8. For the controlled accident sequence, the preventive measure is (IROFS3), a fail-safe high weight trip on the carbon filter upstream of the final dump vacuum pump. The in-leaking UF_6 would be pumped away automatically, via a carbon trap to the GEVS. The carbon would adsorb the UF_6, gaining in weight to the point where the weight trip would stop the pump and prevent the hazard. The frequency index number for the initiating event was determined to be (-4). This frequency index is based on an annual frequency of 1E-02 for the cascade dump system valve leakage, combined with a conditional probability that the worker is in the vicinity of a cascade dump vacuum pump, estimated at 1E-02 (100 hrs per year). The annual frequency is estimated to be 1E-02 based on evidence from history of similarly designed Urenco European plants have not experienced leaking dump valves in these facility in 30 yrs for tens of similar items. The dump pumps are in a low occupancy area of the process services corridor. A worker would be adjacent of each pump outlet much less than 100 hrs per year (less than 1% of the year). A failure probability index of (-2) was selected for IROFS3. This corresponds to a single active engineered IROFS per NUREG-1520. IROFS3 will be tested annually.

Accident Identifier (See Table 3.7-1)	Description
DC1-8	The initial failure (initiating event) is the occurrence of a dump operation following a period of time where the cascade dump valve has been exhibiting a small continuous leak. The leak would cause UF_6 from the cascade to enter the dump system, causing the NaF traps and the pump's carbon trap to become spent. For the uncontrolled accident sequence, a UF_6 plug forms on the discharge line of the cascade dump vacuum pump discharge flange seal, causing high pressure and thus failing the cascade dump vacuum pump discharge flange seal, causing a release of UF_6 to the process services corridor. This event was calculated to result in an intermediate consequence to the worker in the vicinity. For the controlled accident sequence, the preventive measure is (IROFS3), a fail-safe high weight trip on the carbon filter upstream of the final dump vacuum pump. The in-leaking UF_6 would be pumped away automatically, via a carbon trap to the GEVS. The carbon would adsorb the UF_6, gaining in weight to the point where the weight trip would stop the pump and prevent the hazard. The frequency index number for the initiating event was determined to be (-2). This frequency index is based on an annual frequency of 1E-02 for the cascade dump system valve leakage. The annual frequency is estimated to be 1E-02 based on evidence from history of similarly designed Urenco European plants have not experienced leaking dump valves in these facility in 30 yrs for tens of similar items. A failure probability index of (-2) was selected for IROFS3. This corresponds to a single active engineered IROFS per NUREG-1520. IROFS3 will be tested annually.

Accident Identifier (See Table 3.7-1)	Description
DC1-9	The accident sequence is the failure of numerous components/systems/procedures leading to a criticality in a component being transported in interaction with a chemical dump trap. This description of this sequence is the following: (1) An atmospheric air leak within the dump system pipe work would allow moisture in to the evacuated buffer volume and NaF traps, and (2) The NaF traps would have no NaF inside, thereby increasing their internal volume significantly, and (3) When dump demands occur the moisture that has leaked inside would cause the UF_6 to break down into UO_2F_2 that settles in the NaF trap volume rather than being pulled by the pump into the smaller, weight tripped carbon trap, and (4) The weight trip on the carbon trap would have to fails to operate. For UF_6 to continue to flow from the cascade to the NaF traps the vacuum pump must continue to operate to provide a pressure differential. Even allowing for the settling of material in the NaF traps, a significant proportion would be adsorbed onto the carbon trap, increasing its weight to the point (10 kg (22 lb)) where the trip should operate, and (5) All three NaF traps would need to be optimally filled/moderated placed as close together as possible, and then an additional component, with optimally moderated UF_6 at the plant maximum five percent enrichment (e.g. a product pump or the vacuum cleaner), is brought close enough to interact. (i.e., failure of IROFS15) For the uncontrolled accident sequence, a product chemical trap containing moderated enriched uranium would have to undergo failures (1) through (5) above to result in a potential criticality event. For this accident sequence, a criticality event was assumed. A criticality event is assumed to result in a high consequence to the worker and public. For the controlled accident sequence, the preventive measures are: (1) an administrative control on the filling and monitoring of the use of NaF traps (IROFSC1), and (2) a fail-safe high weight trip on the carbon filter upstream of the final dump rotary vane pump (IROFS3).

Accident Identifier (See Table 3.7-1)	Description
DC1-9 (continued)	The frequency index number for the initiating event, based on the combination of (1) through (5) above, was conservatively assumed to be (-2). The NUREG-1520 criteria – No failures of this type in this facility in 30 years - applies. The failure frequency index was conservatively selected based on evidence from history of similarly designed Urenco European plants, with a combined plant history of greater than 30 years and have not had any criticality events. A failure probability index of (-2) was selected for IROFSC1. This corresponds to an administrative IROFS for routine planned operation per NUREG-1520. IROFSC1 provides procedures and training relative to proper filling of NaF traps including requirements for independent verification. Training will be conducted annually. A failure probability index of (-2) was selected for IROFS3. This corresponds to a single active engineered IROFS per NUREG-1520 criteria. IROFS3 will be tested annually. The detailed description of the interaction evaluations supporting the criticality safety requirements, associated safety margins and analysis assumptions is found in Chapter 5.
EC3-1	The initial failure (initiating event) is failure of criticality enrichment control by failing to properly control the UF_6 enrichment process. This failure is initiated by the improper setting of the cascade enrichment control devices. The maximum enrichment of a single cascade is limited by mechanical enrichment control devices. The initial set of conditions or combination of conditions, that need to be fulfilled to allow enrichments high enough to compromise the critical geometries and moderation controls in place, include the following: (1) The mechanical control enrichment device on each cascade must be broken, or not fitted, or fitted incorrectly; (2) When a change of enrichment occurs, the mechanical enrichment control device setting must be calculated incorrectly;

Accident Identifier (See Table 3.7-1)	Description
EC3-1 (continued)	(3) Independent checks on the setting calculation must fail to identify the error; (4) Cascade and assay samples must also not recognize the high enrichment, despite assay samples being analysed using the on-line mass spectrometer, producing representative results in minutes; (5) A leak must exist within the product system to cause breakdown build-up in an otherwise safe by geometry component, or allow moderator into the product cylinder; (6) The above errors must exist for a significant period of time to allow a significant build up of breakdown and/or moderator. The detailed description of the criticality safety evaluations, associated safety margins and analysis assumptions used in determining the conditions for criticality is found in Chapter 5. For the uncontrolled accident sequence there is a failure of criticality enrichment control by failing to properly control the UF_6 enrichment process. A criticality event is assumed to result for this accident sequence. A criticality event is assumed to result in a high consequence to the worker and public. The risk of this sequence, if uncontrolled, would be minimized by the high vacuum standard of the plant. For the controlled accident sequence, the preventive measures include: (1) an enhanced administrative control of the mechanical enrichment control device setting calculation (IROFSC6) and (2) an enhanced administrative control on the independent monitoring of cascade and assay enrichment levels following a change to the enrichment setting as well as a periodic check (IROFSC7). The frequency index number for the initiating event (failure of the mechanical device) is determined to be (-2), no failures of this type in this facility in 30 yrs per NUREG-1520 criteria. This failure frequency index was selected based on evidence from history of similarly designed Urenco European plants, which have a combined plant history of greater than 30 yrs, and have not had a failure of this type. It has been conservatively assumed that no credit for the initial conditions needed to preclude the failure has been accounted for in the frequency index.

Accident Identifier (See Table 3.7-1)	Description
EC3-1 (continued)	A failure probability index of (-2) was selected for IROFSC6. This corresponds to an enhanced administrative IROFS for routine planned operation per NUREG-1520. IROFSC6 provides for procedures and training relative to performing the mechanical enrichment control device setting calculations, including requirements for independent verification. Training will be conducted annually. A failure probability index of (-2) was selected for IROFSC7. This corresponds to an enhanced administrative IROFS for routine planned operation per NUREG-1520. IROFSC7 provides procedures and training relative to performing an independent verification/monitoring of cascade and assay enrichment levels. This verification will be accomplished independent from the IROFSC6 verification. Training will be conducted annually.
EC4-1	The initial failure (initiating event) is an operator error that results in an incorrect sampling sequence. This causes excessive flow of UF_6 resulting in the evacuating rig carbon trap becoming saturated. For the uncontrolled accident sequence, a UF_6 plug forms on the discharge line of the vacuum pump, causing high pressure in the vacuum pump and thus failing seals leading to a release of UF_6 to the process services corridor. This event has been calculated to result in a intermediate consequence to the worker. For the controlled accident sequence, the preventive measure is a fail-safe, hard-wired, high carbon trap weight trip of the vacuum pump (IROFS3). The frequency index number for the initiating event was determined to be (-2). The NUREG-1520 criteria – no failures of this type in this facility in 30 yrs – applies. This failure frequency index was selected based on evidence from history of similarly designed Urenco European plants, which have a combined plant history of greater than 30 yrs, and have not had a failure of this type. A failure probability index of (-2) was selected for IROFS3. This corresponds to a single active engineered IROFS per NUREG-1520 criteria. IROFS3 will be tested annually.

Accident Identifier (See Table 3.7-1)	Description
EC4-2	The initial failure (initiating event) is inadvertent alignment of the cascade sampling rig to the cascade product header when performing cascade sampling. This results in UF_6 being released into the SB GEVS with the potential for a criticality event. In the uncontrolled accident sequence, it is assumed that an operator error occurs related to the sampling sequence and the vacuum pump, rather than evacuating rig, is connected to the cascade product header. The carbon trap would fill up with UF_6 and eventually overflow to the vacuum pump where it may get pumped into the SB GEVS, mixing with moist air, forming solid UO_2F_2 that collects on the SB GEVS filters. A criticality event is assumed to result for this accident sequence. This event is assumed to have an intermediate consequence to the worker and public. The detailed description of the criticality safety evaluations, associated safety margins and analysis assumptions used in determining the conditions for criticality is found in Chapter 5. For the controlled accident sequence, the preventive measures are (1) a fail-safe hard-wired high carbon trap weight trip of the vacuum pump (IROFS3) and (2) a ^{235}U selective gamma monitor system that monitors the SB GEVS filters and electrostatic precipitator and trips the operating SB GEVS and automatically starts the standby SB GEVS train if Hi-Hi gamma levels are detected in the SB GEVS filters and bypasses and isolates the electrostatic precipitator if Hi-Hi gamma levels are detected in the electrostatic precipitator (IROFS8). The frequency index number for the initiating event was determined to be (-2). The NUREG-1520 criteria – no failures of this type in this facility in 30 yrs – applies. This failure frequency index was selected based on evidence from history of similarly designed Urenco European plants, which have a combined plant history of greater than 30 yrs, and have not had a failure of this type. A failure probability index of (-2) was selected for IROFS3. This corresponds to a single active engineered IROFS per NUREG-1520 criteria. IROFS3 will be tested annually. A failure probability index of (-2) was selected for IROFS8. This corresponds to a single active engineered IROFS per NUREG-1520 criteria. IROFS8 will be tested annually.

Accident Identifier (See Table 3.7-1)	Description
EC6-1	Criticality accident caused by a critical array of failed machines with a moist air leak, allowing breakdown products and hydrogenous material to accumulate. Based on an assessment of the probability of the required coincident failures, the annual probability of this accident is less than 1.0E-6. This yields an initiating event index of (-6). This probability meets definition of "not credible;" therefore, no IROFS are needed.
TP7-4	The initial failure (initiating event) is the failure of criticality safety control by having the contents of the post-mortem centrifuge machine emptied into a bag with the potential for a criticality event. The initial set of conditions that need to be fulfilled to allow a criticality to take place involving centrifuge post-mortem, are as follows: (1) A centrifuge machine in the highest enrichment part of the cascade must fail, either causing or caused by a small atmospheric air leak; (2) The atmospheric air leak must not be large enough to cause the cascade to trip on high pressure; (3) The machine must remain in the cascade and attached to the UF_6 supply long enough to allow more than a critical mass of enriched UF_6 to enter the recipient, react with moisture in the air leak, and settle in the recipient as UO_2F_2; (4) The failed machine must then be removed for post-mortem, and the additional weight of the recipient not noticed; (5) Administrative controls requiring the wastes from the post-mortem to be monitored for ^{235}U content before disposal would fail (during disposal is the most likely time that sufficient moderator could be introduced to the uranium). (6) Centrifuge post-mortem is a rare event.

Accident Identifier (See Table 3.7-1)	Description
TP7-4 (continued)	For the uncontrolled accident sequence, the bag containing fissile material, with the above set of initial conditions, could potentially result in a criticality event. This represents a failure of criticality safety control. A criticality event is assumed to result for this accident sequence. A criticality event is assumed to result in a high consequence to the worker and public. For the controlled accident sequence, the preventive measure is an enhanced administrative control on the weighing of centrifuges before post-mortem (IROFSC14). The frequency index number for the highly unlikely set of initial conditions required is determined to be: (-3), no failures in 30 yrs for tens of similar items IROFS in the industry per NUREG-1520. It should be noted that Urenco has experience of over a thousand centrifuge machine failures. A small percentage of these have undergone post-mortem and have not exhibited uranium mass more than one percent of a critical mass. During storage, prior to disposal, gamma monitoring of the failed machines would have highlighted any that contained excessive uranium mass, and there has been no evidence to suggest such a machine exists. The very low frequency index number is therefore considered to be justified based upon relevant experience with Urenco centrifuges. The failure probability index (-2) was selected for IROFSC14. This corresponds to an enhanced administrative IROFS per NUREG-1520. IROFSC14 provides procedures and training related to the weighing of centrifuges before post-mortem. Training will be conducted annually.

Accident Identifier (See Table 3.7-1)	Description
TP8-1	The initial failure (initiating event) is a one of the two Centrifuge Test Facility UF_6 vessels heater controller failure, causing a vessel high temperature. For the uncontrolled accident sequence, the UF_6 test vessel overheats and the vessel hydraulically ruptures due to the expansion of UF_6. Upon vessel rupture, the UF_6 content is released into the Centrifuge Test Facility. This sequence, if uncontrolled, would require significant time to cause a UF_6 release since the heat up rate is limited by the heater capacity. In addition, failure of a single heating circuit is not sufficient to cause the temperatures required for a hydraulic rupture. This event is assumed to have a high consequence to the worker and public. For the controlled accident sequence, the preventive measures are (1) a fail-safe hard-wired high temperature heater trip on each heating circuit (IROFSC15) and (2) a redundant independent fail-safe capillary high temperature heater trip of each circuit (IROFSC16). The frequency index number for the initiating event was determined to be (-2). The NUREG-1520 criteria – no failures of this type in this facility in 30 yrs – applies. This failure frequency index was selected based on evidence from history of similarly designed Urenco European plants, which have a combined plant history of greater than 30 yrs, and have not had a failure of this type. A failure probability index of (-2) was selected for IROFSC15. This corresponds to a single active engineered IROFS per NUREG-1520. IROFSC15 will be tested annually. A failure probability index of (-2) was selected for IROFSC16. This corresponds to a single active engineered IROSF per NUREG-1520. IROFSC16 will be tested annually.

Accident Identifier (See Table 3.7-1)	Description
TP8-2	The initial failure (initiating event) is the Centrifuge Test Facility vent carbon trap becomes saturated with UF_6 caused by operator mis-alignment of the vacuum pump to the feed vessel. For the uncontrolled accident sequence, a UF_6 plug forms on the discharge of the vacuum pump, causing high pressure in the vacuum pump and thus failing seals leading to a release of UF_6 to the Centrifuge Test Facility. This event has been calculated to result in an intermediate consequence to the worker. For the controlled accident sequence, the preventive measure is a fail-safe, hard-wired, high carbon trap weight trip of the vacuum pump (IROFS3). The frequency index number for the initiating event was determined to be (-2). The NUREG-1520 criteria – no failures of this type in this facility in 30 yrs – applies. This failure frequency index was selected based on evidence from history of similarly designed Urenco European plants, which have a combined plant history of greater than 30 yrs, and have not had a failure of this type. A failure probability index of (-2) was selected for IROFS3. This corresponds to a single active engineered IROFS per NUREG-1520 criteria. IROFS3 will be tested annually.

(This page intentionally left blank)

Table 3.7-3 External Events And Fire Accident Sequences And Risk Index

Accident Identifier	Initiating Event Index	Preventive Safety Parameter 1 or IROFS 1 Failure Index	Preventive Safety Parameter 2 or IROFS 2 Failure Index	Mitigation IROFS Failure Index	Likelihood Index T Uncontrolled (U) / Controlled (C)	Likelihood Category	Consequence Category (Type of Accident)	Risk Index (h= f x g) Uncontrolled (U) / Controlled (C)	Comments and Recommendations
	(a)	(b)	(c)	(d)	(e)	(f)	(g)	(h)	
EE-Aircraft	-6	N/A	N/A	N/A	N/A	N/A	N/A	N/A	Not Credible Event
EE-Pipeline	-5	N/A	N/A	N/A	-5 (U)	1	3 (T)	3 (U)	Acceptable Risk
EE-Highway	-5	N/A	N/A	N/A	-5(U)	1	3(T)	3(U)	Acceptable Risk
EE-Other Nearby Facilities	-6	N/A	N/A	N/A	N/A	N/A	N/A	N/A	Not Credible Event
EE-Railroad	-6	N/A	N/A	N/A	N/A	N/A	N/A	N/A	Not Credible Event
EE-CUB-GAS	-5	N/A	N/A	N/A	-5 (U)	1	3 (T)	3 (U)	Acceptable Risk
EE-Flood	-6	N/A	N/A	N/A	N/A	N/A	N/A	N/A	Not Credible Event
EE-Local Precip.	-2	N/A	N/A	N/A	-2 (U)	3	3 (T)	9 (U)	IROFS Required
EE-Local Precip.	-5	IROFS27 modifies initiating event index to “highly unlikely”	N/A	N/A	-5 (C)	1	3 (T)	3 (C)	Acceptable Risk
EE-Snow	-2	N/A	N/A	N/A	-2 (U)	3	3 (T)	9 (U)	IROFS Required
EE-Snow	-5	IROFS27 modifies initiating event index to “highly unlikely”	N/A	N/A	-5 (C)	1	3 (T)	3 (C)	Acceptable Risk

Table 3.7-3 External Events And Fire Accident Sequences And Risk Index

Accident Identifier	Initiating Event Index	Preventive Safety Parameter 1 or IROFS 1 Failure Index	Preventive Safety Parameter 2 or IROFS 2 Failure Index	Mitigation IROFS Failure Index	Likelihood Index T Uncontrolled (U) / Controlled (C)	Likelihood Category	Consequence Category (Type of Accident)	Risk Index (h= f x g) Uncontrolled (U) / Controlled (C)	Comments and Recommendations
	(a)	(b)	(c)	(d)	(e)	(f)	(g)	(h)	
EE-Tornado, Tornado Missile & High Wind	-2	N/A	N/A	N/A	-2 (U)	3	3 (T)	9 (U)	IROFS Required
EE-Tornado, Tornado Missile & High Wind	-5	IROFS27 modifies initiating event index to "highly unlikely"	N/A	N/A	-5 (C)	1	3 (T)	3 (C)	Acceptable Risk
EE-Internal Flooding from On-site Tanks and Water Impound-ments	-2	N/A	N/A	N/A	-2 (U)	3	3 (T)	9 (U)	IROFS Required
EE-Internal Flooding from On-site Tanks and Water Impound-ments	-5	IROFS44 modifies initiating event index to "highly unlikely"	N/A	N/A	-5 (C)	1	3 (T)	3 (C)	Acceptable Risk
SEISMIC-1a (UF_6 Areas)	-2	N/A	N/A	N/A	-2 (U)	3	3 (T)	9 (U)	IROFS Required
SEISMIC-1b (UF_6 Areas)	-2	N/A	N/A	IROFS27	-2 (C)	3	2 (T)	6 (C)	Additional IROFS Required
SEISMIC-1c (UF_6 Areas)	-2	N/A	N/A	IROFS27 IROFS26 (Success)	-2 (C)	3	2 (T)	6 (C)	Additional IROFS Required

Table 3.7-3 External Events And Fire Accident Sequences And Risk Index

Accident Identifier	Initiating Event Index	Preventive Safety Parameter 1 or IROFS 1 Failure Index	Preventive Safety Parameter 2 or IROFS 2 Failure Index	Mitigation IROFS Failure Index	Likelihood Index T Uncontrolled (U) / Controlled (C)	Likelihood Category	Consequence Category (Type of Accident)	Risk Index (h= f x g) Uncontrolled (U) / Controlled (C)	Comments and Recommendations
	(a)	(b)	(c)	(d)	(e)	(f)	(g)	(h)	
SEISMIC-1d (UF_6 Areas)	-2	N/A	N/A	IROFS27 IROFS26 (Failure, -2)	-4 (C)	2	2 (T)	4 (C)	Acceptable Risk
SEISMIC-1e (UF_6 Areas)	-2	N/A	N/A	IROFS27 IROFS26 (Success) IROFS41 (Success)	-2 (C)	3	1 (T)	3 (C)	Acceptable Risk
SEISMIC-1f (UF_6 Areas)	-2	N/A	N/A	IROFS27 IROFS26 (Success) IROFS41 (Failure, -2)	-4 (C)	2	2 (T)	4 (C)	Acceptable Risk
SEISMIC-2a (Cascades)	-2	N/A	N/A	N/A	-2 (U)	3	3 (T)	9 (U)	IROFS Required
SEISMIC-2b (Cascades)	-2	N/A	N/A	IROFS27	-2 (C)	3	3 (T)	9 (C)	Additional IROFS Required
SEISMIC-2c (Cascades)	-2	N/A	N/A	IROFS27 IROFS26 (Success)	-2 (C)	3	2 (T)	6 (C)	Additional IROFS Required

Table 3.7-3 External Events And Fire Accident Sequences And Risk Index

Accident Identifier	Initiating Event Index	Preventive Safety Parameter 1 or IROFS 1 Failure Index	Preventive Safety Parameter 2 or IROFS 2 Failure Index	Mitigation IROFS Failure Index	Likelihood Index T Uncontrolled (U) / Controlled (C)	Likelihood Category	Consequence Category (Type of Accident)	Risk Index (h= f x g) Uncontrolled (U) / Controlled (C)	Comments and Recommendations
	(a)	(b)	(c)	(d)	(e)	(f)	(g)	(h)	
SEISMIC-2d (Cascades)	-2	N/A	N/A	IROFS27 IROFS26 (Failure, -2) (Duration, -1)	-5 (C)	1	3 (T)	3 (C)	Acceptable Risk
SEISMIC-2e (Cascades)	-2	N/A	N/A	IROFS27 IROFS26 (Success) IROFS41 (Success	-2 (C)	3	1 (T)	3 (C)	Acceptable Risk
SEISMIC-2f (Cascades)	-2	N/A	N/A	IROFS27 IROFS26 (Success) IROFS41 (Failure, -2)	-4 (C)	2	2 (T)	4 (C)	Acceptable Risk
SEISMIC-3a (Blending & Liquid Sampling)	-2	N/A	N/A	N/A	-2 (U)	3	3 (T)	9 (U)	IROFS Required
SEISMIC-3b (Blending & Liquid Sampling)	-2	N/A	N/A	IROFS27	-2 (C)	3	2 (T)	6 (C)	Additional IROFS Required

Table 3.7-3 External Events And Fire Accident Sequences And Risk Index

Accident Identifier	Initiating Event Index	Preventive Safety Parameter 1 or IROFS 1 Failure Index	Preventive Safety Parameter 2 or IROFS 2 Failure Index	Mitigation IROFS Failure Index	Likelihood Index T Uncontrolled (U) / Controlled (C)	Likelihood Category	Consequence Category (Type of Accident)	Risk Index (h= f x g) Uncontrolled (U) / Controlled (C)	Comments and Recommendations
	(a)	(b)	(c)	(d)	(e)	(f)	(g)	(h)	
SEISMIC-3c (Blending & Liquid Sampling)	-2	N/A	N/A	IROFS27 IROFS26 (Success)	-2 (C)	3	2 (T)	6 (C)	Additional IROFS Required
SEISMIC-3d (Blending & Liquid Sampling)	-2	N/A	N/A	IROFS27 IROFS26 (Failure, -2)	-4 (C)	2	2 (T)	4 (C)	Acceptable Risk
SEISMIC-3e (Blending & Liquid Sampling)	-2	N/A	N/A	IROFS27 IROFS26 (Success) IROFS41 (Success)	-2 (C)	3	1 (T)	3 (C)	Acceptable Risk
SEISMIC-3f (Blending & Liquid Sampling)	-2	N/A	N/A	IROFS27 IROFS26 (Success) IROFS41 (Failure, -2)	-4 (C)	2	2 (T)	4 (C)	Acceptable Risk
SEISMIC -5 (Liquid Sampling Autoclave)	-2	N/A	N/A	N/A	-2 (U)	3	3 (T)	9 (U)	IROFS Required

Table 3.7-3 External Events And Fire Accident Sequences And Risk Index

Accident Identifier	Initiating Event Index	Preventive Safety Parameter 1 or IROFS 1 Failure Index	Preventive Safety Parameter 2 or IROFS 2 Failure Index	Mitigation IROFS Failure Index	Likelihood Index T Uncontrolled (U) / Controlled (C)	Likelihood Category	Consequence Category (Type of Accident)	Risk Index (h= f x g) Uncontrolled (U) / Controlled (C)	Comments and Recommendations
	(a)	(b)	(c)	(d)	(e)	(f)	(g)	(h)	
SEISMIC -5 (Liquid Sampling Autoclave)	-5	IROFS28 modifies initiating event index to "highly unlikely"	N/A	N/A	-5 (C)	1	3 (T)	3 (C)	Acceptable Risk
FF1-1	-2	N/A	N/A	N/A	-2 (U)	3	3 (T)	9 (U)	IROFS Required
FF1-1	-2	IROFS35 -3	N/A	N/A	-5 (C)	1	3 (T)	3 (C)	Acceptable Risk
FF1-2	-2	N/A	N/A	N/A	-2 (U)	3	3 (T)	9 (U)	IROFS Required
FF1-2	-2	IROFS36 -3	N/A	N/A	-5 (C)	1	3 (T)	3 (C)	Acceptable Risk
FF5-1	-2	N/A	N/A	N/A	-2 (U)	3	3 (T)	9 (U)	IROFS Required
FF5-1	-2	IROFS36 -3	N/A	N/A	-5 (C)	1	3 (T)	3 (C)	Acceptable Risk
FF6-1	-2	N/A	N/A	N/A	-2 (U)	3	3 (T)	9 (U)	IROFS Required
FF6-1	-2	IROFS35 -3	N/A	N/A	-5 (C)	1	3 (T)	3 (C)	Acceptable Risk
FF6-2	-2	N/A	N/A	N/A	-2 (U)	3	3 (T)	9 (U)	IROFS Required

Table 3.7-3 External Events And Fire Accident Sequences And Risk Index

Accident Identifier	Initiating Event Index	Preventive Safety Parameter 1 or IROFS 1 Failure Index	Preventive Safety Parameter 2 or IROFS 2 Failure Index	Mitigation IROFS Failure Index	Likelihood Index T Uncontrolled (U) / Controlled (C)	Likelihood Category	Consequence Category (Type of Accident)	Risk Index (h= f x g) Uncontrolled (U) / Controlled (C)	Comments and Recommendations
	(a)	(b)	(c)	(d)	(e)	(f)	(g)	(h)	
FF6-2	-2	IROFS36 -3	N/A	N/A	-5 (C)	1	3 (T)	3 (C)	Acceptable Risk
FF7-1	-2	N/A	N/A	N/A	-2 (U)	3	3 (T)	9 (U)	IROFS Required
FF7-1	-2	IROFS36 -3	N/A	N/A	-5 (C)	1	3 (T)	3 (C)	Acceptable Risk
FF8-1	-2	N/A	N/A	N/A	-2 (U)	3	3 (T)	9 (U)	IROFS Required
FF8-1	-2	IROFS35 -3	N/A	N/A	-5 (C)	1	3 (T)	3 (C)	Acceptable Risk
FF8-2	-2	N/A	N/A	N/A	-2 (U)	3	3 (T)	9 (U)	IROFS Required
FF8-2	-2	IROFS36 -3	N/A	N/A	-5 (C)	1	3 (T)	3 (C)	Acceptable Risk
FF11-1	-2	N/A	N/A	N/A	-2 (U)	3	3 (T)	9 (U)	IROFS Required
FF11-1	-2	IROFS35 -3	N/A	N/A	-5 (C)	1	3 (T)	3 (C)	Acceptable Risk
FF11-2	-2	N/A	N/A	N/A	-2 (U)	3	3 (T)	9 (U)	IROFS Required
FF11-2	-2	IROFS36 -3	N/A	N/A	-5 (C)	1	3 (T)	3 (C)	Acceptable Risk

Table 3.7-3 External Events And Fire Accident Sequences And Risk Index

Accident Identifier	Initiating Event Index	Preventive Safety Parameter 1 or IROFS 1 Failure Index	Preventive Safety Parameter 2 or IROFS 2 Failure Index	Mitigation IROFS Failure Index	Likelihood Index T Uncontrolled (U) / Controlled (C)	Likelihood Category	Consequence Category (Type of Accident)	Risk Index (h= f x g) Uncontrolled (U) / Controlled (C)	Comments and Recommendations
	(a)	(b)	(c)	(d)	(e)	(f)	(g)	(h)	
FF15-1	-2	N/A	N/A	N/A	-2 (U)	3	3 (T)	9 (U)	IROFS Required
FF15-1	-2	IROFS35 -3	N/A	N/A	-5 (C)	1	3 (T)	3 (C)	Acceptable Risk
FF16-1	-2	N/A	N/A	N/A	-2 (U)	3	3 (T)	9 (U)	IROFS Required
FF16-1	-2	IROFS36 -3	N/A	N/A	-5 (C)	1	3 (T)	3 (C)	Acceptable Risk
FF16-2	-2	N/A	N/A	N/A	-2 (U)	3	3 (T)	9 (U)	IROFS Required
FF16-2	-2	IROFS36 -3	N/A	N/A	-5 (C)	1	3 (T)	3 (C)	Acceptable Risk
FF21-1	-2	N/A	N/A	N/A	-2 (U)	3	3 (T)	9 (U)	IROFS Required
FF21-1	-2	IROFS35 -3	N/A	N/A	-5 (C)	1	3 (T)	3 (C)	Acceptable Risk
FF21-2	-2	N/A	N/A	N/A	-2 (U)	3	3 (T)	9 (U)	IROFS Required
FF21-2	-2	IROFS36 -3	N/A	N/A	-5 (C)	1	3 (T)	3 (C)	Acceptable Risk
FF23-1	-2	N/A	N/A	N/A	-2 (U)	3	3 (T)	9 (U)	IROFS Required

Table 3.7-3 External Events And Fire Accident Sequences And Risk Index

Accident Identifier	Initiating Event Index	Preventive Safety Parameter 1 or IROFS 1 Failure Index	Preventive Safety Parameter 2 or IROFS 2 Failure Index	Mitigation IROFS Failure Index	Likelihood Index T Uncontrolled (U) / Controlled (C)	Likelihood Category	Consequence Category (Type of Accident)	Risk Index (h= f x g) Uncontrolled (U) / Controlled (C)	Comments and Recommendations
	(a)	(b)	(c)	(d)	(e)	(f)	(g)	(h)	
FF23-1	-2	IROFS35 -3	N/A	N/A	-5 (C)	1	3 (T)	3 (C)	Acceptable Risk
FF23-2	-2	N/A	N/A	N/A	-2 (U)	3	3 (T)	9 (U)	IROFS Required
FF23-2	-2	IROFS36 -3	N/A	N/A	-5 (C)	1	3 (T)	3 (C)	Acceptable Risk
FF24-1	-2	N/A	N/A	N/A	-2 (U)	3	3 (T)	9 (U)	IROFS Required
FF24-1	-2	IROFS35 -3	N/A	N/A	-5 (C)	1	3 (T)	3 (C)	Acceptable Risk
FF25-1	-2	N/A	N/A	N/A	-2 (U)	3	3 (T)	9 (U)	IROFS Required
FF25-1	-2	IROFS36 -3	N/A	N/A	-5 (C)	1	3 (T)	3 (C)	Acceptable Risk
FF25-2a	-2	N/A	N/A	N/A	-2 (U)	3	3 (T)	9 (U)	IROFS Required
FF25-2b	-2	IROFS36 (Success)	N/A	N/A	-2 (C)	3	2 (T)	6 (C)	Additional IROFS Required
FF25-2c	-2	IROFS36 (Success)	N/A	IROFS37 (Success)	-2 (C)	3	1 (T)	3 (C)	Acceptable Risk
FF25-2d	-2	IROFS36 (Success)	N/A	IROFS37 -2 (Failure)	-4 (C)	2	2 (T)	4 (C)	Acceptable Risk

Table 3.7-3 External Events And Fire Accident Sequences And Risk Index

Accident Identifier	Initiating Event Index	Preventive Safety Parameter 1 or IROFS 1 Failure Index	Preventive Safety Parameter 2 or IROFS 2 Failure Index	Mitigation IROFS Failure Index	Likelihood Index T Uncontrolled (U) / Controlled (C)	Likelihood Category	Consequence Category (Type of Accident)	Risk Index (h= f x g) Uncontrolled (U) / Controlled (C)	Comments and Recommendations
	(a)	(b)	(c)	(d)	(e)	(f)	(g)	(h)	
FF25-2e	-2	IROFS36 -3 (Failure)	N/A	IROFS37 (Success)	-5 (C)	1	3 (T)	3 (C)	Acceptable Risk
FF25-2f	-2	IROFS36 -3 (Failure)	N/A	IROFS37 -2 (Failure)	-7 (C)	1	3 (T)	3 (C)	Acceptable Risk
FF38-1	-2	N/A	N/A	N/A	-2 (U)	3	3 (T)	9 (U)	IROFS Required
FF38-1	-2	IROFS35 -3	N/A	N/A	-5 (C)	1	3 (T)	3 (C)	Acceptable Risk
FF38-2	-2	N/A	N/A	N/A	-2 (U)	3	3 (T)	9 (U)	IROFS Required
FF38-2	-2	IROFS36 -3	N/A	N/A	-5 (C)	1	3 (T)	3 (C)	Acceptable Risk
FF42-1	-2	N/A	N/A	N/A	-2 (U)	3	3 (T)	9 (U)	IROFS Required
FF42-1	-2	IROFS36 -3	N/A	N/A	-5 (C)	1	3 (T)	3 (C)	Acceptable Risk
FF43-1	-2	N/A	N/A	N/A	-2 (U)	3	3 (T)	9 (U)	IROFS Required
FF43-1	-2	IROFS36 -3	N/A	N/A	-5 (C)	1	3 (T)	3 (C)	Acceptable Risk
FF43-2	-2	N/A	N/A	N/A	-2 (U)	3	3 (T)	9 (U)	IROFS Required

Table 3.7-3 External Events And Fire Accident Sequences And Risk Index

Accident Identifier	Initiating Event Index	Preventive Safety Parameter 1 or IROFS 1 Failure Index	Preventive Safety Parameter 2 or IROFS 2 Failure Index	Mitigation IROFS Failure Index	Likelihood Index T Uncontrolled (U) / Controlled (C)	Likelihood Category	Consequence Category (Type of Accident)	Risk Index (h= f x g) Uncontrolled (U) / Controlled (C)	Comments and Recommendations
	(a)	(b)	(c)	(d)	(e)	(f)	(g)	(h)	
FF43-2	-2	IROFS36 -3	N/A	N/A	-5 (C)	1	3 (T)	3 (C)	Acceptable Risk
FF44-1	-2	N/A	N/A	N/A	-2 (U)	3	3 (T)	9 (U)	IROFS Required
FF44-1	-2	IROFS36 -3	N/A	N/A	-5 (C)	1	3 (T)	3 (C)	Acceptable Risk

Table 3.7-4 External Events and Fire Accident Descriptions

Accident Identifier (See Table 3.7-3)	Description
EE-AIRCRAFT	Aircraft crash into facility from local airport traffic and commercial or military routes in the vicinity of the facility meets the definition of not credible. Based on detailed probabilistic analysis, the annual probability of an aircraft crash onto the site is less than 1.0E-6 (see Section 3.2.1.2.4). This yields an initiating event index of (-6). This probability meets definition of “not credible;” therefore, no IROFS are needed.
EE-PIPELINE	Oil industry pipelines located near the facility. Based on detailed probabilistic analyses, the hazards due to thermal radiation, missile generation and plant contamination by gas and/or explosion were shown to have an annual probability less than 1.0E-5 (see Section 3.2.2.4) and an initiating index of (-5) is appropriate. This meets the definition of “highly unlikely,” therefore, no IROFS are needed. Consequence category conservatively assumed as high.
EE-HIGHWAY	Potential adverse impact to the facility from chemical releases or explosions from trucks on nearby highway was evaluated. Detailed probabilistic analyses show the annual probability of an explosion adversely impacting the plant is less than 1.0E-5 (see Section 3.2.1.2) and an initiating event index of (-5) is appropriate. This meets the definition of “highly unlikely”, therefore, no IROFS are needed. Consequence category conservatively assumed as high.
EE-OTHER NEARBY FACILITIES	Potential adverse impact to the facility from chemical releases/explosions from nearby industrial or military facilities. No such facilities identified within proximity to enrichment plant. Therefore, an initiating event index of (-6) is appropriate which meets the definition of “not credible” and no IROFS are needed.
EE-RAILROAD	Potential adverse impact to the facility from chemical releases/explosions from nearby railroad traffic. Rail spur to the Waste Control Specialists facility along north side of NEF site does not transport explosive materials. No other railroads identified within proximity to the facility (see Section 3.2.1.2.2). Therefore, an initiating event index of (-6) is appropriate which meets the definition of “not credible” and no IROFS are needed.

Table 3.7-4 External Events and Fire Accident Descriptions

Accident Identifier (See Table 3.7-3)	Description
EE-CUB-GAS	Potential adverse impact to the facility from natural gas release in the Central Utilities Building (CUB) and subsequent explosion. Natural gas used to fire plant boiler. The initiating event is an assumed explosion in the CUB that could potentially impact nearby UF_6 areas in nearby adjacent buildings. Hazard shown by probabilistic analysis to be less than 1E-05 which meets definition of "highly unlikely," therefore, an initiating event index of (-5) is appropriate and no IROFS are needed. Consequence category conservatively assumed as high.
EE-FLOOD	No credible sources of river or upstream dam flooding exist at the site. This yields an initiating event index of (-6). This probability meets definition of "not credible," therefore, no IROFS are needed.
EE-LOCAL PRECIP	Flooding due to local intense precipitation of UF_6 areas and potential UF_6 release from process systems and/or criticality event. Scenarios include: (1) excessive roof ponding beyond design capacity of roof and (2) interior building flooding from flood waters flowing and/or ponded around plant structures. The initiating event is an uncontrolled flood with assumed high consequences. Without explicit design basis, conservatively assumed initiating event index of (-2) which would be typical of normal building code requirements. For the controlled event: (1) design basis that roof parapet height low enough to limit excessive ponding or adequate scuppers to limit maximum ponding is IROFS27 and (2) local topography around buildings and UBC Storage Pad graded to preclude excessive flooding and/or ponding during local intense precipitation is IROFS27. The design basis local intense precipitation (see Section 3.2.3.4.4, was selected to meet the definition of "highly unlikely." With this design basis and features specified by IROFS27, the initiating event index is modified to (-5).

Table 3.7-4 External Events and Fire Accident Descriptions

Accident Identifier (See Table 3.7-3)	Description
EE-SNOW	Excessive snow load on roofs of UF_6 areas leading to roof failures and potential UF_6 release from process systems. The uncontrolled event is an excessive snow load above normal building code design loads leading to roof failure and impacts on UF_6 process systems leading to UF_6 release. The event is assumed to have high consequences. Without explicit design basis, conservatively assumed initiating event index of (-2) which is appropriate for normal building code design. For the controlled event, the roofs are designed to maximum winter precipitation load shown to be "highly unlikely." This design snow load was selected to meet the definition of "highly unlikely." An initiating event index of (-5) is appropriate. Details on the development of this snow load are provided in Section 3.2.3.3. The design basis roof snow load is IROFS27.
EE-TORNADO, TORNADO MISSILE & HIGH WIND	Excessive tornado, tornado missile and high wind loads leading to building failure at UF_6 areas and potential UF_6 release from process systems. The uncontrolled event is excessive tornado loads, tornado missile loads and high wind loads above normal building code design levels leading to building failure and impacts on UF_6 process systems leading to UF_6 release. The event is assumed to have high consequences. Without explicit design basis, conservatively assumed initiating event index of (-2) which is appropriate for normal building code design. For the controlled event, buildings are designed to tornado, tornado missile and wind loads shown to be "highly unlikely." Details on the development of the tornado, tornado missile and high wind loads are provided in Section 3.2.3.4.1. These loads have an annual probability of exceedance of 1E-05 and an initiating event index of (-5) is appropriate. The design basis for tornado, tornado missiles and high wind is IROFS27.

Accident Identifier (See Table 3.7-3)	Description
EE-INTERNAL FLOODING FROM ON-SITE TANKS AND WATER IMPOUNDMENTS	Flooding due to catastrophic failure of above ground liquid storage tanks and water impoundments of UF_6 areas and potential UF_6 release from process systems and/or criticality event. The uncontrolled event is failure of above ground liquid storage tanks that contain sufficient contents to flood critical plant areas and/or damage structures and systems impacting UF_6 process systems leading to UF_6 release. The event is assumed to have high consequences. Without explicit controls, conservatively assumed initiating event index of (-2) which would be typical of normal design requirements. For the controlled event, above ground liquid storage tanks and water impoundments will be shown either by design, amount of contents, or physical location, not to pose a flooding risk that could damage critical structures and/or systems under an assumed catastrophic failure and release of full contents. This is IROFS44 which will make this scenario "highly unlikely."
EE-SEISMIC-1 (UF_6 Areas)	Excessive seismic motions imposed on non-seismically qualified buildings, beyond normal building code design, and beyond the capacity of UF_6 piping systems could lead to building collapse, breaching of UF_6 systems, and ultimately a UF_6 release. The UF_6 cascades and piping systems do not have an explicit seismic design basis. An initiating event index of (-2) has been conservatively assumed. Information on the annual frequency of earthquakes is provided in Section 3.2.6.4. The peak horizontal ground acceleration at an annual frequency of 1E-02 is approximately 0.01g. The peak horizontal ground acceleration at an annual frequency of 1E-03 is approximately 0.05g. The seismic capacity of the UF_6 piping systems is assumed to be capable of maintaining UF_6 confinement to at least a 0.01g earthquake. Actual seismic capacity of the piping is likely to be higher than 0.01g. Therefore, it is conservative to assign an initiating event index to UF_6 piping failure of (-2). The uncontrolled event is for the UF_6 Areas. The seismic event leads to building failure and impacts on UF_6 process systems leading to UF_6 release. The event is assumed to have high consequences. For the controlled event, buildings are designed to a seismic level with an annual probability of 1.0E-4. Details of the development of the seismic design basis are provided in Section 3.2.6. The seismic design basis selected for the facility is based on a site-specific seismic hazard assessment for the NEF site.

Accident Identifier (See Table 3.7-3)	Description
EE-SEISMIC-1 (UF_6 Areas) (continued)	The design basis earthquake (DBE) has been selected as the 10,000-yr (1.0E-4 mean annual probability) earthquake. This DBE will be used in the detailed design process to demonstrate compliance with the overall ISA performance requirements. This will be accomplished by confirmatory seismic performance calculations for the seismic IROFS during detailed design. The objective will be to demonstrate that use of this DBE will achieve a likelihood of unacceptable performance of less than approximately 1.0E-5 per year. The difference between the mean annual probabilities for design (1.0E-4) and performance (1.0E-5) is achieved through conservatism in the design (factors of safety), elasticity in the structures, and conservatism in the evaluation of the design. Use of this approach will result in a “highly unlikely” event likelihood for exceeding the seismic capacity of the buildings and an initiating event index of (-5) is appropriate. Since the initiating event index for the UF_6 piping (-2) is more limiting than the seismic capacity of the buildings (-5), the (-2) is used as the initiating event index for all seismic cases. Accident Identifier SEISMIC-1a: Uncontrolled case; initiating event index (-2) as described above. As discussed above, this is a high consequence category of (3). Risk index becomes (9). Therefore, IROFS required. The building seismic design basis (1.0E-4 and likelihood of unacceptable performance 1.0E-5) is IROFS27. Accident Identifier SEISMIC-1b: Add IROFS 27, initiating event index (-2) as described above. As a result of IROFS27, the consequence analysis shows that the consequences have been mitigated to an intermediate category (2). The risk index is (6), therefore, additional IROFS are required. The HVAC system will also be designed to automatically trip on a seismic event. HVAC trip is IROFS26. Accident Identifier SEISMIC-1c: Add IROFS26, initiating event index (-2) as described above. As a result of the addition of IROFS26, consequence analysis shows that the consequences have been further mitigated but still at an intermediate category (2). The resulting risk index is (6), therefore, additional IROFS are required.

Accident Identifier (See Table 3.7-3)	Description
EE-SEISMIC-1 (UF_6 Areas) (continued)	Accident Identifier SEISMIC-1d: Evaluate failure of IROFS26. A failure probability index of (-2) was selected for IROFS26. This corresponds to a single active engineered IROFS per NUREG-1520. A failure duration index of (0) was selected for UF_6 Areas' portion of IROFS26 corresponding to annual testing per NUREG-1520. Consequence category is intermediate (2), same as for Accident Identifier SEISMIC-1b. The resulting risk index is (4) which is acceptable risk. Building leakage to outside following HVAC trip is limited by design features. Leakage limiting design features of building is IROFS41. Accident Identifier SEISMIC-1e: Add IROFS41, initiating event index (-2) as described above. As a result of the addition of IROFS41, consequence analysis shows that consequences have been further mitigated to low (1), yielding a risk index of (3). This is acceptable risk. Accident Identifier SEISMIC-1f: Evaluate failure of IROFS41 with success of IROFS26. A failure probability index of (-2) was conservatively selected for IROFS41 which is a single passive engineered IROFS per NUREG-1520. The resulting consequence category is intermediate (2), same as for Accident Identifier SEISMIC-1c. Risk index is (4) which is acceptable.
EE-SEISMIC-2 (Cascades)	Excessive seismic motions imposed on non-seismically qualified buildings, beyond normal building code design, and beyond the capacity of UF_6 piping and cascade systems could lead to building collapse, breaching of UF_6 systems, and ultimately a UF_6 release. The UF_6 cascades and piping systems do not have an explicit seismic design basis. An initiating event index of (-2) has been conservatively assumed. Information on the annual frequency of earthquakes is provided in Section 3.2.6.4. The peak horizontal ground acceleration at an annual frequency of 1E-02 is approximately 0.01g. The peak horizontal ground acceleration at an annual frequency of 1E-03 is approximately 0.05g. The seismic capacity of the UF_6 piping systems is assumed to be capable of maintaining UF_6 confinement to at least a 0.01g earthquake. Actual seismic capacity of the piping is likely to be higher than 0.01g. Therefore, it is conservative to assign an initiating event index to UF_6 piping failure of (-2).

Accident Identifier (See Table 3.7-3)	Description
EE-SEISMIC-2 (Cascades) (continued)	The uncontrolled event is for the Cascade Halls. The seismic event leads to building failure and impacts on centrifuges leading to UF_6 release. The event is assumed to have high consequences. For the controlled event, buildings are designed to a seismic level with an annual probability of 1.0E-4. Details of the development of the seismic design basis are provided in Section 3.2.6. The seismic design basis selected for the facility is based on a site-specific seismic hazard assessment for the NEF site. The design basis earthquake (DBE) has been selected as the 10,000-yr (1.0E-4 mean annual probability) earthquake. This DBE will be used in the detailed design process to demonstrate compliance with the overall ISA performance requirements. This will be accomplished by confirmatory seismic performance calculations for the seismic IROFS during detailed design. The objective will be to demonstrate that use of this DBE will achieve a likelihood of unacceptable performance of less than approximately 1.0E-5 per year. The difference between the mean annual probabilities for design (1.0E-4) and performance (1.0E-5) is achieved through conservatism in the design (factors of safety), elasticity in the structures, and conservatism in the evaluation of the design. Use of this approach will result in a “highly unlikely” event likelihood for exceeding the seismic capacity of the buildings and an initiating event index of (-5) is appropriate. Since the initiating event index for the UF_6 piping (-2) is more limiting than the seismic capacity of the buildings (-5), the (-2) is used as the initiating event index for all seismic cases. Accident Identifier SEISMIC-2a: Uncontrolled case; initiating event index (-2) as described above. As discussed above, this is a high consequence category of (3). Risk index becomes (9). Therefore, IROFS required. The building seismic design basis (1.0E-4 and likelihood of unacceptable performance (1.0E-5)) is IROFS27. Accident Identifier SEISMIC-2b: Add IROFS 27, initiating event index (-2) as described above. As a result of IROFS27, the consequence analysis shows that the consequences remain high category (3). The risk index is (9), therefore, additional IROFS are required.

Accident Identifier (See Table 3.7-3)	Description
EE-SEISMIC-2 (Cascades) (continued)	The HVAC system will also be designed to automatically trip on a seismic event. HVAC trip is IROFS26. Accident Identifier SEISMIC-2c: Add IROFS26, initiating event index (-2) as described above. As a result of the addition of IROFS26, consequence analysis shows that the consequences have been mitigated to an intermediate category (2). The resulting risk index is (6), therefore, additional IROFS are required. Accident Identifier SEISMIC-2d: Evaluate failure of IROFS26. A failure probability index of (-2) was selected for IROFS26. This corresponds to a single active engineered IROFS per NUREG-1520. A failure duration index of (-1) was selected for the Cascade Halls' portion of IROFS26 corresponding to monthly testing per NUREG-1520. Consequence category is high (3), same as for Accident Identifier SEISMIC-2b. The resulting risk index is (3) which is acceptable risk. Building leakage to outside following HVAC trip is limited by design features. Leakage limiting design features of building is IROFS41. Accident Identifier SEISMIC-2e: Add IROFS41, initiating event index (-2) as described above. As a result of the addition of IROFS41, consequence analysis shows that consequences have been further mitigated to low (1), yielding a risk index of (3). This is acceptable risk. Accident Identifier SEISMIC-2f: Evaluate failure of IROFS41 with success of IROFS26. A failure probability index of (-2) was conservatively selected for IROFS41 which is a single passive engineered IROFS per NUREG-1520. The resulting consequence category is intermediate (2), same as for Accident Identifier SEISMIC-2c. Risk index is (4) which is acceptable.
EE-SEISMIC-3 (Blending & Liquid Sampling)	Excessive seismic motions imposed on non-seismically qualified buildings, beyond normal building code design, and beyond the capacity of UF_6 piping systems could lead to building collapse, breaching of UF_6 systems, and ultimately a UF_6 release. The UF_6 cascades and piping systems do not have an explicit seismic design basis. An initiating event index of (-2) has been conservatively assumed. Information on the annual frequency of earthquakes is provided in Section 3.2.6.3. The peak horizontal ground acceleration at an annual frequency of 1E-02 is approximately 0.01g. The peak horizontal ground acceleration at an annual frequency of 1E-03 is

Accident Identifier (See Table 3.7-3)	Description
EE-SEISMIC-3 (Blending & Liquid Sampling) (continued)	approximately 0.05g. The seismic capacity of the UF_6 piping systems is assumed to be capable of maintaining UF_6 confinement to at least a 0.01g earthquake. Actual seismic capacity of the piping is likely to be higher than 0.01g. Therefore, it is conservative to assign an initiating event index to UF_6 piping failure of (-2). The uncontrolled event is for the Blending & Liquid Sampling Area. The seismic event leads to building failure and impacts on UF_6 process systems leading to UF_6 release. The event is assumed to have high consequences. For the controlled event, buildings are designed to a seismic level with an annual probability of 1.0E-4. Details of the development of the seismic design basis are provided in Section 3.2.6. The seismic design basis selected for the facility is based on a site-specific seismic hazard assessment for the NEF site. The design basis earthquake (DBE) has been selected as the 10,000-yr (1.0E-4 mean annual probability) earthquake. This DBE will be used in the detailed design process to demonstrate compliance with the overall ISA performance requirements. This will be accomplished by confirmatory seismic performance calculations for the seismic IROFS during detailed design. The objective will be to demonstrate that use of this DBE will achieve a likelihood of unacceptable performance of less than approximately 1.0E-5 per year. The difference between the mean annual probabilities for design (1.0E-4) and performance (1.0E-5) is achieved through conservatism in the design (factors of safety), elasticity in the structures, and conservatism in the evaluation of the design. Use of this approach will result in a “highly unlikely” event likelihood for exceeding the seismic capacity of the buildings and an initiating event index of (-5) is appropriate. Since the initiating event index for the UF_6 piping (-2) is more limiting than the seismic design of the buildings (-5), the (-2) is used as the initiating event index for all seismic cases. Accident Identifier SEISMIC-3a: Uncontrolled case; initiating event index (-2) as described above. As discussed above, this is a high consequence category of (3). Risk index becomes (9). Therefore, IROFS required.

Accident Identifier (See Table 3.7-3)	Description
EE-SEISMIC-3 (Blending & Liquid Sampling) (continued)	The building seismic design basis (1.0E-4) and likelihood of unacceptable performance (1.0E-5) is IROFS27. Accident Identifier SEISMIC-3b: Add IROFS 27, initiating event index (-2) as described above. As a result of IROFS27, the consequence analysis shows that the consequences have been mitigated to an intermediate category (2). The risk index is (6), therefore, additional IROFS are required. The HVAC system will also be designed to automatically trip on a seismic event. HVAC trip is IROFS26. Accident Identifier SEISMIC-3c: Add IROFS26, initiating event index (-2) as described above. As a result of the addition of IROFS26, consequence analysis shows that the consequences have been further mitigated but still at an intermediate category (2). The resulting risk index is (6), therefore, additional IROFS are required. Accident Identifier SEISMIC-3d: Evaluate failure of IROFS26. A failure probability index of (-2) was selected for IROFS26. This corresponds to a single active engineered IROFS per NUREG-1520. A failure duration index of (0) was selected for the Blending and Liquid Sampling Areas' portion of IROFS26 corresponding to annual testing per NUREG-1520. Consequence category is intermediate (2), same as for Accident Identifier SEISMIC-3b. The resulting risk index is (4) which is acceptable risk. Building leakage to outside following HVAC trip is limited by design features. Leakage limiting design features is IROFS41. Accident Identifier SEISMIC-3e: Add IROFS41, initiating event index (-2) as described above. As a result of the addition of IROFS41, consequence analysis shows that consequences have been further mitigated to low (1), yielding a risk index of (3). This is acceptable risk. Accident Identifier SEISMIC-3f: Evaluate failure of IROFS41 with success of IROFS26. A failure probability index of (-2) was conservatively selected for IROFS41 which is a single passive engineered IROFS per NUREG-1520. The resulting consequence category is intermediate (2), same as for Accident Identifier SEISMIC-3c. Risk index is (4) which is acceptable.

Accident Identifier (See Table 3.7-3)	Description
EE-SEISMIC-5 (Liquid Sampling Autoclave)	Excessive seismic motions beyond the seismic capacity of the liquid sampling autoclave in the horizontal or tipped position containing liquified UF_6 could lead to liquid sampling autoclave failure and a liquid UF_6 release. For the uncontrolled case, the liquid sampling autoclave is assumed not to have an explicit seismic design basis. An initiating event index of (-2) has been conservatively assumed. Information on the annual frequency of earthquakes is provided in Section 3.2.6.4. The peak horizontal ground acceleration at an annual frequency of 1E-02 is approximately 0.01g. The peak horizontal ground acceleration at an annual frequency of 1E-03 is approximately 0.05g. The seismic capacity of the liquid sampling autoclave is assumed to be capable of maintaining UF_6 confinement to at least a 0.01g earthquake. Actual seismic capacity of the liquid sampling autoclave is likely to be higher than 0.01g. Therefore, it is conservative to assign an initiating event index to the liquid sampling autoclave failure of (-2). The uncontrolled event is a seismic-induced loss of containment for a liquid sampling autoclave containing liquified UF_6. The event is assumed to have high consequences. For the controlled event, the liquid sampling autoclave is seismically designed in both operating positions (i.e., cylinder horizontal and cylinder tipped) to a seismic level with an annual probability of 1.0E-4. Details of the development of the seismic design basis are provided in Section 3.2.6. The seismic design basis selected for the facility, including the liquid sampling autoclave, is based on a site-specific seismic hazard assessment for the NEF site. The design basis earthquake (DBE) has been selected as the 10,000-yr (1.0E-4 mean annual probability) earthquake. This DBE will be used in the detailed design process to demonstrate compliance with the overall ISA performance requirements. This will be accomplished by confirmatory seismic performance calculations for the seismic IROFS during detailed design. The objective will be to demonstrate that use of this DBE will achieve a likelihood of unacceptable performance of less than approximately 1.0E-5 per year. The difference between the mean annual probabilities for design (1.0E-4) and performance (1.0E-5) is achieved through conservatism in the design (factors of safety), elasticity in the components, and conservatism in the evaluation of the design. Use of this approach will result in a “highly unlikely” event

Accident Identifier (See Table 3.7-3)	Description
EE-SEISMIC-5 (Liquid Sampling Autoclave) (continued)	likelihood for exceeding the seismic capacity of the liquid sampling autoclave and an initiating event index of (-5) is appropriate. The liquid sampling autoclave seismic design is IROFS28. Seismic design level considers the duration that the liquid sampling autoclave is in a particular position (horizontal or tipped). For the horizontal position, the seismic design is based on the 1.0E-4 annual probability DBE (0.15g) peak horizontal and vertical acceleration and likelihood of unacceptable performance (1.0E-5). An initiating event index of (-5) is appropriate. Seismic design in the tipped position is adjusted for the short exposure period to maintain “highly unlikely” likelihood. Based on a detailed analysis considering the number of annual liquid sampling evolutions, duration while the liquid sampling autoclave is in the tipped position, and the seismic hazard for the site (see Section 3.2.6.4), a seismic design basis for the liquid sampling autoclave of 0.04g (peak horizontal and vertical acceleration) while in the tipped position is appropriate. This design applies to all positions except for full horizontal. The 0.04g tipped design level was determined based on an initiating event index of (-5).
FF1-1 (Centrifuge Test Facility)	The frequency index number for the initiating event was determined to be (-2). The NUREG-1520 criteria – no failures of this type in this facility in 30 yrs – applies. This failure frequency index was based on evidence from similarly designed Urenco European plants which have a combined plant history of greater than 30 yrs in which no fire events have occurred in any uranium areas. The uranium inventory in the area is 50 kg (110 lb)of UF_6 contained in sealed stainless steel components and piping. The uncontrolled event is fire propagating into this area from other areas within the Centrifuge Assembly Building that could result in a release of the UF_6 inventory. This event was assumed to have a high consequence.

Accident Identifier (See Table 3.7-3)	Description
FF1-1 (Centrifuge Test Facility) (continued)	For the controlled event, fire would not propagate into the area due to the fire barriers surrounding the Centrifuge Test Facility. Fire barriers are IROFS35. The failure probability index for fire barriers was determined to be (-3). The NUREG-1520 criteria – a single passive engineered IROFS - applies.
FF1-2 (Centrifuge Test Facility)	The frequency index number for the initiating event was determined to be (-2). The NUREG-1520 criteria – no failures of this type in this facility in 30 yrs – applies. (See FF1-1 for justification.) The uranium inventory in the area is 50 kg (110 lb) which is contained in sealed stainless steel components and piping. The uncontrolled event is a fire involving excessive transient combustibles within the room that could result in a release of the UF_6 inventory. This event was assumed to have a high consequence. For the controlled event, a fire considering expected in-situ and transient combustibles would be a low consequence event. The UF_6 inventory was discounted as not being released during a fire due to insufficient combustibles being present to cause failure of sealed stainless steel components used in the test assembly and test piping. Administrative controls that limit transient combustibles in plant areas are part of IROFS36. The failure probability index for administrative controls/procedures of the Fire Safety program was determined to be (-3). The NUREG-1520 criteria – an enhanced administrative IROFS - applies.
FF5-1 (CRDB Loading Dock)	The frequency index number for the initiating event was determined to be (-2). The NUREG-1520 criteria – no failures of this type in this facility in 30 yrs – applies. (See FF1-1 for justification.) The uranium inventory is UF_6 contained in 48Y, 48X, and/or 30B cylinders located on the loading dock and scales adjacent to the CRDB Truck Unloading Bay and Dock.

Accident Identifier (See Table 3.7-3)	Description
FF5-1 (CRDB Loading Dock) (continued)	The uncontrolled event is a fire involving excessive transient combustibles in the adjacent truck bay that could result in a release of the UF_6 inventory. This event was assumed to have a high consequence. For the controlled event, a fire considering expected in-situ and transient combustibles would be a low consequence event. The UF_6 inventory was discounted as not being released during a fire due to insufficient combustibles being present to cause failure of the cylinders. In order to prevent exposure to a potential service vehicle fire in the drive through bay, a one (1) meter setback for the cylinders was evaluated and shown to be adequate for an adjacent fire. Administrative controls that limit severe fire exposure to cylinders are part of IROFS36. The failure probability index for administrative controls/procedures of the Fire Safety program was determined to be (-3). The NUREG-1520 criteria – an enhanced administrative IROFS - applies.
FF6-1 (CRDB General Areas)	The frequency index number for the initiating event was determined to be (-2). The NUREG-1520 criteria – no failures of this type in this facility in 30 yrs – applies. (See FF1-1 for justification.) The uranium inventory is up to 9.43E6 kg (2.08E lb) and consists of UF_6 contained in 48Y, 48X, and 30B cylinders located in storage or transit into and out of the area via overhead crane or on a cylinder transporter (to and from the UF_6 Handling Area). The uncontrolled event is fire propagating into this area from other areas that could result in a release of the UF_6 inventory. This event was assumed to have a high consequence. For the controlled event, fire would not propagate into the area due to the fire barriers surrounding the CRDB. Fire barriers are IROFS35. The failure probability index for fire barriers was determined to be (-3). The NUREG-1520 criteria – a single passive engineered IROFS - applies.

Accident Identifier (See Table 3.7-3)	Description
FF6-2 (CRDB General Areas)	The frequency index number for the initiating event was determined to be (-2). The NUREG-1520 criteria – no failures of this type in this facility in 30 yrs – applies. (See FF1-1 for justification.) The uranium inventory is up to 9.43E6 (2.08E7 lb) and consists of UF_6 contained in 48Y, 48X, and 30B cylinders located in storage or transit into and out of the area via overhead crane or on a cylinder transporter (to and from the UF_6 Handling Area). The uncontrolled event is a fire involving excessive transient combustibles within the CRDB that could result in a release of the UF_6 inventory. This event was assumed to have a high consequence. For the controlled event, a fire considering expected in-situ and transient combustibles would be a low consequence event. The UF_6 inventory was discounted as not being released during a fire due to insufficient combustibles being present to cause failure of a cylinder. Administrative controls that limit transient combustibles in plant areas are part of IROFS36. The failure probability index for administrative controls/procedures of the Fire Safety program was determined to be (-3). The NUREG-1520 criteria – an enhanced administrative IROFS - applies.
FF7-1 (CRDB Transporter)	The frequency index number for the initiating event was determined to be (-2). The NUREG-1520 criteria – no failures of this type in this facility in 30 yrs – applies. (See FF1-1 for justification.) The uranium inventory would be one UF_6 cylinder (a 48X, 48Y, or a 30B) in transit. The uncontrolled event is a fire involving excessive combustibles on the transporter that could result in a release of the UF_6 inventory. This event was assumed to have a high consequence. For the controlled event, a fire considering expected in-situ and transient combustibles would be a low consequence event. The UF_6 inventory was discounted as not being released during a fire due to insufficient combustibles being present to cause failure of a cylinder. The transporter design will be limited to be either electric drive or diesel drive with a fuel capacity of less than 280 L (74 gallons).

Accident Identifier (See Table 3.7-3)	Description
FF7-1 (CRDB Transporter) (continued)	Administrative controls that limit severe fire exposure to cylinders are part of IROFS36. The failure probability index for administrative controls/procedures of the Fire Safety program was determined to be (-3). The NUREG-1520 criteria – an enhanced administrative IROFS - applies.
FF8-1 (Cascade Hall Inside Assay Thermal Enclosure - typical for 6 halls)	The frequency index number for the initiating event was determined to be (-2). The NUREG-1520 criteria – no failures of this type in this facility in 30 yrs – applies. (See FF1-1 for justification.) The uranium inventory consists of UF_6 in piping and centrifuges. The inventory in an assay (8 cascades) is 128 kg (282 lb). The uncontrolled event is fire propagating into this area from other areas that could result in a release of the UF_6 inventory. This event was assumed to have a high consequence. For the controlled event, fire would not propagate into the area due to the fire barriers surrounding the assay. Fire barriers are IROFS35. The failure probability index for fire barriers was determined to be (-3). The NUREG-1520 criteria – a single passive engineered IROFS - applies.
FF8-2 (Cascade Hall Inside Assay Thermal Enclosure - typical for 6 halls)	The frequency index number for the initiating event was determined to be (-2). The NUREG-1520 criteria – no failures of this type in this facility in 30 yrs – applies. (See FF1-1 for justification.) The inventory consists of UF_6 in piping and centrifuges. The inventory in an assay (8 cascades) is 128 kg (282 lb). The uncontrolled event is a fire involving excessive transient combustibles within the Cascade Hall inside the assay enclosure that could result in a release of the UF_6 inventory. This event was assumed to have a high consequence. For the controlled event, a fire considering expected in-situ and transient combustibles would be a low

Accident Identifier (See Table 3.7-3)	Description
FF8-2 (Cascade Hall Inside Assay Thermal Enclosure - typical for 6 halls) (continued)	consequence event. The fire presumes that ignition occurs in cabling feeding the centrifuge drive motors. It was conservatively presumed that this fire could result in the release of 1.3 kg (2.87 lb) of UF_6. Administrative controls that limit fire exposure to the cascades and limit transient combustibles in plant areas are part of IROFS36. The failure probability index for administrative controls/procedures of the Fire Safety program was determined to be (-3). The NUREG-1520 criteria – an enhanced administrative IROFS - applies.
FF11-1 (Process Services Area)	The frequency index number for the initiating event was determined to be (-2). The NUREG-1520 criteria – no failures of this type in this facility in 30 yrs – applies. (See FF1-1 for justification.) The uranium inventory is 13.8 kg (30.4 lb) which consists of UF_6 in feed, product, and tails piping manifolds. Additionally, there is a possibility of uranic material being present in the sodium fluoride traps which are part of the contingency dump system. Assuming this system has been charged to capacity, there could be up to 2400 kg (5290 lb) (16 cascades with three traps per cascade – 50 kg/trap (110 lb/trap)). The uncontrolled event is fire propagating into this area from other areas that could result in a release of the uranium inventory. This event was assumed to have a high consequence. For the controlled event, fire would not propagate into the area due to the fire barriers around the Process Services Area. Fire barriers are IROFS35. The failure probability index for fire barriers was determined to be (-3). The NUREG-1520 criteria – a single passive engineered IROFS (PEC) - applies.
FF11-2 (Process Services Area)	The frequency index number for the initiating event was determined to be (-2). The NUREG-1520 criteria – no failures of this type in this facility in 30 yrs – applies. (See FF1-1 for justification.) The uranium inventory is 13.8 kg (30.4 lb) which consists of UF_6 in feed, product, and tails piping manifolds. Additionally, there is a possibility of uranic material being present in the sodium fluoride

Accident Identifier (See Table 3.7-3)	Description
FF11-2 (Process Services Area) (continued)	traps which are part of the contingency dump system. Assuming this system has been charged to capacity, there could be up to 2400 kg (5290 lb) (16 cascades with three traps per cascade – 50 kg/trap (110 lb/trap)). The uncontrolled event is a fire involving excessive transient combustibles within the area that could result in a release of the uranium inventory. This event was assumed to have a high consequence. For the controlled event, a fire considering expected in-situ and transient combustibles would be a low consequence event. It is assumed that fire could cause failures in the aluminum piping manifolds and that 50% of the inventory of the manifolds (6.88 kg) (15.2 lb) would be released even though this piping is at subatmospheric pressure. Continuing release from these manifolds was not considered since the cascade centrifuges and connected cylinders are at lower elevations and gravity pouring would be necessary for additional UF_6 to escape. The remaining uranic material inventory that could potentially be present was discounted as not being released during this fire due to insufficient combustibles being present to cause failure of the sealed aluminum chemical traps. Administrative controls that limit transient combustibles in plant areas are part of IROFS36. The failure probability index for administrative controls/procedures of the Fire Safety program was determined to be (-3). The NUREG-1520 criteria – an enhanced administrative IROFS - applies.
FF15-1 (UF_6 Handling Area - typical for 3 modules/ Blending and Liquid Sampling Area)	The frequency index number for the initiating event was determined to be (-2). The NUREG-1520 criteria – no failures of this type in this facility in 30 yrs – applies. (See FF1-1 for justification.) The uranium inventory is up to 4.00E5 kg (8.82E5 lb) in the UF_6 Handling Area and 1.46E5 kg (3.22E5 lb) in the Blending and Liquid Sampling Area and consists of UF_6 contained in cylinders, piping, manifolds, and hoses. Additional uranic material/HF inventory could be present on the carbon/alumina traps that capture UF_6 from the various feed, product, and tails system cold traps. The uncontrolled event is fire propagating into this area from other areas that could result in a release of the uranium inventory. This event was assumed to have a high consequence.

Accident Identifier (See Table 3.7-3)	Description
FF15-1 (UF_6 Handling Area - typical for 3 modules/ Blending and Liquid Sampling Area) (continued)	For the controlled event, fire would not propagate into the area due to the fire barriers around the area. Fire barriers are IROFS35. The failure probability index for fire barriers was determined to be (-3). The NUREG-1520 criteria – a single passive engineered IROFS - applies.
FF16-1 (UF_6 Handling Area - typical for 3 modules/ Blending and Liquid Sampling Area)	The frequency index number for the initiating event was determined to be (-2). The NUREG-1520 criteria – no failures of this type in this facility in 30 yrs – applies. (See FF1-1 for justification.) The uranium inventory is up to 4.00E5 kg (8.82E5 lb) in the UF_6 Handling Area and 1.46E5 kg (3.22E5 lb) in the Blending and Liquid Sampling Area and consists of UF_6 contained in cylinders, piping, manifolds, and hoses. Additional uranic material/HF inventory could be present on the carbon/alumina traps that capture residual traces of UF_6 from the various feed, product, and tails system cold traps. The uncontrolled event is a fire involving excessive transient combustibles within the area could result in a release of the uranium inventory. This event was assumed to have a high consequence. For the controlled event, a fire considering expected in-situ and transient combustibles would be a low consequence event. It is assumed that a fire in improperly placed transient combustibles could cause failure of a single cylinder hose. This could result in a pouring feed cylinder release (feed selected as bounding – highest pressure). The remaining uranic material/HF inventory was discounted as not being released during this fire due to insufficient combustibles being present to cause failures of adjacent hoses, cylinders, piping, manifolds, or stainless steel chemical traps. Administrative controls that limit transient combustibles in plant areas are part of IROFS36. The failure probability index for administrative controls/procedures of the Fire Safety program was determined to be (-3). The NUREG-1520 criteria – an enhanced administrative IROFS - applies.

Accident Identifier (See Table 3.7-3)	Description
FF16-2 (UF_6 Handling Area – typical for 3 modules/ Blending and Liquid Sampling Area)	The frequency index number for the initiating event was determined to be (-2). The NUREG-1520 criteria – no failures of this type in this facility in 30 yrs – applies. (See FF1-1 for justification.) The uranium inventory is up to 4.00E5 kg (8.82E5 lb) in the UF_6 Handling Area and 1.46E5 kg (3.22E5 lb) in the Blending and Liquid Sampling Area and consists of UF_6 contained in cylinders, piping, manifolds, and hoses. Additional uranic material/HF inventory could be present on the carbon/alumina traps that capture residual traces of UF_6 from the various feed, product, and tails system cold traps. The uncontrolled event is a fire involving excessive transient combustibles within the area could result in a release of the uranium inventory. This event was assumed to have a high consequence. For the controlled event, a fire considering expected in-situ and transient combustibles would be a low consequence event. It is assumed that fire could cause failures in the aluminum piping manifold and that 50% of the inventory feeding one assay (3.44 kg) (7.6 lb) would be released even though this piping is at subatmospheric pressure. Continuing release from these manifolds was not considered since connected cylinders are at lower elevations and gravity pouring would be necessary for additional UF_6 to escape. The remaining uranic material/HF was discounted as not being released during this fire due to insufficient combustibles being present to cause failure of the cylinders or stainless steel chemical traps. Administrative controls that limit transient combustibles in plant areas are part of IROFS36. The failure probability index for administrative controls/procedures of the Fire Safety program was determined to be (-3). The NUREG-1520 criteria – an enhanced administrative IROFS - applies.
FF21-1 (TSB Solid Waste Collection Room)	The frequency index number for the initiating event was determined to be (-2). The NUREG-1520 criteria – no failures of this type in this facility in 30 yrs – applies. (See FF1-1 for justification.) The uranium inventory is up to 500 kg (1100 lb) of uranic material contained in 12 L (3.2 gal) metal containers and 210 L (55 gal) metal drums.

Accident Identifier (See Table 3.7-3)	Description
FF21-1 (TSB Solid Waste Collection Room) (continued)	The uncontrolled event is fire propagating into this area from other areas that could result in a release of the uranium inventory. This event was assumed to have a high consequence. For the controlled event, fire would not propagate into the area due to the fire barriers around the room. Fire barriers are IROFS35. The failure probability index for fire barriers was determined to be (-3). The NUREG-1520 criteria – a single passive engineered IROFS - applies.
FF21-2 (TSB Solid Waste Collection Room)	The frequency index number for the initiating event was determined to be (-2). The NUREG-1520 criteria – no failures of this type in this facility in 30 years – applies. (See FF1-1 for justification.) The uranium inventory is up to 500 kg (1100 lb) of uranic material contained in 12 L (3.2 gal) metal containers and 210 L (55 gal) metal drums. The uncontrolled event is a fire involving excessive transient combustibles within the room that could result in a release of the uranium inventory. This event was assumed to have a high consequence. For the controlled event, a fire considering expected in-situ and transient combustibles would be a low consequence event. The fire presumes that up to 4 kg (8.8 lb) worth of uranic material (no HF) could be present in open 12 L (3.2 gal) containers or drums during transfer/packing operations and driven off in the event of a fire even though this material is typically bound on other material. The remaining uranic material inventory in the sealed metal drums and waste containers was discounted as not being released during this fire due to insufficient combustibles being present to cause failure of the metal containers. Administrative controls that limit transient combustibles in plant areas and specify the use of metal waste containers are part of IROFS36. The failure probability index for administrative controls/procedures of the Fire Safety program was determined to be (-3). The NUREG-1520 criteria – an enhanced administrative IROFS - applies.

Accident Identifier (See Table 3.7-3)	Description
FF23-1 (TSB Decontamination Workshop)	The frequency index number for the initiating event was determined to be (-2). The NUREG-1520 criteria – no failures of this type in this facility in 30 yrs – applies. (See FF1-1 for justification.) The uranium inventory is up to 48 kg (106 lb) contained in up to three 12 L (3.2 gal) metal containers and three steel tanks. The uncontrolled event is fire propagating into this area from other areas that could result in a release of the uranium inventory. This event was assumed to have a high consequence. For the controlled event, fire would not propagate into the area due to the fire barriers around the room. Fire barriers are IROFS35. The failure probability index for fire barriers was determined to be (-3). The NUREG-1520 criteria - a single passive engineered IROFS - applies.
FF23-2 (TSB Decontamination Workshop)	The frequency index number for the initiating event was determined to be (-2). The NUREG-1520 criteria – no failures of this type in this facility in 30 yrs – applies. (See FF1-1 for justification.) The uranium inventory is up to 48 kg (106 lb) contained in up to three 12 L (3.2 gal) metal containers and three steel tanks. The uncontrolled event is a fire involving excessive transient combustibles within the room that could result in a release of the uranium inventory. This event was assumed to have a high consequence. For the controlled event, a fire considering expected in-situ and transient combustibles would be a low consequence event. The fire presumes that up to 4 kg (8.8 lb) worth of uranic material (no HF) could be present in open 12 L (3.2 gal) containers during transfer/charging operations and driven off in the event of a fire. The remaining uranic material inventory is in closed metal tanks, sealed metal containers, and/or is suspended in liquid and was discounted as not being released during this fire due to insufficient combustibles being present to cause failures/release. Administrative controls that limit

Accident Identifier (See Table 3.7-3)	Description
FF23-2 (TSB Decontamination Workshop) (continued)	transient combustibles in plant areas and specify the use of metal waste containers are part of IROFS36. The failure probability index for administrative controls/procedures of the Fire Safety program was determined to be (-3). The NUREG-1520 criteria – an enhanced administrative IROFS - applies.
FF24-1 (TSB Ventilated Room)	The frequency index number for the initiating event was determined to be (-2). The NUREG-1520 criteria – no failures of this type in this facility in 30 yrs – applies. (See FF1-1 for justification.) The uranium inventory is up to 500 kg (1100 lb) contained in 12 L (3.2 gal) metal containers and 210 L (55 gal) drums. Additional uranium inventory is present (periodically) in the form of a single 48Y, 48X, or 30B cylinder present in the room for valve maintenance/change-out. The uncontrolled event is fire propagating into this area from other areas that could result in a release of the uranium inventory. This event was assumed to have a high consequence. For the controlled event, fire would not propagate into the area due to the fire barriers around the room. Fire barriers are IROFS35. The failure probability index for fire barriers was determined to be (-3). The NUREG-1520 criteria – a single passive engineered IROFS - applies.
FF25-1 (TSB Ventilated Room)	The frequency index number for the initiating event was determined to be (-2). The NUREG-1520 criteria – no failures of this type in this facility in 30 yrs – applies. (See FF1-1 for justification.) TSB Ventilated Room – The uranium inventory is up to 500 kg (1100 lb) contained in 12 L (3.2 gal) metal containers and 210 L (55 gal) drums. Additional uranium inventory is present (periodically) in the form of a single 48Y, 48X, or 30B cylinder present in the room for valve maintenance/change-out. The uncontrolled event is a fire involving excessive transient combustibles within the area that could result in a release of the uranium inventory. This event was assumed to have a high consequence.

Accident Identifier (See Table 3.7-3)	Description
FF25-1 (TSB Ventilated Room) (continued)	For the controlled event, a fire considering expected in-situ and transient combustibles would be a low consequence event. It is assumed that a fire in improperly placed transient combustibles could cause failure of the nitrogen hose or vent line piping used to bleed gas from cylinders during valve servicing and/or subsequent nitrogen pressure test. The resulting release would be bounded by a feed or tails cylinder (48Y has the largest inventory) which results in a puff release at the 1.4 bar (20.3 psia) valve test pressure with a subsequent pouring cylinder release at room temperature. The remaining uranic material/HF inventory in the cylinder, sealed metal drums, chemical traps, and waste containers was discounted as not being released during this fire due to insufficient combustibles being present to cause failure of the cylinder or metal containers. Administrative controls that limit transient combustibles in plant areas and specify the use of metal waste containers are part of IROFS36. The failure probability index for administrative controls/procedures of the Fire Safety program was determined to be (-3). The NUREG-1520 criteria – an enhanced administrative IROFS - applies.
FF25-2 (TSB Ventilated Room)	The frequency index number for the initiating event was determined to be (-2). The NUREG-1520 criteria – no failures of this type in this facility in 30 yrs – applies. (See FF1-1 for justification.) The uranium inventory is up to 500 kg (1100 lb) contained in 12 L (3.2 gal) metal containers and 210 L (55 gal) drums. Additional uranium inventory is present (periodically) in the form of a single 48Y, 48X, or 30B cylinder present in the room for valve maintenance/change-out. The uncontrolled event is a fire involving excessive transient combustibles within the area that could result in a release of the uranium inventory. This event was assumed to have a high consequence. For the controlled event, a fire considering expected in-situ and transient combustibles would be an intermediate consequence event. The fire presumes that up to 50 kg (110 lb) of uranic material/HF could be present in open 12 L (3.2 gal) containers and the bulking drum during transfer/bulking operations and driven off in the event of a fire. In order to mitigate the severity to low consequence, the IROFS required is smoke detection (area-wide in the room or in the ventilation system) interlocked

Accident Identifier (See Table 3.7-3)	Description
FF25-2 (TSB Ventilated Room) (continued)	to isolate the room ventilation systems with limited leakage from the building (IROFS37). The remaining uranic material/HF inventory in the cylinder, sealed metal drums, chemical traps, and waste containers was discounted as not being released during this fire due to insufficient combustibles being present to cause failure of the cylinder or metal containers. Administrative controls that limit transient combustibles in plant areas and specify the use of metal waste containers are part of IROFS36. Accident Identifier FF25-2a: The uncontrolled case is initiating event index (-2) with a consequence category (3). Risk index is (9) and IROFS are needed. Accident Identifier FF25-2b: Apply IROFS 36, the controlled case consequences analysis shows that the resulting consequence is intermediate category (2). Risk index is (6) and additional IROFS are needed. Accident Identifier FF25-2c: Apply IROFS 36 and apply IROFS 37, this is a controlled event with a mitigation to reduce the severity of the consequence (smoke detection trip of the room ventilation with limited leakage) with a failure probability of (-2). The resulting risk index is (3) which is acceptable risk. Accident Identifier FF25-2d: Apply IROFS 36 and evaluate failure of IROFS 37, this is a controlled event without mitigation to reduce the severity of the consequence. The resulting likelihood index is (–4) which is combined with the intermediate consequence (the controlled case consequences analysis shows that the resulting consequence is intermediate) and results in a risk index of (4) which is acceptable risk. Accident Identifier FF25-2e: Evaluate failure of IROFS 36 and apply IROFS 37, this is an evaluation of the event with mitigation. The initiating event is –2 with a failure probability index of –3. The event is assumed to have high consequences (category 3). This results in a risk index of (3) which is acceptable risk.

Accident Identifier (See Table 3.7-3)	Description
FF25-2 (TSB Ventilated Room) (continued)	Accident Identifier FF25-2f: Evaluate failure of both IROFS 36 and IROFS 37, this is an evaluation of the event with a failure of mitigation. The initiating event is –2 with a failure probability index of –3 combined with a failure probability of –2. The event is assumed to have high consequences (category 3). This results in a risk index of (3) which is acceptable risk. The failure probability index for smoke detection trip of the room ventilation and limited building leakage was determined to be (-2). The NUREG-1520 criteria – a single active engineered IROFS - applies. The failure probability index for administrative controls/procedures of the Fire Safety program was determined to be (-3). The NUREG-1520 criteria – an enhanced administrative IROFS - applies.
FF38-1 (TSB Chemical Lab Sample Storage Room)	The frequency index number for the initiating event was determined to be (-2). The NUREG-1520 criteria – no failures of this type in this facility in 30 yrs – applies. (See FF1-1 for justification.) The uranium inventory is up to 250 kg (550 lb) of UF_6. The uncontrolled event is fire propagating into this area from other areas that could result in a release of the UF_6 inventory. This event was assumed to have a high consequence. For the controlled event, fire would not propagate into the area due to the fire barriers around the room. Fire barriers are IROFS35. The failure probability index for fire barriers was determined to be (-3). The NUREG-1520 criteria – a single passive engineered IROFS - applies.

Accident Identifier (See Table 3.7-3)	Description
FF38-2 (TSB Chemical Lab Sample Storage Room)	The frequency index number for the initiating event was determined to be (-2). The NUREG-1520 criteria – no failures of this type in this facility in 30 yrs – applies. (See FF1-1 for justification.) The uranium inventory is up to 250 kg (550 lb) of UF_6 (up to 0.5 kg (1.1 lb) in 500 1S sample cylinders) The uncontrolled event is a fire involving excessive transient combustibles within the room that could result in a release of the UF_6 inventory. This event was assumed to have a high consequence. For the controlled event, a fire considering expected in-situ and transient combustibles would be a low consequence event. The UF_6 inventory was discounted as not being released during a fire due to insufficient combustibles being present to cause failure of a sample cylinder. Administrative controls that limit this room to no combustibles are part of IROFS36. The failure probability index for administrative controls/procedures of the Fire Safety program was determined to be (-3). The NUREG-1520 criteria – an enhanced administrative IROFS - applies.
FF42-1 (UBC Storage Pad Transporter)	The frequency index number for the initiating event was determined to be (-2). The NUREG-1520 criteria – no failures of this type in this facility in 30 yrs – applies. (See FF1-1 for justification.) The uranium inventory would be one UF_6 cylinder (a 48Y) in transit. The uncontrolled event is a fire involving excessive combustibles on the transporter that could result in a release of the UF_6 inventory. This event was assumed to have a high consequence. For the controlled event, a fire considering expected in-situ and transient combustibles would be a low consequence event. The UF_6 inventory was discounted as not being released during a fire due to insufficient combustibles being present to cause failure of a cylinder. The transporter design will be limited to be either electric drive or diesel drive with a fuel capacity of less than 280 L (74 gallons). Administrative controls that limit severe fire exposure to cylinders are part of IROFS36. The failure probability index for administrative controls/procedures of the Fire Safety program was determined to be (-3). The NUREG-1520 criteria – an enhanced administrative IROFS - applies.

Accident Identifier (See Table 3.7-3)	Description
FF43-1 (Uranium Byproduct Cylinders (UBC) Storage Pad)	The frequency index number for the initiating event was determined to be (-2). The NUREG-1520 criteria – no failures of this type in this facility in 30 yrs – applies. (See FF1-1 for justification.) The uranium inventory is up to 1.97E8 kg of UF_6 contained in 48Y cylinders located on the UBC Storage Pad. The uncontrolled event is a fire involving excessive transient combustibles on the UBC Storage Pad. This event was assumed to have a high consequence. For the controlled event, a fire considering expected in-situ and transient combustibles would be a low consequence event. The UF_6 inventory was discounted as not being released during a fire due to insufficient combustibles being present to cause failure of the cylinders. In order to prevent exposure to pooled flammable fuel fire on the pad, vehicles to be driven onto the storage pad itself will be limited in fuel capacity to less than 280 L (74 gal) of flammable or combustible fuel. Administrative controls that limit severe fire exposure to cylinders are part of IROFS36. The failure probability index for administrative controls/procedures of the Fire Safety program was determined to be (-3). The NUREG-1520 criteria – an enhanced administrative IROFS - applies.
FF43-2 (UBC Storage Pad)	The frequency index number for the initiating event was determined to be (-2). The NUREG-1520 criteria – no failures of this type in this facility in 30 yrs – applies. (See FF1-1 for justification.) The uranium inventory is up to 1.97E8 kg (4.34E8 lb) of UF_6 contained in 48Y cylinders located on the UBC Storage Pad. The uncontrolled event is a fire involving excessive transient combustibles adjacent to the UBC Storage Pad. This event was assumed to have a high consequence. For the controlled event, a fire considering expected in-situ and transient combustibles would be a low consequence event. The UF_6 inventory was discounted as not being released during a fire due to

Accident Identifier (See Table 3.7-3)	Description
FF43-2 (UBC Storage Pad) (continued)	insufficient combustibles being present to cause failure of the cylinders. A typical service vehicle fire on the UBC Storage Pad perimeter road was evaluated and shown to not result in failure of the UBC cylinders. Administrative controls that limit severe fire exposure to cylinders are part of IROFS36. The failure probability index for administrative controls/procedures of the Fire Safety program was determined to be (-3). The NUREG-1520 criteria – an enhanced administrative IROFS - applies.
FF44-1 (UBC Storage Pad)	The frequency index number for the initiating event was determined to be (-2). The NUREG-1520 criteria – no failures of this type in this facility in 30 yrs – applies. (See FF1-1 for justification.) The uranium inventory is up to 1.97E8 kg (4.34E8 lb) of UF_6 contained in 48Y cylinders located on the UBC Storage Pad. The uncontrolled event is a wildland fire spreading onto the property and exposing the UBC Storage Pad. This event was assumed to have a high consequence. For the controlled event, a fire would be a low consequence event. Off property vegetation is of a low density and the fenceline is over 100 m (328 ft) away. An off-property wildland fire will not cause failure of cylinders. Administrative controls that limit severe fire exposure to cylinders are part of IROFS36. The failure probability index for administrative controls/procedures of the Fire Safety program was determined to be (-3). The NUREG-1520 criteria – an enhanced administrative IROFS - applies.

(This page intentionally left blank)

FIGURES

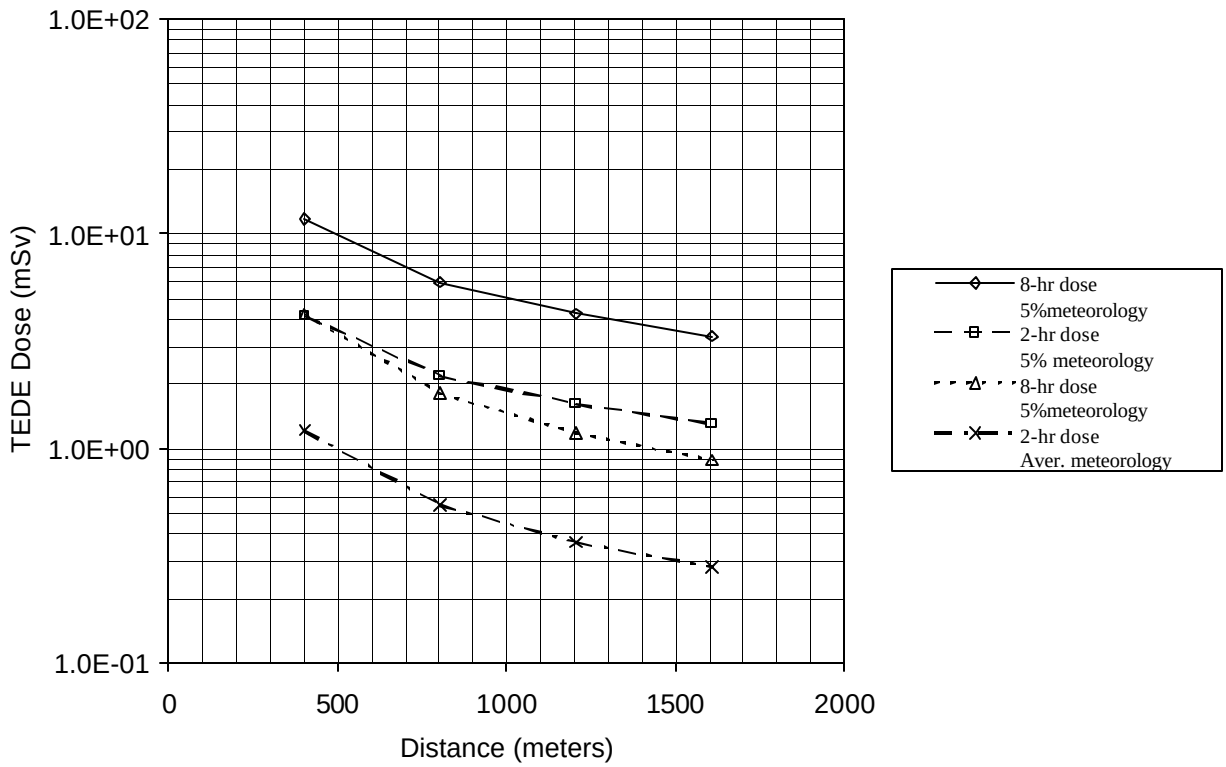

(Prompt Radiation + Released Cloud; 5% and Average Meteorology)

FIGURE 3.7-1

TEDE DOSES FROM POSTULATED CRITICALITY ACCIDENT

REFERENCE NUMBER
Figures 3.7.doc

REVISION DATE: DECEMBER 2003

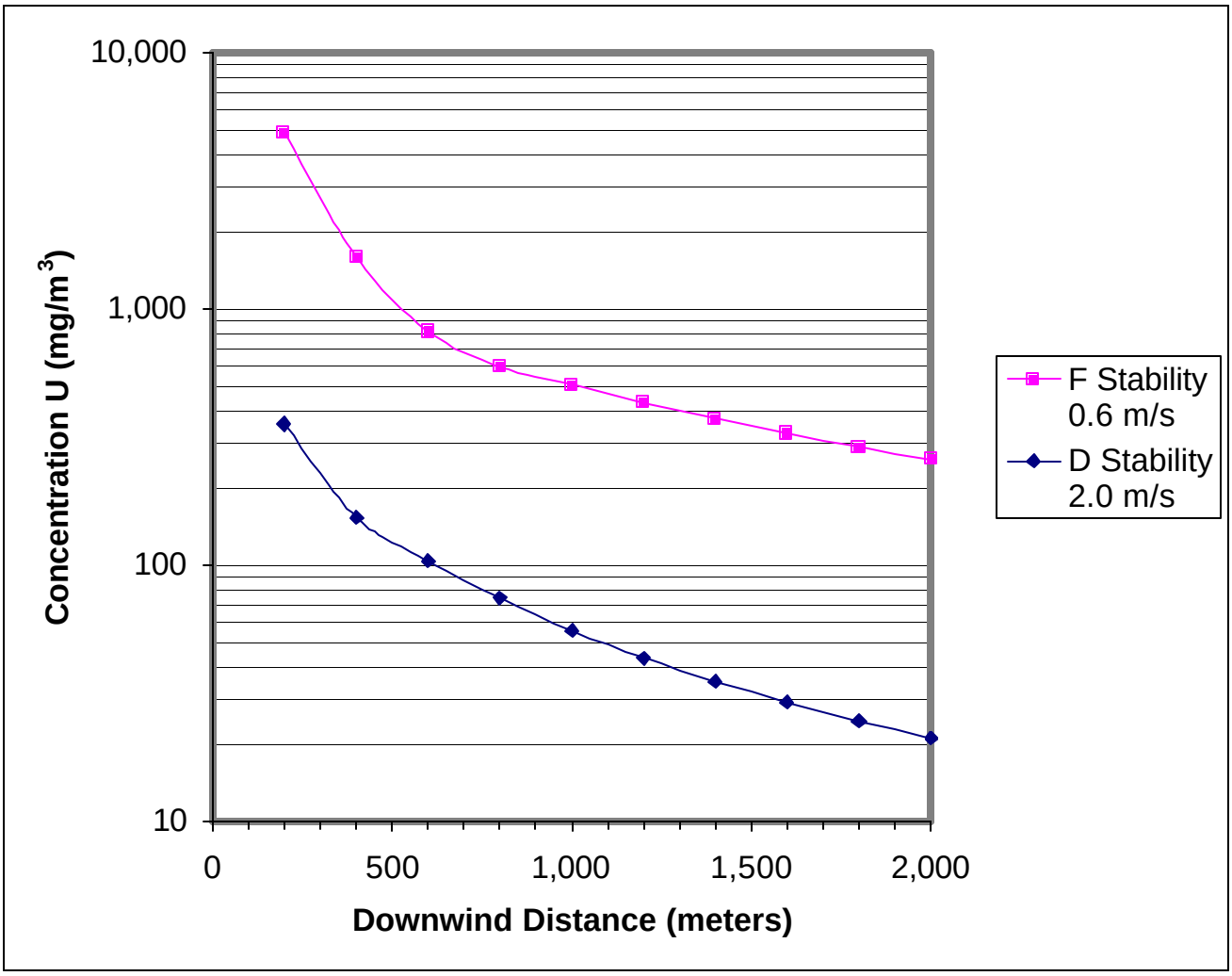

REFERENCE NUMBER
Figures 3.7.doc

FIGURE 3.7-2

AIRBORNE URANIUM CONCENTRATIONS DUE TO A HEATER RUNAWAY RELEASE

REVISION DATE: DECEMBER 2003

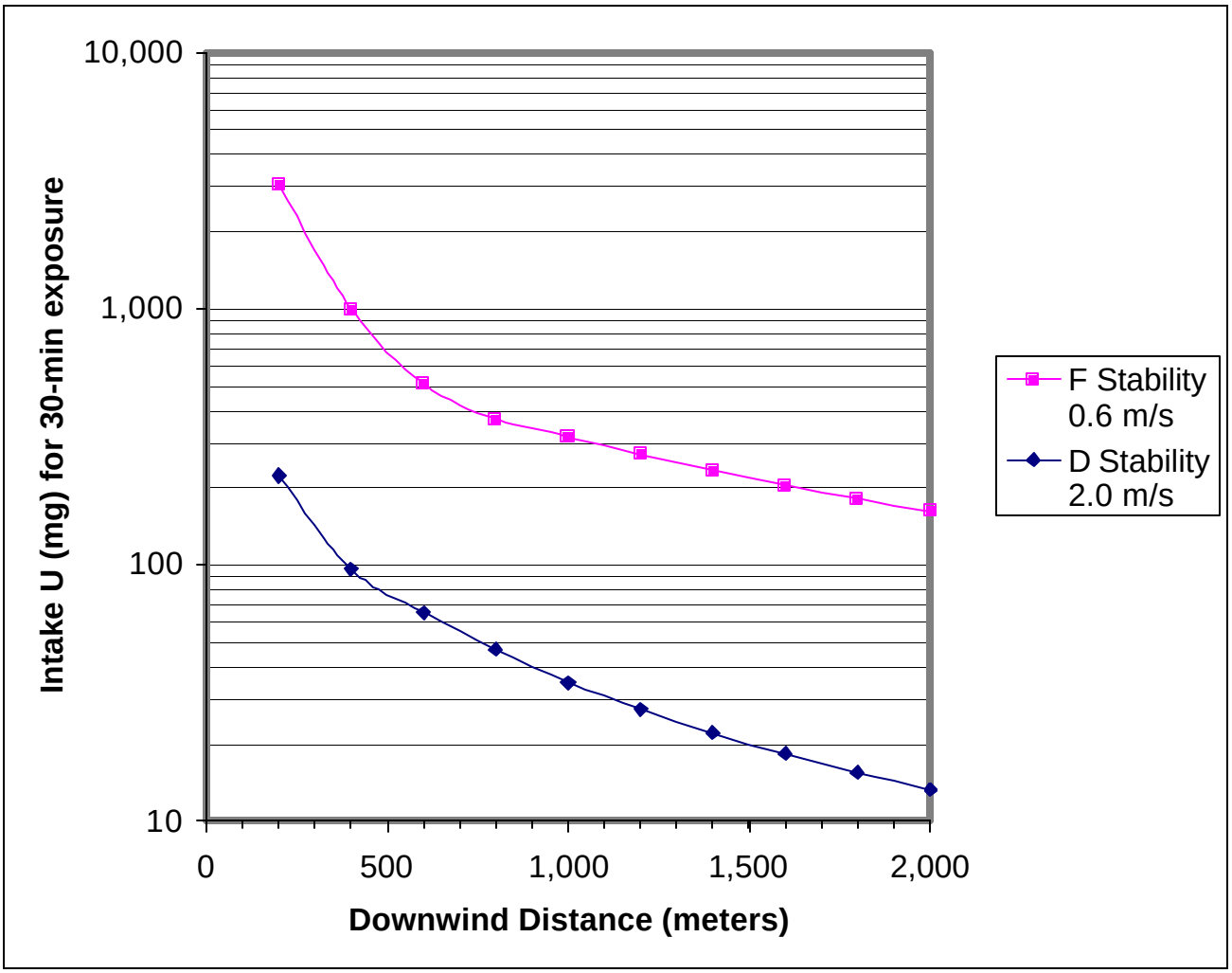

REFERENCE NUMBER
Figures 3.7.doc

FIGURE 3.7-3

AIRBORNE URANIUM INTAKE DUE TO A HEATER RUNAWAY RELEASE

REVISION DATE: DECEMBER 2003

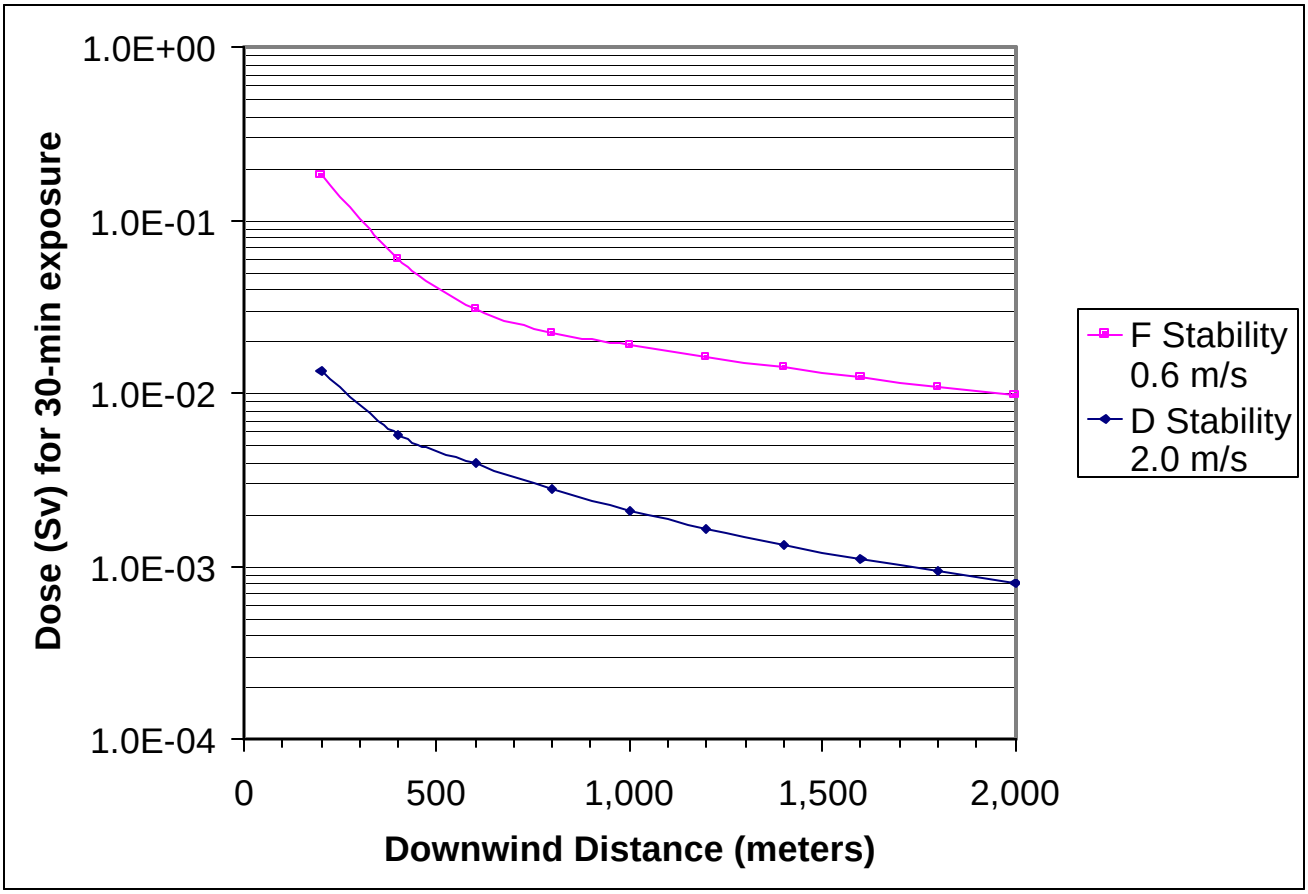

REFERENCE NUMBER
Figures 3.7.doc

FIGURE 3.7-4

TEDE DOSES DUE TO A HEATER RUNAWAY RELEASE

REVISION DATE: DECEMBER 2003

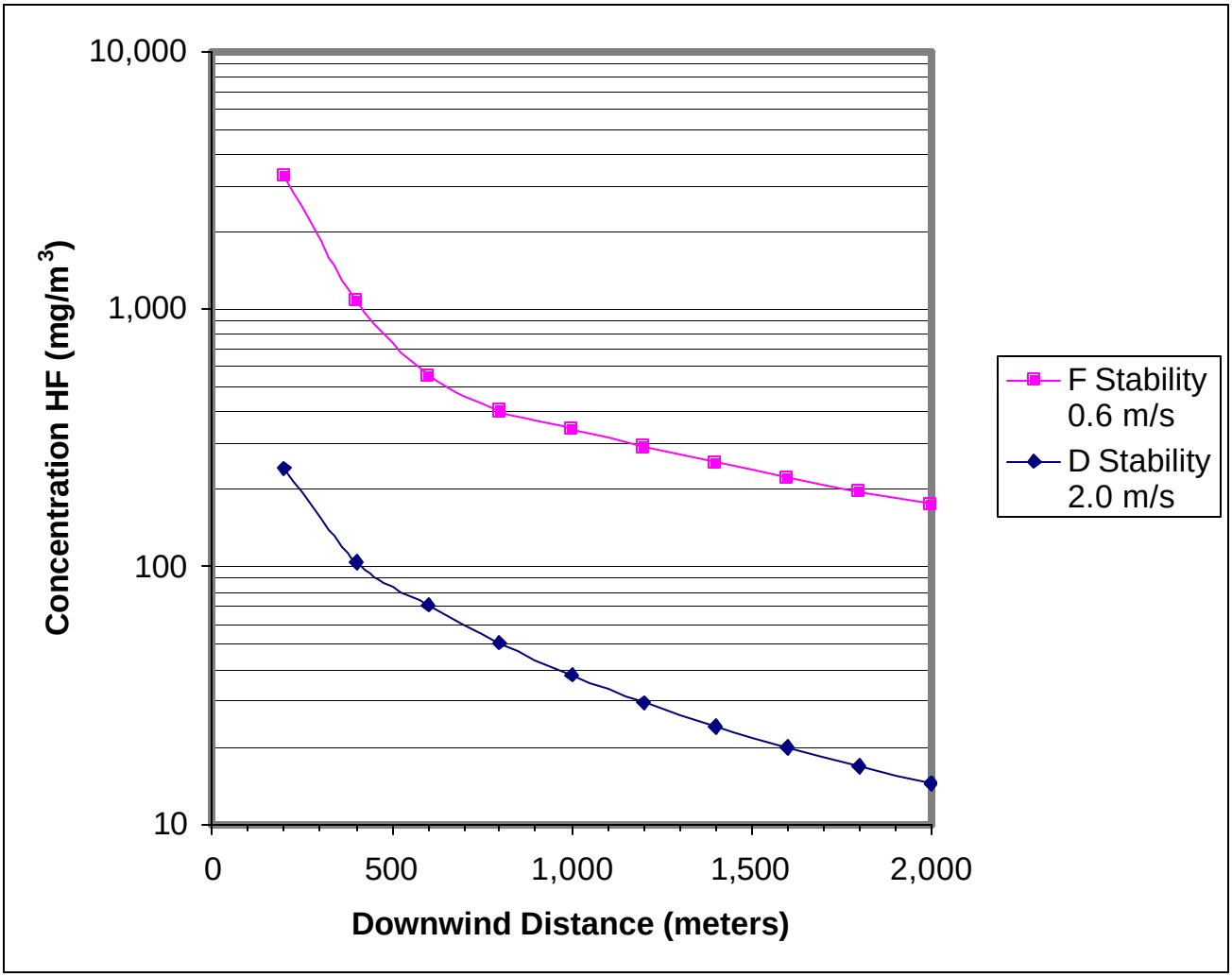

FIGURE 3.7-5

AIRBORNE HYDROGEN FLUORIDE CONCENTRATIONS DUE TO A HEATER RUNAWAY RELEASE

REFERENCE NUMBER
Figures 3.7.doc

REVISION DATE: DECEMBER 2003

TABLE OF CONTENTS

Page

3.8 ITEMS RELIED ON FOR SAFETY (IROFS) 3.8-1

3.8.1 IROFS 3.8-1
3.8.2 Sole IROFS List 3.8-2
3.8.3 Management Measures 3.8-3
3.8.4 References 3.8-3

LIST OF TABLES

Table 3.8-1 Items Relied On For Safety (IROFS)
Table 3.8-2 Sole Items Relied On For Safety (IROFS)

3.8 ITEMS RELIED ON FOR SAFETY (IROFS)

This section of the Integrated Safety Analysis (ISA) Summary lists all of the Items Relied On For Safety (IROFS) designated for high-and intermediate-consequence accident sequences.

3.8.1 IROFS

Table 3.8-1, Items Relied On For Safety (IROFS), provides the IROFS designated for the National Enrichment Facility (NEF). These IROFS either reduce the likelihood of occurrence, or the consequences, of the accident scenarios such that the associated risks are acceptable. The IROFS, which reduce the likelihood of occurrence, are termed "preventive" whereas the IROFS, which reduce the consequences, are termed "mitigative." The majority of the IROFS designated for this facility are preventive. The IROFS designated for the NEF ensure that all of the hazards identified for this facility result in potential accident sequences, which are of acceptable risk as defined in Table 3.1-6, Risk Matrix with Risk Index Values. There are no IROFS that are frequently or continuously challenged.

Table 3.8-1, describes each IROFS, identifies its expected safety function, and references the accident sequence (in Table 3.7-2, Accident Sequence Descriptions and Table 3.7-4, External Events and Fire Accident Descriptions) that describes the conditions needed for the IROFS to reliably perform its function and the effects of its failure. The Table 3.8-1 description of each IROFS also identifies the reliability management measures applied to it. The reliability for an IROFS is proportionate to the amount of risk reduction relied on in the ISA. Thus, the level of the reliability management measures applied to an IROFS is commensurate with the required reliability. Management measures will ensure that IROFS are designed, implemented, and maintained, as necessary, to be available and reliable to perform their safety function when needed. The degree of reliability and availability of IROFS ensured by these measures are consistent with the evaluations of accident likelihood in the ISA. For reliability management measures involving tests, the time interval between tests of the associated IROFS, are stated in Table 3.8-1.

Certain hazards were identified during the HAZOP, which were not assessed using the accident sequence and risk index evaluation process. These hazards were identified as potentially leading to accident sequences which could result in a criticality accident, and were therefore conservatively assigned as high consequence hazards. During the HAZOP process, preventive measures were identified which would eliminate the potential hazard. These measures are identified as the following IROFS in Table 3.8-1.

- IROFS25 – Control of passive design (shape/geometry) of Citric Acid Tank in the Flexible Hose Decontamination System.
- IROFS29 – Control of type of trap media material used in chemical traps.
- IROFS30 – Control of type of lubrication oil type used in process vacuum pumps.
- IROFS31 – Control of sampling of spent trap contents for total uranium content.
- IROFS32 – Control of passive design of flexible cleaning and washing loops
- IROFS33 – Control of passive design of sample bottle cleaning and washing loops.

- IROFS34 – Control requiring emptying of pump oil into safe geometry containers.
- IROFS45 Control of storage of product cylinders.

For accident sequences postulated to result in nuclear criticality, the double contingency protection requirement is satisfied by IROFS and multiple independent controls on a single process parameter. In order to identify IROFS, it was conservatively assumed that initiating events would result in criticality. The administrative control IROFS associated with criticality accident sequences have been specified consistent with the definition of "Items relied on for safety" in 10 CFR 70.4 Definitions (CFR, 2003a). Specifically, these administrative control IROFS represent additional activities, beyond the minimum set of IROFS necessary for compliance with the performance requirements, to provide margin to criticality.

IROFS will be designed, constructed, tested and maintained to QA Level 1. IROFS will comply with design requirements established by the ISA and the applicable codes and standards (current approved version at the time of design). IROFS components and their designs will be of proven technology for their intended application. These IROFS components and systems will be qualified to perform their required safety functions under normal and accident conditions, e.g., pressure, temperature, humidity, seismic motion, as required by the ISA. IROFS systems will be designed and maintained consistent with the reliability assumptions in the ISA. Redundant IROFS systems will be separate and independent from each other. IROFS systems will be designed to be fail-safe. In addition, IROFS systems will be designed such that process control system failures will not affect the ability of the IROFS systems to perform their required safety functions. Control systems will not be used to perform IROFS functions. Installation of IROFS systems will be in accordance with engineering specifications and manufacturer's recommendations. Required testing and calibration of IROFS will be consistent with the assumptions of the ISA and setpoint calculations, as applicable.

The following information related to IROFS will be available onsite in the ISA documentation once final design is completed.

- Hardware IROFS design details, such as system schematics and/or descriptive lists, sufficient to determine the structures, system, equipment or component included within the hardware IROFS' boundary
- Identification of essential utilities and support systems on which the IROFS depends to perform the intended safety functions
- Operating ranges and limits for measured process variables, e.g., temperature, pressure, associated with IROFS
- Basis for establishing the average vulnerable outage time to maintain acceptable IROFS availability
- Safety limits and safety margins, as applicable.

3.8.2 Sole IROFS List

The sole IROFS for the NEF are provided in Table 3.8-2, Sole Items Relied On For Safety (IROFS). Table 3.8-2 identifies the sole IROFS titles, IROFS identifier, and references the accident sequence (in Table 3.7-2, Accident Sequence Descriptions, and Table 3.7-4, External Events and Fire Accident Descriptions) that describes the conditions needed for the IROFS to

reliably perform its function and effects of its failure. The description of the sole IROFS associated safety functions is provided in Table 3.8-1. Sole IROFS are those designated as Class A on Table 3.8-1. The reliability management measures applied to the sole IROFS are provided in Table 3.8-1.

A sole IROFS is a single item or feature that is relied upon to prevent or mitigate an accident for which the consequences could exceed the performance requirements in 10 CFR 70.61 (CFR, 2003b). It is acceptable to rely on these sole IROFS for certain accident sequences because these IROFS will reliably provide sufficient preventive and mitigative features to ensure that the associated accident sequence results in an acceptable risk.

3.8.3 Management Measures

The management measures to be applied to all IROFS are provided on Table 3.8-1 under the column labeled “Reliability Management Measures,” and SAR Chapter 11, Management Measures.

3.8.4 References

CFR, 2003a. Title 10, Code of Federal Regulations, Section 70.4, Definitions, 2003.

CFR, 2003b. Title 10, Code of Federal Regulations, Section 70.61, Performance Requirements, 2003.

(This page intentionally left blank)

TABLES

(This page intentionally left blank)

Table 3.8-1 Items Relied On For Safety (IROFS)

Items Relied On For Safety (IROFS)								
IROFS	**Accident Sequence(s)**	**Type of Accident**	**Type of IROFS**	**Class of IROFS**	**Description of Safety Function**	**Failure Probability Index Numbers**	**Reliability Management Measures**	**SAR Section(s) for IROFS Reference**
IROFS1	TT2-1 UF2-1 PT2-1 PB2-1	Chemical	AEC	B	High Temperature Trip of Defrost Heater – Hardwired temperature switch for automatic, fail-safe, high temperature trip of cold box defrost heaters and fans at Tails Low Temperature Take-off Stations, Feed Purification Low Temperature Take-off Stations, Product Low Temperature Take-off Stations, and Product Blending Receiver Stations.	-2	Annual Test	3.4.2.8.A 3.4.4.8.A 3.4.5.8.A 3.4.6.8.A
IROFS2	TT2-1 UF2-1 PT2-1 PB2-1	Chemical	AEC	B	Redundant High Temperature Trip of Defrost Heater - Temperature switch for automatic, fail-safe, high temperature trip of cold box defrost heaters and fans at Tails Low Temperature Take-off Stations, Feed Purification Low Temperature Take-off Stations, Product Low Temperature Take-off Stations and Product Blending Receiver Stations. These trips to be independent and diverse, (e.g., capillary sensor) from IROFS1.	-2	Annual Test	3.4.2.8.B 3.4.4.8.B 3.4.5.8.B 3.4.6.8.B
IROFS3	TT3-1 UF3-1 PB3-3 CP1-4 EC4-1	Chemical	AEC	A	Evacuation Skid Carbon Trap Weight Trip – Automatic trip of the vacuum pump on high weight of the carbon trap (single train) in the Tails Evacuation System, Feed Purification Subsystem, Product Vent Subsystem,	-2	Annual Test	3.4.2.8.C 3.4.3.8 3.4.4.8.C 3.4.5.8.C 3.4.6.8.C

Table 3.8-1 Items Relied On For Safety (IROFS)

IROFS	Accident Sequence(s)	Type of Accident	Type of IROFS	Class of IROFS	Description of Safety Function	Failure Probability Index Numbers	Reliability Management Measures	SAR Section(s) for IROFS Reference
IROFS3 (continued)	PT3-2 VR1-5 DC1-5 DC1-6 DC1-7 DC1-8				Blending and Sampling Vent Subsystem, Ventilated Room, Cylinder Preparation, Cascade Sampling Rig and Contingency Dump System evacuation skids.			3.4.8.8 3.5.17.4A 3.5.19.4
IROFS3	DC1-1 DC1-2 DC1-3 DC1-4 TP8-2	Chemical	AEC	B	Evacuation Skid Carbon Trap Weight Trip – Automatic trip of the vacuum pump on high weight of the carbon trap (single train) in the Contingency Dump System and Centrifuge Test Facility Vent Subsystem.	-2	Annual Test	3.4.8.8
IROFS3	PB2-3 PB3-1 VR1-1 CP1-1 EC4-2 PT3-1 PB3-1 DC1-9	Criticality	AEC	B	Evacuation Skid Carbon Trap Weight Trip – Automatic trip of the vacuum pump on high weight of the Carbon trap (single train) in the Product Vent Subsystem, Blending and Sampling Vent Subsystem, Ventilated Room, Cylinder Preparation Room, Cascade Sampling Rig and Contingency Dump evacuation skids.	-2	Annual Test	3.4.3.8 3.4.4.8.C 3.4.6.8.C 3.4.8.8 3.5.17.4.A 3.5.19.4
IROFS4	UF1-1 PB1-1	Chemical	AEC	B	High Temperature Trip of Feed Station Heaters – Hardwired temperature switch for automatic, fail-safe, high temperature trip of Feed Station and Blending Donor Station heaters.	-2	Annual Test	3.4.2.8.D 3.4.6.8.D
IROFS5	UF1-1 PB1-1	Chemical	AEC	B	Redundant High Temperature Trip of Feed Station Heaters - Temperature switch for automatic, fail-safe, high temperature trip of Feed Station and	-2	Annual Test	3.4.2.8.E 3.4.6.8.E

Table 3.8-1 Items Relied On For Safety (IROFS)

IROFS	Accident Sequence(s)	Type of Accident	Type of IROFS	Class of IROFS	Description of Safety Function	Failure Probability Index Numbers	Reliability Management Measures	SAR Section(s) for IROFS Reference
IROFS5 (continued)					Blending Donor Station heaters. These trips to be independent and diverse, (e.g., capillary sensor) from IROFS4.			
IROFS6	N/A	Criticality	AC	N/A	Administrative controls through the use of procedures and operator training ensure product cylinders are not processed as feed cylinder. This includes cylinder marking/identification, cylinder management system and sampling of feed material in the feed station before placing feed cylinder on line.	-3	Operator training and annual refresher	5.6 3.4.4.8.D
IROFS7	PT2-2	Criticality	PEC	A	Use of passive engineered design control to physically prevent a product cylinder from being placed in a Solid Feed station.	-3	Annual Inspection	5.6
IROFS8	PT3-1 PT3-3 PB2-3 PB3-1 PB3-2 PB4-5 EC4-2	Criticality	AEC	B	A ^{235}U selective gamma monitor system which monitors the Separations Building GEVS filters and electrostatic precipitator. Upon detection of Hi-Hi gamma levels in the SB GEVS filters, this system trips the operating Separations Building GEVS train and automatically starts the standby SB GEVS filter train. Upon detection of Hi-Hi gamma levels in the SB GEVS precipitator, the system bypasses and isolates the electrostatic precipitator.	-2	Annual Test	3.4.9.1.6
IROFS9	PT3-3 PB3-2	Criticality	AC	B	Product Vent Subsystem Carbon Trap Temperature Alarm - A high carbon trap temperature alarm in the control room, resulting in a operator response to	-2	Annual Test, Operator training and annual	3.4.4.8.E 3.4.6.8.F

Table 3.8-1 Items Relied On For Safety (IROFS)

IROFS	Accident Sequence(s)	Type of Accident	Type of IROFS	Class of IROFS	Description of Safety Function	Failure Probability Index Numbers	Reliability Management Measures	SAR Section(s) for IROFS Reference
IROFS9 (continued)					isolate the Product Vent Subsystem and Blending and Sampling Vent Subsystem from the GEVS.		refresher	
IROFS10	PB4-1 PB4-3	Chemical	PEC	A	Product Liquid Sampling Autoclave Integrity – Product Liquid Sampling Autoclave vessel assembly pressure boundary integrity.	-3	Annual Inspection	3.4.7.8.A
IROFS10	PB4-4	Chemical	PEC	B	Product Liquid Sampling Autoclave Integrity – Product Liquid Sampling Autoclave vessel assembly pressure boundary integrity.	-3	Annual Inspection	3.4.7.8.A
IROFS11	PB4-2	Chemical	AEC	B	A fail-safe hard-wired independent Product Liquid Sampling Autoclave high temperature heater and fan trip.	-2	Annual Test	3.4.7.8.B
IROFS12	PB4-2	Chemical	AEC	B	A diverse, independent, Product Liquid Sampling Autoclave high air pressure trip of Product Liquid Sampling Autoclave heater and fan.	-2	Annual Test	3.4.7.8.C
IROFS13	PB4-5	Criticality	AEC	B	Product Liquid Sampling Autoclave HF Detector Trip – On HF release into the product liquid sampling autoclave, this trip will inhibit retraction of the shotbolt which prevents opening the GEVS vent valve.	-2	Annual Test	3.4.7.8.D
IROFS14	PT1-1 PT3-4 PT4-1 PB3-4	Criticality	PEC	A	Passive engineered control to ensure physical separation of the component from other sources of enriched uranium while in transit, that maintains, by geometry, the specified requirements for criticality safety.	-3	Annual Inspection	5.6

Table 3.8-1 Items Relied On For Safety (IROFS)

IROFS	Accident Sequence(s)	Type of Accident	Type of IROFS	Class of IROFS	Description of Safety Function	Failure Probability Index Numbers	Reliability Management Measures	SAR Section(s) for IROFS Reference
IROFS15	N/A	Criticality	AC	N/A	Administrative control and associated training of personnel on the movement/ interaction of components containing fissile material and the criticality safety concerns associated with the movement.	-2	Operator training and annual refresher	5.6
IROFS16	PT2-3 PB1-2 PB2-2 CP1-2	Criticality	AC	A	Administrative control through the use of procedures and training for moderator control program including visual inspection of cylinders, weighing of product cylinders, vacuum testing of cylinders to verify no water content, heel declaration of cylinders from certified vendors, venting control and tracking of individual cylinders, and enhanced training program for cylinder handling.	-3	Operator training and annual refresher	5.6
IROFS17	N/A	Criticality	PEC	N/A	Passive engineered control, i.e., storage array, to ensure physical separation of components that maintains, by geometry, the specified requirements for criticality safety. Design of passive array precludes submergence.	-3	Annual Inspection	5.6
IROFS18	N/A	Criticality	AC	N/A	Administrative control and associated training of personnel on the storage/interaction of components containing fissile material and the criticality safety concerns associated with storage or interaction.	-2	Operator training and annual refresher	5.6
IROFS19	DS1-3 DS2-3 LW1-1 LW2-1 LW3-1	Criticality	AC	A	Administrative control for criticality mass control including tank sampling, visual inspection of the tank after emptying, batch limits on processing with double batching allowance, limiting the number	-3	Operator training and annual refresher	5.6

IROFS	Accident Sequence(s)	Type of Accident	Type of IROFS	Class of IROFS	Description of Safety Function	Failure Probability Index Numbers	Reliability Management Measures	SAR Section(s) for IROFS Reference
IROFS19 (continued)	LW5-1				of product pumps processed per batch and operator training program for the storage/interaction of materials containing fissile material.			
IROFS20	CL3-1	Criticality	AEC	B	Cold trap high temperature interlock for Cold Trap No. 2, Valve. Upon high temperature, this interlock will close this valve, which is in line to the Sub-sampling rig vacuum pump. This will prevent potential flow of UF_6 to the Technical Services Building GEVS in the event that the associated UF_6 cold trap is above an adequate desublimation temperature.	-2	Annual Test	3.5.18.4.A
IROFS21	VR1-1 VR1-2 CL3-1 CP1-1	Criticality	AEC	B	Gamma Monitor Technical Services Building GEVS - ^{235}U selective gamma monitoring system to monitor TSB GEVS filters. Signal automatically trips TSB GEVS fan.	-2	Annual Test	3.4.9.2.6
IROFS22	VR1-2	Criticality	AEC	B	Ventilated Room Vacuum System Carbon Trap Temperature Trip – Automatic trip of the vacuum pump on high temperature of the carbon trap (single train) in Ventilated Room vacuum system.	-2	Annual Test	3.5.17.4.B
IROFS23	VR1-3 VR2-1	Chemical	AC	A	Personnel Respiratory Protection – Administrative controls through the use of procedures and training requiring that personnel wear respiratory protection when (1) handling carbon trap material	-2	Operator training and annual refresher	3.5.17.4.C

IROFS	Accident Sequence(s)	Type of Accident	Type of IROFS	Class of IROFS	Description of Safety Function	Failure Probability Index Numbers	Reliability Management Measures	SAR Section(s) for IROFS Reference
IROFS23 (continued)					containing SNM, (2) performing positive pressure testing of UF_6 cylinder after repair/replacement of a leaking cylinder component.			
IROFS23	VR2-2	Chemical	AC	B	Personnel Respiratory Protection – Administrative controls through the use of procedures and training requiring that personnel wear respiratory protection when handling sodium fluoride trap material containing Uranic material.	-2	Operator training and annual refresher	3.5.17.4.C
IROFS24	CL3-2	Chemical	AC	A	Technical Services Building GEVS Operation – Administrative controls through the use of procedures and training requiring that (1) the Technical Services Building GEVS be connected to the assembly used to remove airborne sodium fluoride fines shall be operating during the handling of chemical dump trap material containing Uranic material, and the (2) TSB GEVS connected to Chemical Lab Hood when UF_6 Sub-sampling Unit is operated.	-2	Annual Test Operator training and annual refresher	3.5.18.4.C
IROFS24	CL3-3 VR2-2	Chemical	AC	B	Technical Services Building GEVS Operation – Administrative controls through the use of procedures and training requiring that (1) the Technical Services Building GEVS be connected to an assembly used to remove airborne sodium fluoride fines shall be operating during the handling of chemical dump	-2	Annual Test Operator training and annual refresher	3.5.17.4.D 3.5.18.4.C

IROFS	Accident Sequence(s)	Type of Accident	Type of IROFS	Class of IROFS	Description of Safety Function	Failure Probability Index Numbers	Reliability Management Measures	SAR Section(s) for IROFS Reference
IROFS24 (continued)					trap material containing SNM and (2) the TSB GEVS connected to Chemical Lab Hood when UF_6 Sub-sampling Unit is operated.			
IROFS25	N/A	Criticality	PEC	N/A	Passive design of Citric Acid Tank in the Flexible Hose Decontamination System, i.e., shape/geometry, to maintain the specified requirements for criticality safety.	N/A	N/A	5.6
IROFS26	SEISMIC-1 SEISMIC-2 SEISMIC-3	Chemical	AEC	A	Building HVAC system trip following a seismic event. Need to stop HVAC flow from UF_6 Area, Cascade Halls and Product Blending & Sampling Area to outside environment to mitigate consequences.	-2 (UF6 Area and Blending & Sampling Area) -2 Cascade Halls)	Annual Test Monthly Test	3.5.1.5.A
IROFS27	SEISMIC-1 SEISMIC-2 SEISMIC-3 TORNADO SNOW LOCALPRECIP	Chemical	PEC	A	Building design bases for seismic, tornado, tornado missile, high wind, roof snow load, roof ponding due to local intense precipitation and site flooding due to local intense precipitation. The Uranium Byproduct Cylinders Storage Pad is designed to accommodate the flooding due to local intense precipitation.	N/A	N/A	3.3.2.A 3.3.2.C
IROFS28	SEISMIC-5	Chemical	PEC	A	Seismic design basis for Product Liquid Sampling Autoclave.	N/A	N/A	3.4.7.8.E

Table 3.8-1 Items Relied On For Safety (IROFS)

IROFS	Accident Sequence(s)	Type of Accident	Type of IROFS	Class of IROFS	Description of Safety Function	Failure Probability Index Numbers	Reliability Management Measures	SAR Section(s) for IROFS Reference
IROFS29	N/A	Criticality	AC	N/A	Administrative control through the use of procedures and training to control the type of trap media chemicals that are used in the chemical traps.	N/A	N/A	5.6
IROFS30	N/A	Criticality	AC	N/A	Administrative control through the use of procedures and training to control the type of oil used in process vacuum pumps.	N/A	N/A	5.6
IROFS31	N/A	Criticality	AC	N/A	Administrative control through the use of procedures and training to require sampling of spent trap contents for total uranium before trap material is transferred and bulk stored in waste containers. Sampling will confirm subcriticality of waste container.	N/A	N/A	5.6
IROFS32	N/A	Criticality	PEC	N/A	Use of passive engineered design of the flexible cleaning and washing loops, i.e., shape/geometry, to maintain specified requirements for criticality safety.	N/A	N/A	5.6
IROFS33	N/A	Criticality	PEC	N/A	Use of passive engineered design of the sample bottle cleaning and washing loops, i.e., shape/geometry, to maintain specified requirements for criticality safety.	N/A	N/A	5.6
IROFS34	N/A	Criticality	AC	N/A	Administrative controls through the use of procedures and training to require emptying of pump oil into safe geometry waste containers meeting criticality safety requirements.	N/A	N/A	5.6

Table 3.8-1 Items Relied On For Safety (IROFS)

IROFS	Accident Sequence(s)	Type of Accident	Type of IROFS	Class of IROFS	Description of Safety Function	Failure Probability Index Numbers	Reliability Management Measures	SAR Section(s) for IROFS Reference
IROFS35	FF1-1 FF6-1 FF8-1 FF11-1 FF15-1 FF21-1 FF23-1 FF24-1 FF38-1	Chemical	PEC	A	Fire Barriers prevent propagation of fires into/out of areas containing uranic material..	-3	Annual Inspection	7.1.1
IROFS36	FF1-2 FF5-1 FF6-2 FF7-1 FF8-2 FF11-2 FF16-1 FF16-2 FF21-2 FF23-2 FF25-1 FF25-2 FF38-2 FF42-1 FF43-1 FF43-2 FF44-1	Chemical	AC	A	Administrative controls through the use of procedures and training associated with preventing severe fire exposures to systems or components of concern. Fire Safety Program: (1) Program bars entry of any bulk flammable fuel/fueling vehicles on-site. This does not include diesel fuel deliveries which will be required to refill the diesel generator fuel tanks. Diesel fuel delivery vehicles will be prohibited from entering the UBC Storage Pad perimeter road, (2) Program to maintain clear cutting of vegetation onsite, (3) Program to control/minimize transient combustible loading in all radiation/ uranium areas, (4) Program to control fire ignition sources (hot work, welding, cutting, grinding, etc.) in all plant areas, (5) Program to limit on-site cylinder movement vehicles to electric drive or diesel-powered with a diesel fuel capacity limit of < 280 L (74 gal), (6) Program limits uranic material liquid and	-3	Personnel training and annual refresher	7.1.1

IROFS	Accident Sequence(s)	Type of Accident	Type of IROFS	Class of IROFS	Description of Safety Function	Failure Probability Index Numbers	Reliability Management Measures	SAR Section(s) for IROFS Reference
IROFS36 (continued)					solid waste transfer and packing containers to metal (non-combustible) only. This does not apply to packaging within these containers (e.g., plastic liners), to bags for transporting laundry and similar non- or low-contamination solids, or to laboratory size sample containers (required for maintaining sample purity), (7) Provides a minimum 1 m (3 ft) setback from the CRDB loading dock , (8) Program limits the design of cabling to IEEE-383 fire resistant cabling for all uranic material system power, instrumentation, and control circuits, (9) Limits vehicles allowed onto the UBC Storage Pad area to cylinder movers and other essential vehicles with a fuel capacity limit of < 280 L (74 gal), (10) The sample bottle storage room/vault in the TSB will have no combustibles present in the room, (11) The thermal enclosure surrounding each assay shall be constructed of and insulated with non-combustible materials.			
IROFS37	FF25-2	Chemical	AEC	A	Fire detection and alarm system with ventilation shutoff interlock and limited building leakage.	-2	Annual Test	3.5.17.4.E

Table 3.8-1 Items Relied On For Safety (IROFS)

IROFS	Accident Sequence(s)	Type of Accident	Type of IROFS	Class of IROFS	Description of Safety Function	Failure Probability Index Numbers	Reliability Management Measures	SAR Section(s) for IROFS Reference
IROFS38	TT2-2 UF2-2 PT2-4 PB2-4	Chemical	AC	A	Cylinder Over fill Administrative Control– Through the use of procedures and training, administratively control cylinder over fill by verifying that cylinder weight is within specified limits once per shift.	-3	Personnel training and annual refresher	3.4.2.8.F 3.4.4.8.F 3.4.5.8.D 3.4.6.8.G
IROFS40	VR2-3 VR2-4 VR2-5 VR2-6 SW1-1 SW1-2 FR1-1 FR1-2 FR2-1 FR2-2 DS1-1 DS1-2 DS2-1 DS2-2 DS2-5 DS3-1 DS3-2 LW1-2 LW1-3	Criticality	AC	A	Administrative control through the use of procedures and training of storage or interaction of components containing uranium with an independent verification of the storage or interaction.	-3	Personnel training and annual refresher	5.6
IROFS41	SEISMIC-1 SEISMIC-2 SEISMIC-3	Chemical	PEC	A	Limitation on building leakage to outside environment following HVAC trip (IROFS26).	N/A	N/A	3.3.2.B
IROFS42	PB4-4	Chemical	AC	B	Administrative control through use of procedures to require product cylinders to be weighed in the blending and sampling area before placement into the	-2	Annual Test, Personnel training and annual	3.4.6.8.H

IROFS	Accident Sequence(s)	Type of Accident	Type of IROFS	Class of IROFS	Description of Safety Function	Failure Probability Index Numbers	Reliability Management Measures	SAR Section(s) for IROFS Reference
IROFS42 (continued)					Product Liquid Sampling Autoclave. This allows determination that there is no overfill condition before heating.		refresher	
IROFS43	CL3-3	Chemical	AEC	B	High Temperature Trip of Hot Box Heater – Temperature switch for automatic, fail-safe, high temperature trip of hot box heaters at UF_6 Sub-sampling Unit.	-2	Annual Test	3.5.18.4.B
IROFS44	INTERNAL FLOODING FROM ON-SITE TANKS AND WATER IMPOUND-MENTS	Chemical / Criticality	PEC	A	Design bases for above ground liquid storage tanks and water impoundments not to pose a flooding risk that could damage critical structures and/or systems under an assumed catastrophic failure and release of full contents.	N/A	N/A	3.3.2.D
IROFS45	N/A	Criticality	AC	A	Administrative control through the use of procedures and training for the storage of product cylinders in those areas where product is produced, transported or stored with an independent verification of the storage.	-2	Operator training and annual refresher	5.6
IROFSC1	DC1-1 DC1-2 DC1-3 DC1-4 DC1-9	Chemical/ Criticality	AC	B	Administrative control through the use of procedures and training to control and independently verify proper filling of NaF traps.	-2	Operator training and annual refresher	5.6
IROFSC6	EC3-1	Criticality	AC	B	Administrative controls with independent verification to ensure the cascade enrichment control device setting calculation is correctly calculated and implemented.	-2	Operator training and annual refresher	5.6

Table 3.8-1 Items Relied On For Safety (IROFS)

IROFS	Accident Sequence(s)	Type of Accident	Type of IROFS	Class of IROFS	Description of Safety Function	Failure Probability Index Numbers	Reliability Management Measures	SAR Section(s) for IROFS Reference
IROFSC7	EC3-1	Criticality	AC	B	Administrative controls for verification of cascade enrichment through assay enrichment sampling.	-2	Operator training and annual refresher	5.6
IROFSC14	TP7-4	Criticality	AC	A	Enhanced admin controls on weight of centrifuge prior to post mortem.	-2	Operator training and annual refresher	5.6
IROFSC15	TP8-1	Chemical	AEC	B	Feed/take-off vessel capillary over-temperature trip isolates heat tracing.	-2	Annual Test	3.4.10.1.4
IROFSC16	TP8-1	Chemical	AEC	B	Feed/take-off vessel high temperature trip isolates heat tracing.	-2	Annual Test	3.4.10.1.4

Table 3.8-2 Sole Items Relied On For Safety (IROFS)

IROFS Identifier	Accident Sequence(s)	Type of Accident	Type of IROFS	Title
IROFS3	TT3-1 UF3-1 PB3-3 CP1-4 EC4-1 TP8-2 PT3-2 VR1-5 DC1-5 DC1-6 DC1-7 DC1-8	Chemical	AEC	Evacuation Skid Carbon Trap Weight Trip.
IROFS7	PT2-2	Criticality	PEC	Passive engineered preventive loading device.
IROFS10	PB4-1 PB4-3	Chemical	PEC	Product Liquid Sampling Autoclave.
IROFS14	PT1-1 PT3-4 PT4-1 PB3-4	Criticality	PEC	Passive engineered preventive transport device.
IROFS16	PT2-3 PB1-2 PB2-2 CP1-2	Criticality	AC	Administrative control through the use of procedures and training for moderator control program.
IROFS19	DS1-3 DS2-3 LW1-1 LW2-1 LW3-1 LW5-1	Criticality	AC	Administrative control for criticality mass control.
IROFS23	VR1-3 VR2-1	Chemical	AC	Personnel Respiratory Protection.
IROFS24	CL3-2	Chemical	AC	Technical Services Building GEVS Operation – Administrative Controls.
IROFS26	SEISMIC-1 SEISMIC-2 SEISMIC-3	Chemical	AEC	Building HVAC system trip following a seismic event.
IROFS27	SEISMIC-1 SEISMIC-2 SEISMIC-3 TORNADO SNOW LOCALPRECIP	Chemical	PEC	Building design bases for seismic, tornado, tornado missile, high wind, roof snow load, roof ponding due to local intense precipitation and site flooding due to local intense precipitation.

Table 3.8-2 Sole Items Relied On For Safety (IROFS)

IROFS Identifier	Accident Sequence(s)	Type of Accident	Type of IROFS	Title
IROFS28	SEISMIC-5	Chemical	PEC	Seismic design basis for Product Liquid Sampling Autoclave.
IROFS35	FF1-1 FF6-1 FF8-1 FF11-1 FF15-1 FF21-1 FF23-1 FF24-1 FF38-1	Chemical	PEC	Fire barriers prevent propagation of fires into/out of areas containing uranic material.
IROFS36	FF1-2 FF5-1 FF6-2 FF7-1 FF8-2 FF11-2 FF16-1 FF16-2 FF21-2 FF23-2 FF25-1 FF25-2 FF38-2 FF42-1 FF43-1 FF43-2 FF44-1	Chemical	AC	Administrative Controls – Fire Safety Program.
IROFS37	FF25-2	Chemical	AEC	Fire Detection and Alarm System with ventilation shutoff interlock and limited building leakage.
IROFS38	TT2-2 UF2-2 PT2-4 PB2-4	Chemical	AC	Cylinder Over fill Administrative Control.
IROFS40	VR2-3 VR2-4 VR2-5 VR2-6 SW1-1 SW1-2	Criticality	AC	Administrative control for storage or interaction of components containing uranium.

Table 3.8-2 Sole Items Relied On For Safety (IROFS)

IROFS Identifier	Accident Sequence(s)	Type of Accident	Type of IROFS	Title
IROFS40 (continued)	FR1-1 FR1-2 FR2-1 FR2-2 DS1-1 DS1-2 DS2-1 DS2-2 DS3-1 DS3-2 LW1-2 LW1-3			
IROFS41	SEISMIC-1 SEISMIC-2 SEISMIC-3	Chemical	PEC	Limitation on Building Leakage to Outside Environment following HVAC trip.
IROFS44	INTERNAL FLOODING FROM ON-SITE TANKS AND WATER IMPOUNDMENTS	Chemical/ Criticality	PEC	Design bases for above ground storage tanks and water impoundments.
IROFSC14	TP7-4	Criticality	AC	Enhanced administrative controls on centrifuge weight prior to post mortem.