Reactor Coolant Pressure Boundary Codes and Standards

Ken F. Hau and Julian W.F. Millard
Managers of, Process System, Reactor & Fuel Handling

Presentation to US Nuclear Regulatory Commission
Washington DC
March 04, 2004

AECL TECHNOLOGIES INC.

Overview

<u>Contents</u>:

- Main Pressure Boundary of RCS
- Main RCS items (feeder, header, pumps, steam generator)
- Fuel Channel
- Fueling Machine
- Conclusions

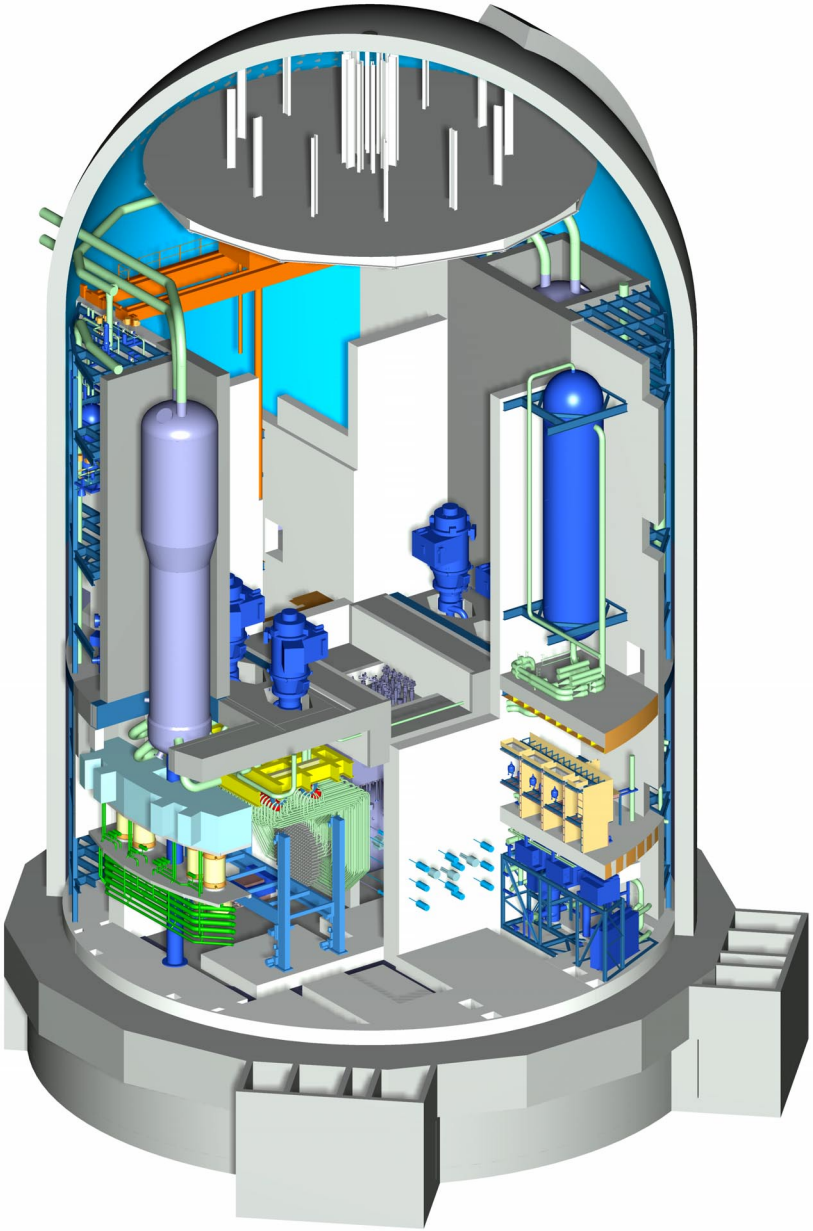

ACR Reactor Layout

- The ACR 700 reactor is an evolutionary design building on past CANDU designs
- It uses slightly enriched fuel in a 284 channel horizontal pressure tube reactor

RCS and Pressurizer Layout

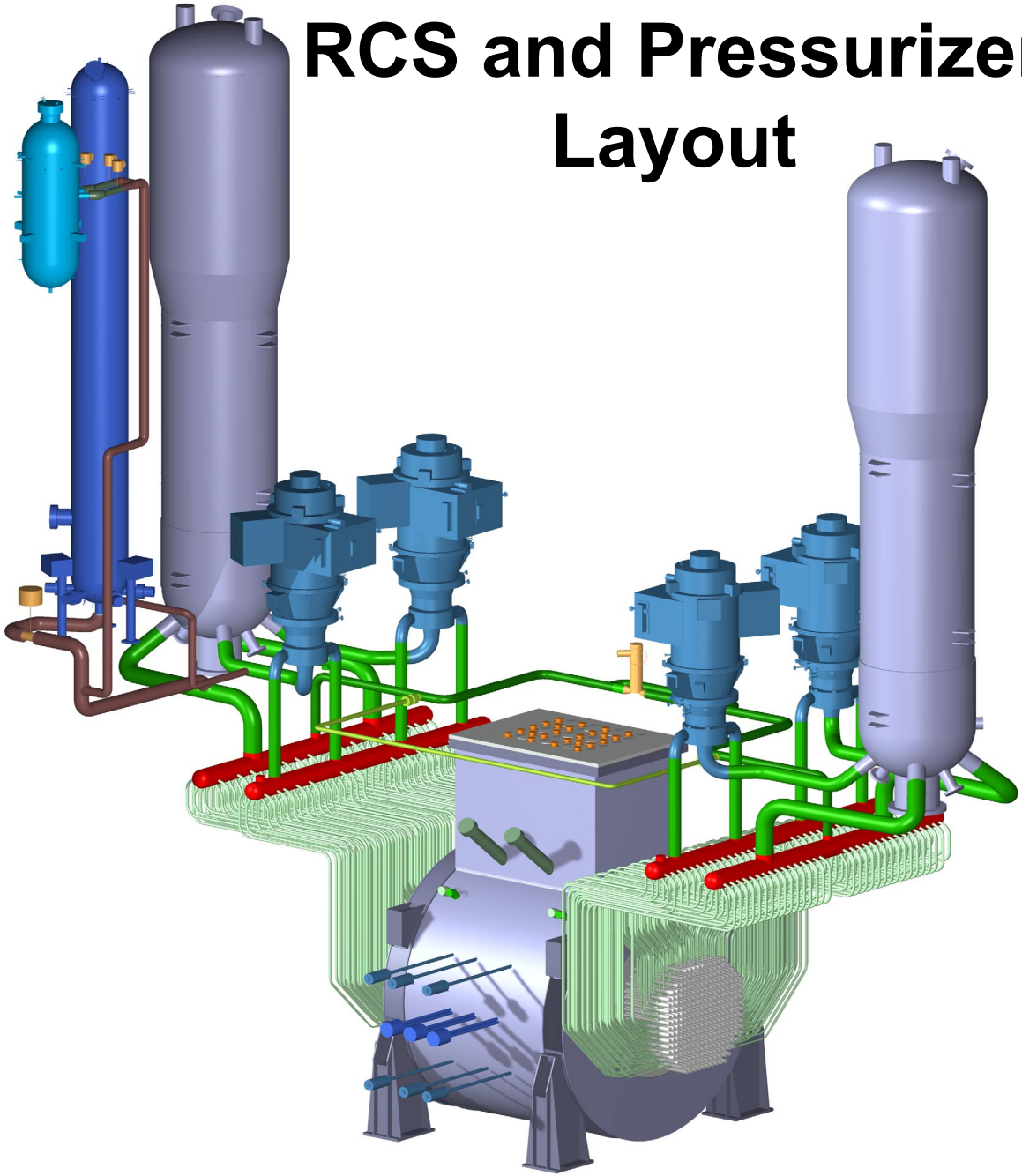

RC Pressure Boundary

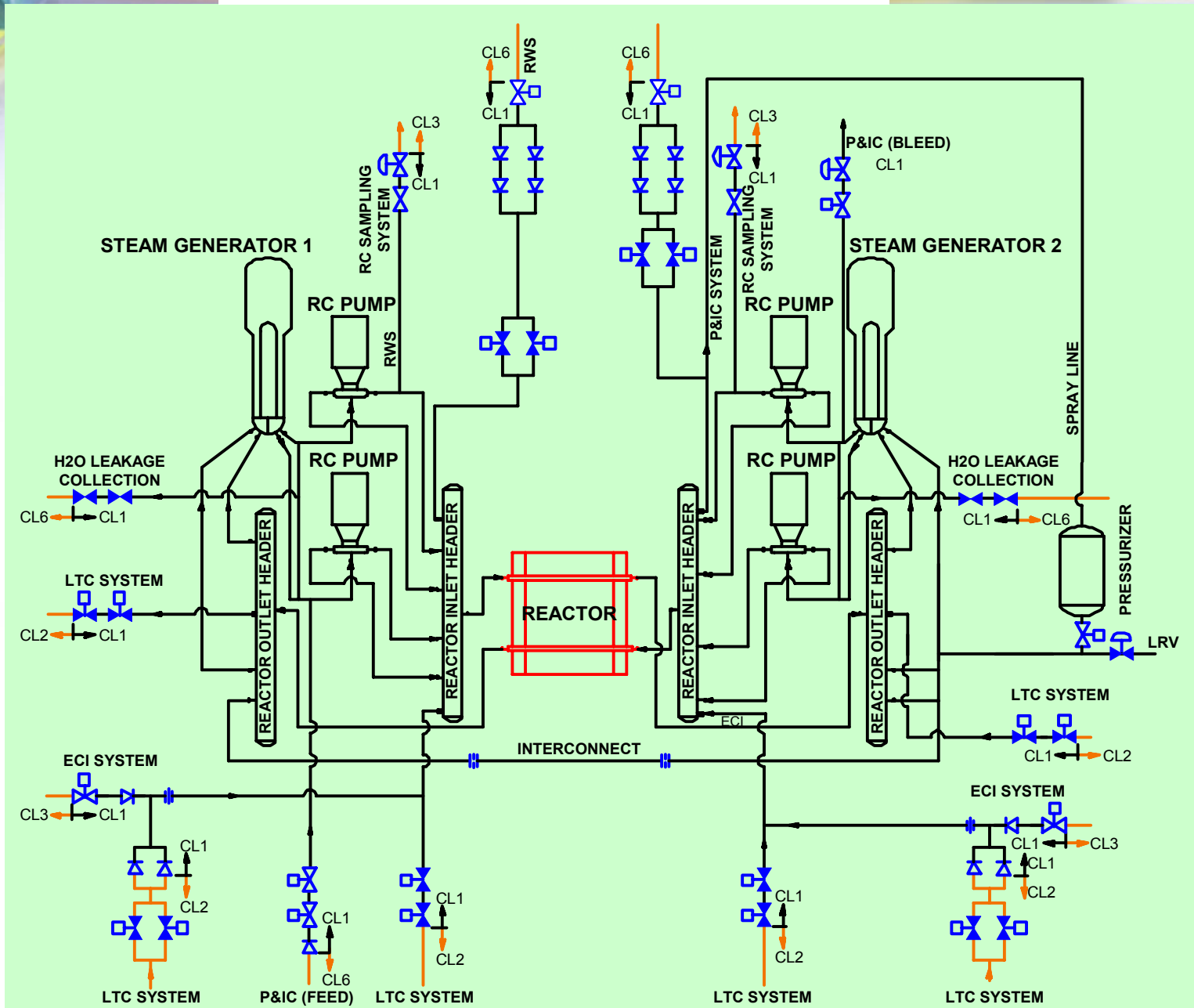

RCPB Components

- Principal Pressure Boundary Components are designed to Class 1 (Gr. A) using ASME Section III including:
  - Steam generators,
  - Pressurizer,
  - RC pumps,
  - Piping (incl. feeders),
  - Headers.
- Other components (e.g. fuel channels) designed using ASME III rules as discussed in rest of meeting.

RC Operating / Design Conditions

Component	Operating		Design	
	Pressure psig (MPa(g))	Temp. °F (°C)	Pressure psig (MPa(g))	Temp. °F (°C)
RC Pump Suction	1682 (11.6)	533.3 (278.5)	1871 (12.9)	561.2 (294)
RC Pumps	1900 (13.1)	533.3 (278.5)	2161 (14.9)	561.2 (294)
Pump Discharge	1900 (13.1)	533.3 (278.5)	2161 (14.9)	561.2 (294)
RIH	1900 (13.1)	533.3 (278.5)	2161 (14.9)	561.2 (294)
ROH	1726 (11.9)	617 (325)	1871 (12.9)	627.8 (331)
SG inlet pipe	1726 (11.9)	617 (325)	1871 (12.9)	627.8 (331)
Steam Generators	1726 (11.9)	617 (325)	1871 (12.9)	627.8 (331)
Pressurizer	1726 (11.9)	617 (325)	1871 (12.9)	627.8 (331)

Fuel Channel Arrangement

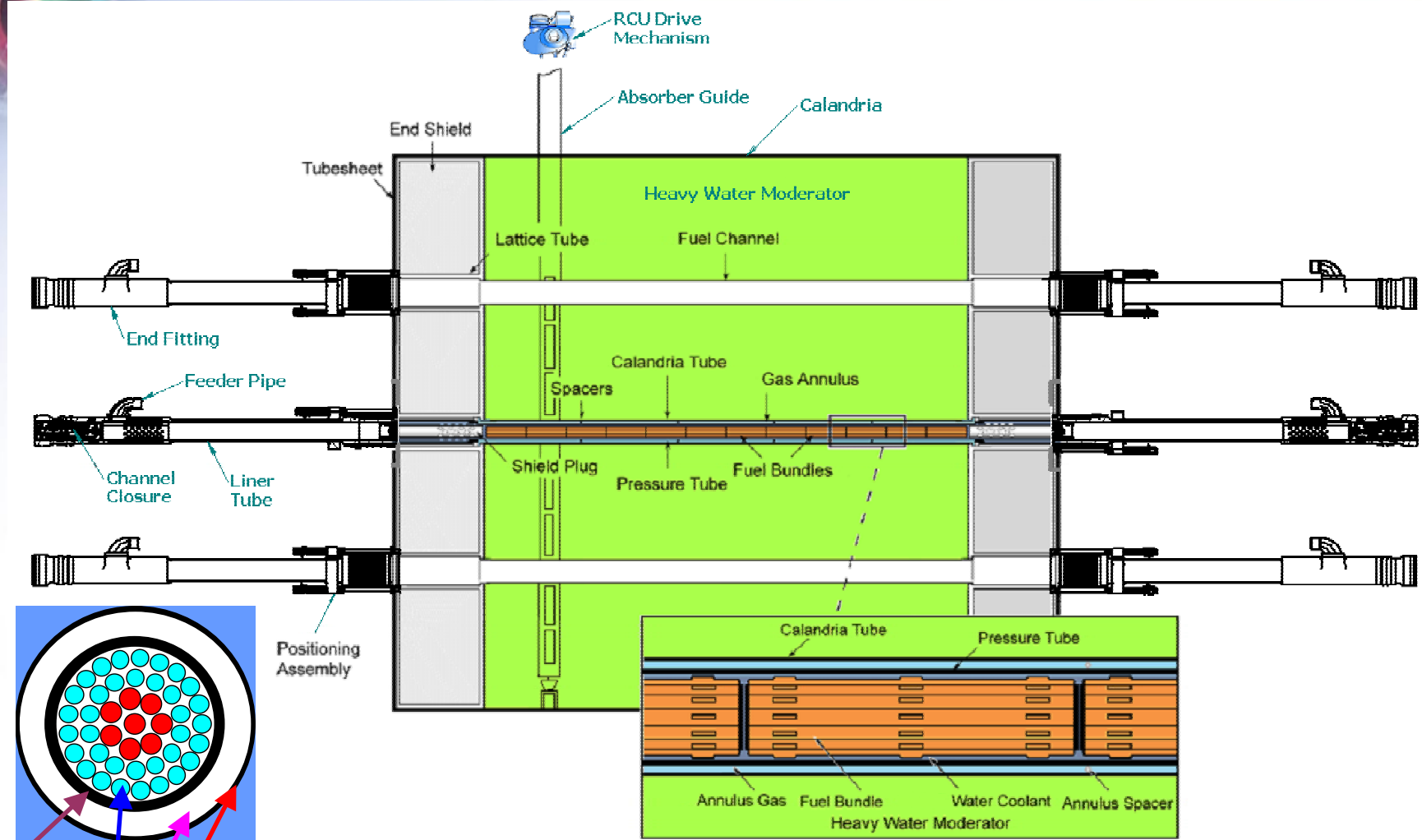

Pressure tube

Fuel elements

Annulus gap

Calandria tube

ACR 700 Fuel Channel

Items 1,2,4,12 are pressure boundary

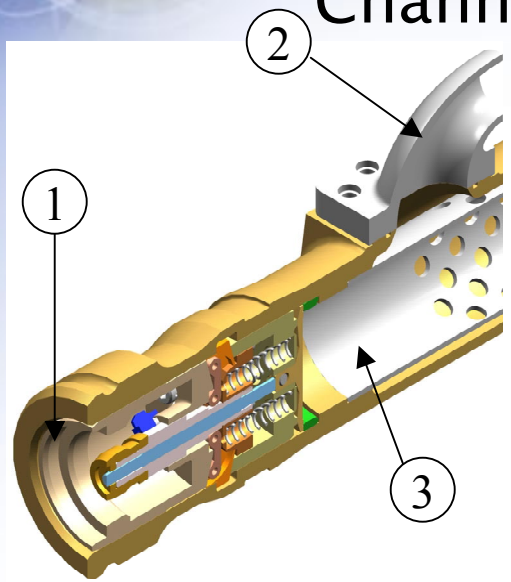

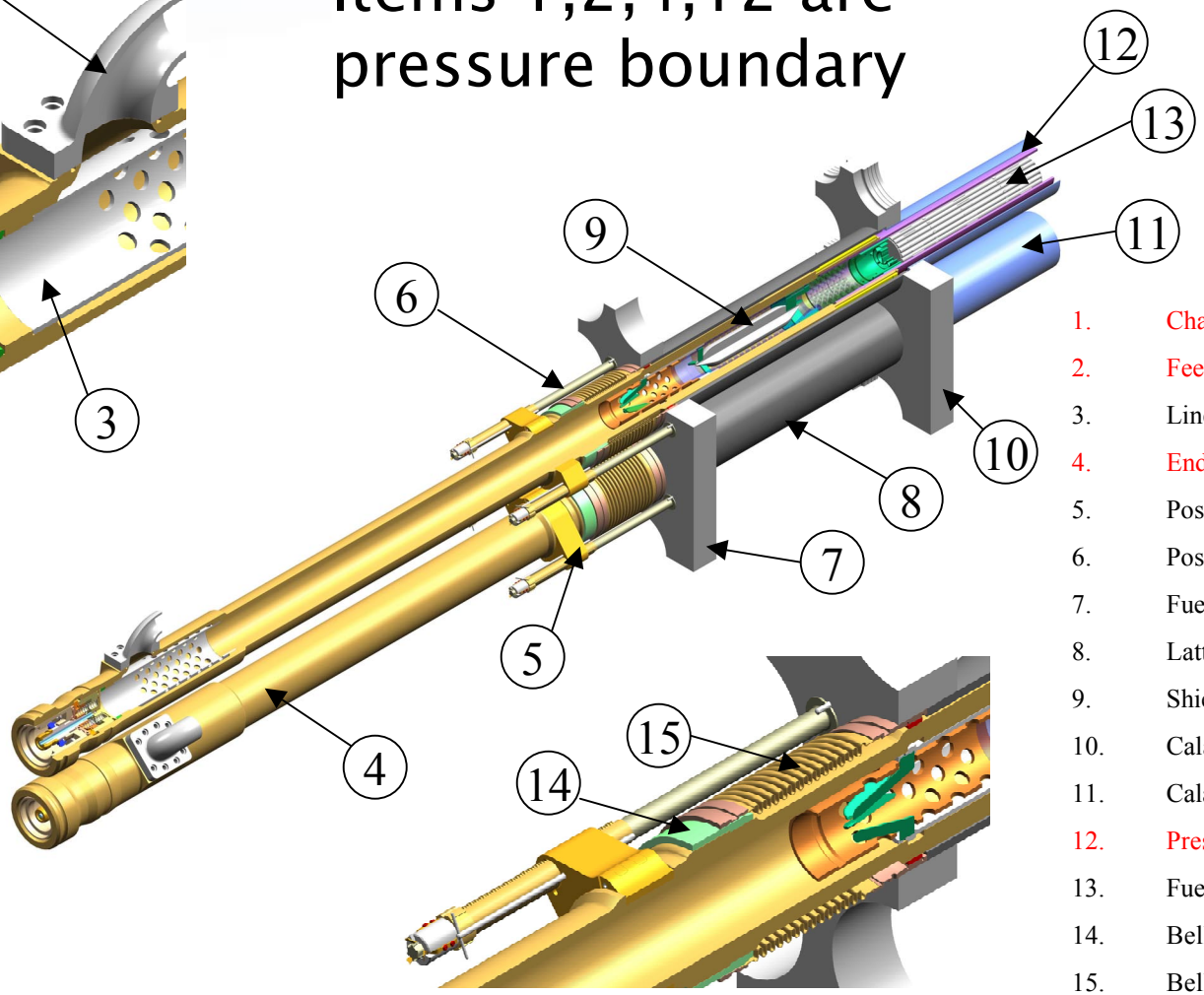

1. Channel Closure
2. Feeder Connection
3. Liner Tube
4. End Fitting
5. Positioning Assembly Yoke
6. Positioning Assembly Stud
7. Fuelling Tubesheet
8. Lattice Tube
9. Shield Plug
10. Calandria Tubesheet
11. Calandria Tube
12. Pressure Tube
13. Fuel Bundle
14. Bellows Attachment
15. Bellows Assembly

Fuel Channel Parts

	Features	Notes
Feeder Connection	Stainless Steel Casting bolted with gasket	Design meets ASME III
End Fitting	Forged, modified 403 stainless	Design to ASME III apart from Material
Roll Joint	PT material roll formed in to grooves in end fitting	ASME III stress limits Extensive qualification
Pressure Tubes	Extensively formed Zirconium Niobium alloy	See later presentation on use of ASME stress limits
Closure Plug	Seal located by body latched and locked in place	Design to ASME III with extra features not covered by ASME (latched jaws)

ACR Fueling Machine Head

Pressure Boundary housings in red

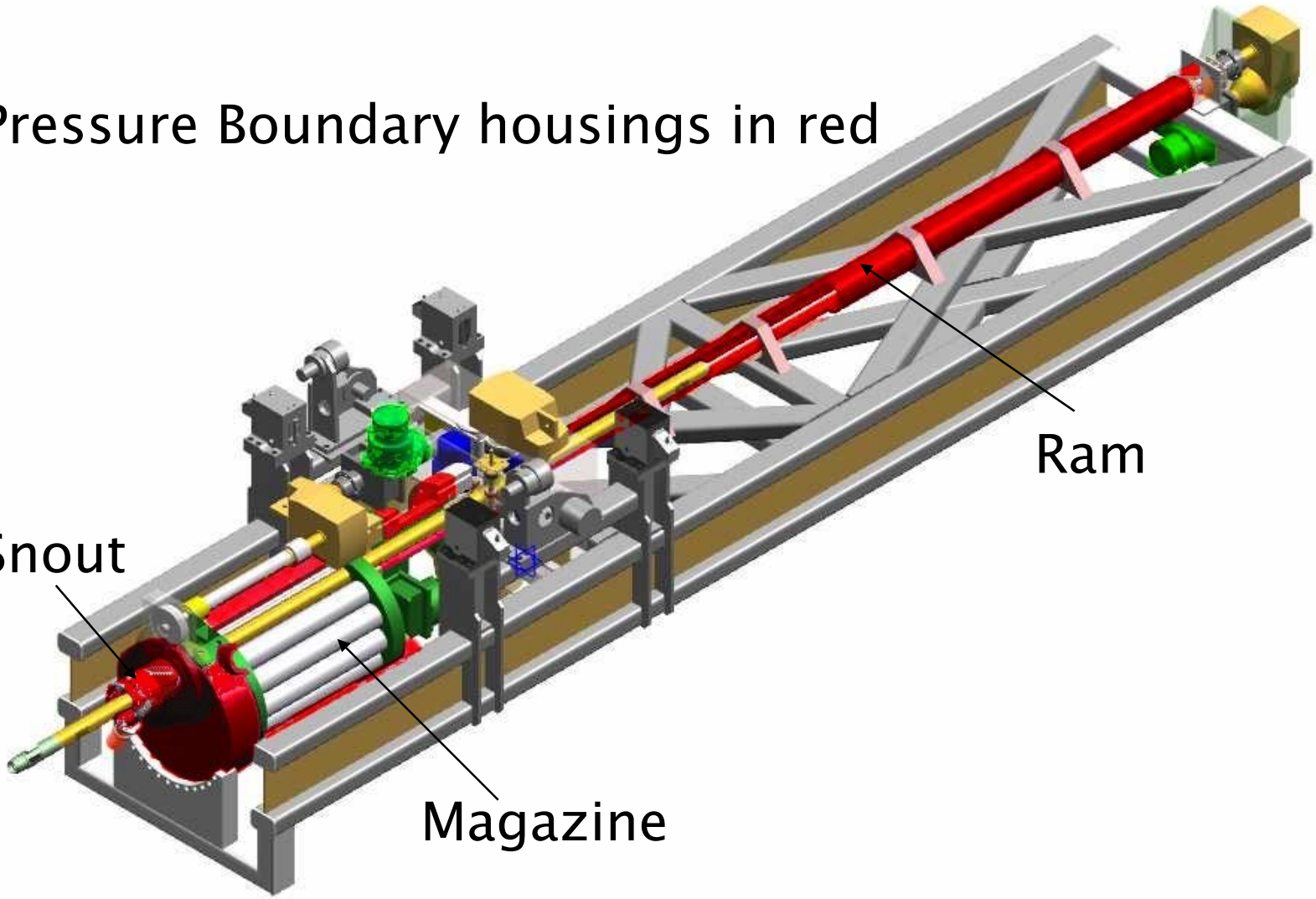

Fueling Machine

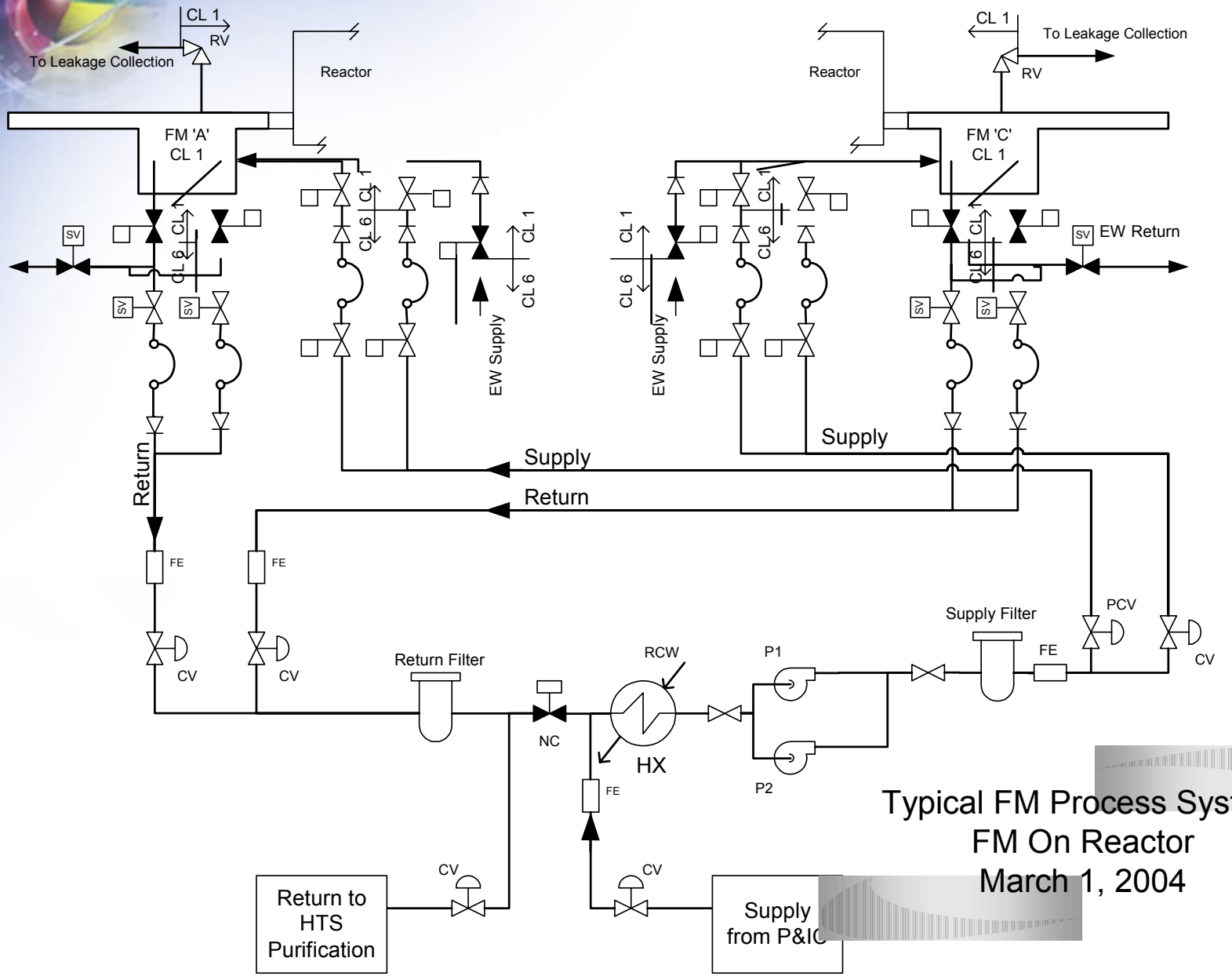

Typical FM Process System
FM On Reactor
March 1, 2004

Fueling Machine

Head Parts	Features	Notes
Pressure boundary shell	Conventional shell	Design to ASME III
Nozzle connections	Small diameter penetrations in boundary	Screw thread for small dia fittings allowed by past qualification
Tubing	Small Bore tubing	Tube to ASME III, Swagelock fittings qualified
Catenaries / hoses	B31.1 equivalent reinforced elastomer hose	Qualified by manufacturing and design controls
Connection Lock	Mechanical pressure / spring activated	Extra feature to cover connection safety

Barriers to Inadvertent Release of FM from Reactor Channel

- FM snout-to-end-fitting clamping mechanism
- FM snout safety lock – engaged / locked by channel pressure
- Check for integrity of seal between FM snout and channel end fitting prior to removal of channel closure
- FM snout clamp interlocks on pressure and status of snout safety lock
- FM bridge drive / brake safety interlocks
- Limited force of carriage drives
- Check for partial blockage of channel prior to installing channel closures
- Check for integrity of seal between channel closure end fitting prior to unclamping of FM snout

Design Features to Enhance Safety During Fueling

- The principal safety features related to CANDU fueling are well proven and are designed according to recognized standards
- Pressure boundary components are designed to established piping and pressure vessel codes
- Key specialized materials and design features are governed by Canadian Standards Association (CSA) codes
- Additional interlocks, mechanical locks and backup systems are incorporated to enhance safety and operability
- Inherent benefit in reduction of reactor coolant system (RCS) activity from defective fuel bundles due to early detection / removal

Design Features to Enhance Safety During Fueling

- Latching snout connection mechanism and additional safety locks to prevent unintentional or unsafe release from a fuel channel
- Controls and instrumentation that are required to function properly during and following a Design Basis Earthquake (DBE), LOCA or MSLB are seismically and environmentally qualified
- A seismically and environmentally qualified emergency water system is included to maintain fuel cooling when the FM is off reactor during and following a DBE, LOCA or MSLB or if the normal system becomes unavailable
- Special stainless steel baskets guarantee sub-criticality of the fuel in all mediums

CANDU Specific Features

- Fuel Channel
  - Roll Joints
  - Pressure tubes
  - Channel Closure interfaces
- Calandria
  - Roll Joints
  - Lattice tubes
- RCUs
  - Pressure boundary
  - Nozzle Joints
- Tube Joints
- Fuel Handling Equipment
  - Hoses
  - Channel closure locks/ interlocks
  - Channel connection locks/ interlocks
  - Supports
  - Threaded Connections

AECL

TECHNOLOGIES INC.