308 - - - Q199702060017
Scientific Notebooks No. 017: Seismic Rock Mechanics Research Project--Groundwater Hydrology Field Studies and Code Validation (10/17/1990 through 01/23/1997)

21
300
REC.

CNWRA
CONTROLLED
COPY 17

9197020600 17

Seismic Rock Mechanics Research Project

TASK 5 – Groundwater Hydrology Field Studies and Code Validation

Principal Investigator – Simon Hsiung (SwRI-20)
Task staff – Steve McKinnon (Itasca)
– Wilson Blake (Consultant)
– S. W. Vanzant (SwRI-04)
– Mikko Ahola (SwRI-20)
– R. Ababou (SwRI-20)
– A. H. Chowdhury (SwRI-20)

Experimental Objectives (From Seismic Rock Mechanics Research Project Plan)

2.2.5 *Task 5 – Groundwater Hydrology Field Studies and Code Validation*

OBJECTIVE

The purposes of conducting field studies of seismic effects on geohydrologic response of jointed and fractured rock are to clarify and quantify the relation between seismically-induced ground motion and changes in groundwater conditions, to generate a reliable data set for a particular site expressing this relation, and to evaluate analytical methods for simulation of the effects of seismic activity on groundwater hydrology.

2.2.5.2 *Equipment Installation and Site Observation*

Rockburst-prone mine sites are well-equipped with mine-wide seismic detection transducers connected to suitable data logging equipment. Therefore, the only major instrumentation required for a seismic/hydrologic field study is an array of piezometers designed to intersect the principal hydraulic features in the host rock mass. Such equipment may be purchased off the shelf. Capped exploration or geophone boreholes may be used for installation of piezometers. The array may be linked to a data logging system to provide for continuous data collection and transmission.

Sui-Min Hsiung

Borehole Drilling

The borehole planned for piezometer installation was an NQ sized (≈ 3 in. in diameter) hole at the 5700 level of Lucky Friday Mine. The hole was drilled toward S16°E direction with a 20° dipping from horizontal plane. Drilling of the borehole was performed by Fausett Diamond Drilling Co. A HAGBY ONRAM 1000 drill was used for drilling. The feed pressure for drilling was 100 ~ 150 bar. Core was recovered after every 4 to 5 ft. of advance. The recovered was placed in a paper core box which contained five columns with each column 2 ft. long. Drilling information regarding project name, hole number, distance of drilling, and number of box was recorded on the box. The project name and hole no. assigned for the borehole were the current CNWR and 57-73, respectively. A wooden block marked with the depth of the borehole was placed at the end of the core after each core recovery. An NQ sized diamond bit made by Longyear was used for drilling. Drilling started on 10/17/90. Sw

10/17/90 A total of 28 ft was drilled. Core was fully recovered. Sw

10/18/90 A total of 50 ft was drilled and we has 100% of core recovery. Sw

10/19/90 Driller did not report to work. Sw

10/22/90 A total of 20 ft was drilled. Although core was fully recovered, it was highly fractured. The crew was asked to stop drilling after four hours of work because a transformer for the hoist at the Silver Shaft was broken down the previous Saturday (10/20/90) and needed ~~under~~ repairment. Sw 10/22/90 In order to repair the transformer, the hoist had to be shut down. This hoist provided main access to the 5700 level. Sw

10/23/90 Twenty five feet of drilling were performed. Most core recovered was highly fractured. HAGBY ONRAM 1000 is a wireline drill. ~~which~~ Core barrel can be retrieved using wireline with drill rods still in place. Considerable time-saving is achieved by using this type of drill, especially for drilling long holes. However, for the drill currently used, wireline failed to function properly. Sw

10/24/90 Twenty five feet of drilling were performed. Core recovered below 130 to 134 ft. indicated a relatively better rock condition. Drill mud was used to reduce friction between drill rods and borehole wall. The function of the wireline was fixed by replacing a faulted overshot, a device for

catching core barrel at the bottom of a hole. However, another problem associated with pushing the retrieved core barrel back to the hole bottom was found. As a result, drill rods had to be pulled out for the core barrel to be emplaced in the right position. The problem of the inability of pushing core barrel back canceled the advantage of wireline retrieving. Sw

Sw 10/25/90 Thirty four feet were drilled. Drilling started entering a fractured zone.

MK 10/26/90 VERY HARD GROUND WAS ENCOUNTERED AND ONLY 15 FEET OF DRILLING WAS PERFORMED. THE BEAM 20 PUMP WAS TO BE REPLACED BY A BEAM 35 PUMP. MK

10/29/90 TWELVE FEET WERE DRILLED IN VERY HARD QUARTZITE. WIRELINE KEPT BREAKING SO REPLACED WIRELINE CABLE. MK

10/30/90 FOURTEEN FEET WERE DRILLED. ROCK SOFTER AS APPARENTLY ENTERING A FRACTURED ZONE AT END OF HOLE. TRUBLE WITH ROTATION. MK

10/31/90 THIRTY FEET WERE DRILLED IN QUARTZITE WITH SOME SOFT ROCK ZONES. ROD LUBE ALLOWED BETTER ROTATION AND ABLE TO DRILL WITH LESS PRESSURE. MK

11/01/90 THIRTY ONE FEET WERE DRILLED IN FIRM BUT BROKEN UP ROCK. MK

11/02/90 ONLY SIXTEEN FEET WERE DRILLED IN EXTRA HARD QUARTZITE MK

11/05/90 TWENTY NINE FEET WERE DRILLED. ROD LUBE WAS USED TO OVERCOME HIGH TORQUE. MK

11/12/90 TWENTY THREE FEET WERE DRILLED (CREW WAS SICK, MISSED 4 DAYS). MK

11/13/90 TWENTY SIX FEET WERE DRILLED. MK

11/14/90 SIXTY FIVE FEET WERE DRILLED ON TWO SHIFTS (STARTED DOUBLE SHIFT) MK

11/15/90 THIRTY NINE FEET WERE DRILLED ON TWO SHIFTS. MK

11/16/90 FORTY THREE FEET WERE DRILLED ON TWO SHIFTS. MK

11/19/90 THIRTY ONE FEET WERE DRILLED ON TWO SHIFTS. MK

11/20/90 TWENTY FIVE FEET WERE DRILLED ON TWO SHIFTS – ROCK HARD. MK

11/21/90 FOUR FEET WERE DRILLED IN VERY HARD ROCK ON ONE SHIFT. MK

11/26/90 TWENTY SEVEN FEET WERE DRILLED ON TWO SHIFTS. MK

11/27/90 THIRTY TWO FEET WERE DRILLED ON TWO SHIFTS. MK

11/28/90 TWENTY FOUR FEET WERE DRILLED ON TWO SHIFTS. MK

11/29/90 EIGHTEEN FEET WERE DRILLED ON TWO SHIFTS. MK

11/30/90 THIRTY TWO FEET WERE DRILLED ON TWO SHIFTS. HOLE IS NOW 718 FEET FROM COLLAR. MK

12/03/90 THIRTY SEVEN FEET WERE DRILLED ON 2 SHIFTS. MK
12/04/90 THIRTY SIX FEET WERE DRILLED ON 2 SHIFTS. MK
12/05/90 THIRTY ONE FEET WERE DRILLED ON 2 SHIFTS. MK
12/06/90 THIRTY ONE FEET WERE DRILLED ON 2 SHIFTS. MK
12/07/90 THIRTY FIVE FEET WERE DRILLED ON 2 SHIFTS. OWING TO PRESENT RATE AND THE NUMBER OF SHIFTS REMAINING BEFORE INSTRUMENTATION CAN BE INSTALLED IN FIRST PART OF JANUARY 1991 IT WAS DECIDED TO GO TO ONE SHIFT DRILLING PER DAY. MK
12/10/90 TWELVE FEET WERE DRILLED ON ONE SHIFT. HOLE DEPTH WAS 900 FEET AT END OF SHIFT. MK
12/11/90 TWENTY THREE FEET WERE DRILLED. HOLE MAKING FIVE GALLONS PER MINUTE WATER, BETTER DRILLING CONDITIONS. MK
12/12/90 ONLY EIGHT FEET WERE DRILLED AS HOLE SQUEEZING ON RODS CAUSING RODS TO BE STUCK. MK
12/13/90 TWELVE FEET WERE DRILLED, AND NECESSARY TO REAM BACKWARDS AND FORWARDS THROUGH SQUEEZING ZONE. MK
12/14/90 SIXTEEN FEET WERE DRILLED IN HOLE, DRILLING WAS EASIER WITHOUT SQUEEZING. MK
12/17/90 FIFTEEN FEET WERE DRILLED ON ONE SHIFT. MK
12/18/90 TWENTY FEET WERE DRILLED. MK
12/19/90 FIFTEEN FEET WERE DRILLED. MK
12/20/90 FIFTEEN FEET WERE DRILLED. MK
12/21/90 SEVEN FEET WERE DRILLED, EQUIPMENT PROBLEM WITH BOLTS HOLDING CYLINDER TO FRAME. MK
12/26/90 FIVE FEET WERE DRILLED, FINISHED CYLINDER REPAIR. MK
12/27/90 FIFTEEN FEET WERE DRILLED. MK
12/28/90 TWELVE FEET WERE DRILLED, ROCK GETTING HARDER. MK
12/29/90 SEVEN FEET WERE DRILLED OWING TO HARD ROCK AND SLOW ROTATION. MK
12/31/90 ONLY SIX FEET WERE DRILLED, CHANGED BITS, VERY SLOW DRILLING MK
1/2/91 EIGHTEEN FEET WERE DRILLED AS ROCK SOFTER. MK
1/3/91 FIFTEEN FEET WERE DRILLED. MK
1/4/91 SIXTEEN FEET WERE DRILLED. MK
1/7/91 ONLY 10 FEET WERE DRILLED, BROKE ROD. MK

1/8/91 ONLY THREE FEET WERE DRILLED AS SURVEYED HOLE. MK
1/9/91 SEVENTEEN FEET WERE DRILLED. MK
1/10/91 FIFTEEN FEET WERE DRILLED. MK.
1/11/91 HOLE ENDED AT 1170 FEET. PULLED RODS SO CAN PUT INSTRUMENTS IN HOLE. MK.
1/14/91 START PUTTING INSTRUMENTS - SEISMIC GAGE AND PIEZOMETERS - IN HOLE. MK.
1/15/91 PUTTING INSTRUMENTS AND PACKER STRING IN HOLE. MK
1/16/91 PUTTING INSTRUMENTS AND PACKER STRING IN HOLE. MK
1/17/91 PUTTING INSTRUMENTS AND PACKER STRING IN HOLE. MK
1/18/91 FINISH PUTTING INSTRUMENTS AND PACKER STRING - SOME 340 FEET - IN HOLE. MK
1/21/91 PUT 540 FEET OF PUSH RODS IN HOLE. MK
1/22/91 FINISH PUTTING LAST 75 FEET OF PUSH RODS IN HOLE. INSTRUMENTS AND PACKERS AT PLANNED POSITIONS. ATTACHED RODS TO HOLE COLLAR ASSEMBLY. MK
1/23/91 PUT CABLES IN CONDUIT FROM HOLE TO INSTRUMENT BOXES.
9/22/94

9/22/94

Pages 1 through 5 of this Scientific Notebook were reviewed for compliance with QAP-001 in response to Corrective Action Request 94-02. Corrections and clarifications were made as appropriate. In some cases, the date of a change will reflect the date of this review rather than the date of the original Scientific Notebook entry.

Randy Falck

Sui-Min Hsi 1/8/97

1/8/97

10 DEC '90

POSITIONING OF CHAMBERS

- all zone chambers to be placed immediately below a packer, except for the inflation line chamber of the top packer set

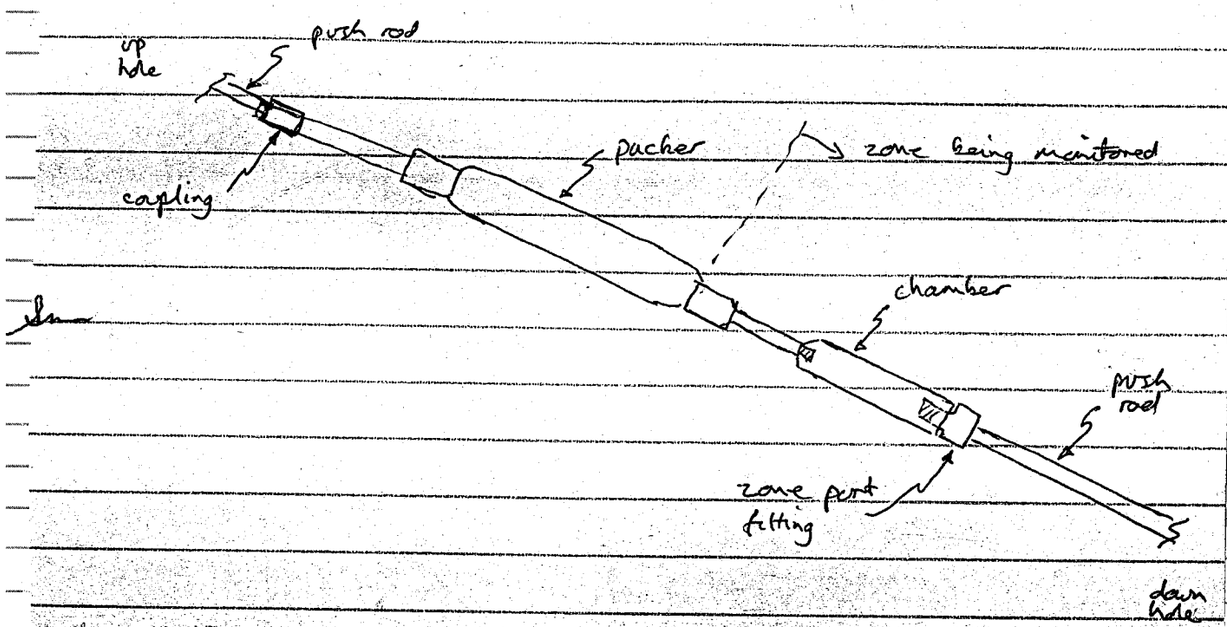

- at the top packer, the packer inflation lines are connected in a chamber immediately on top of the top packer. The top packer inflation line (stainless steel tube) must be cut to make the connection inside the chamber.

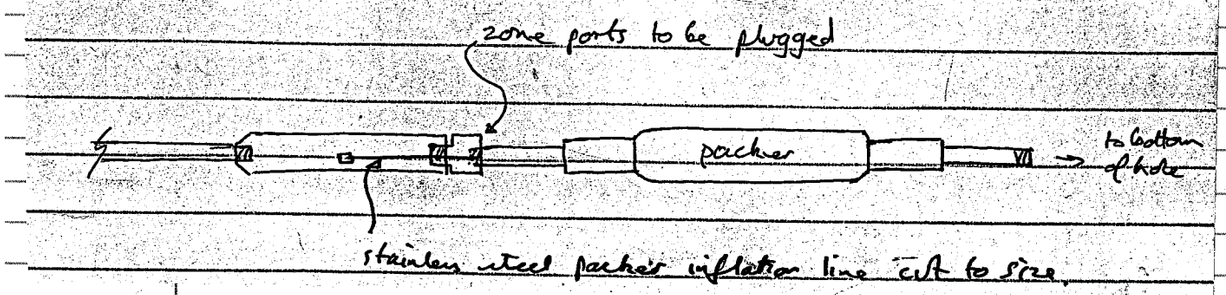

1/8/97

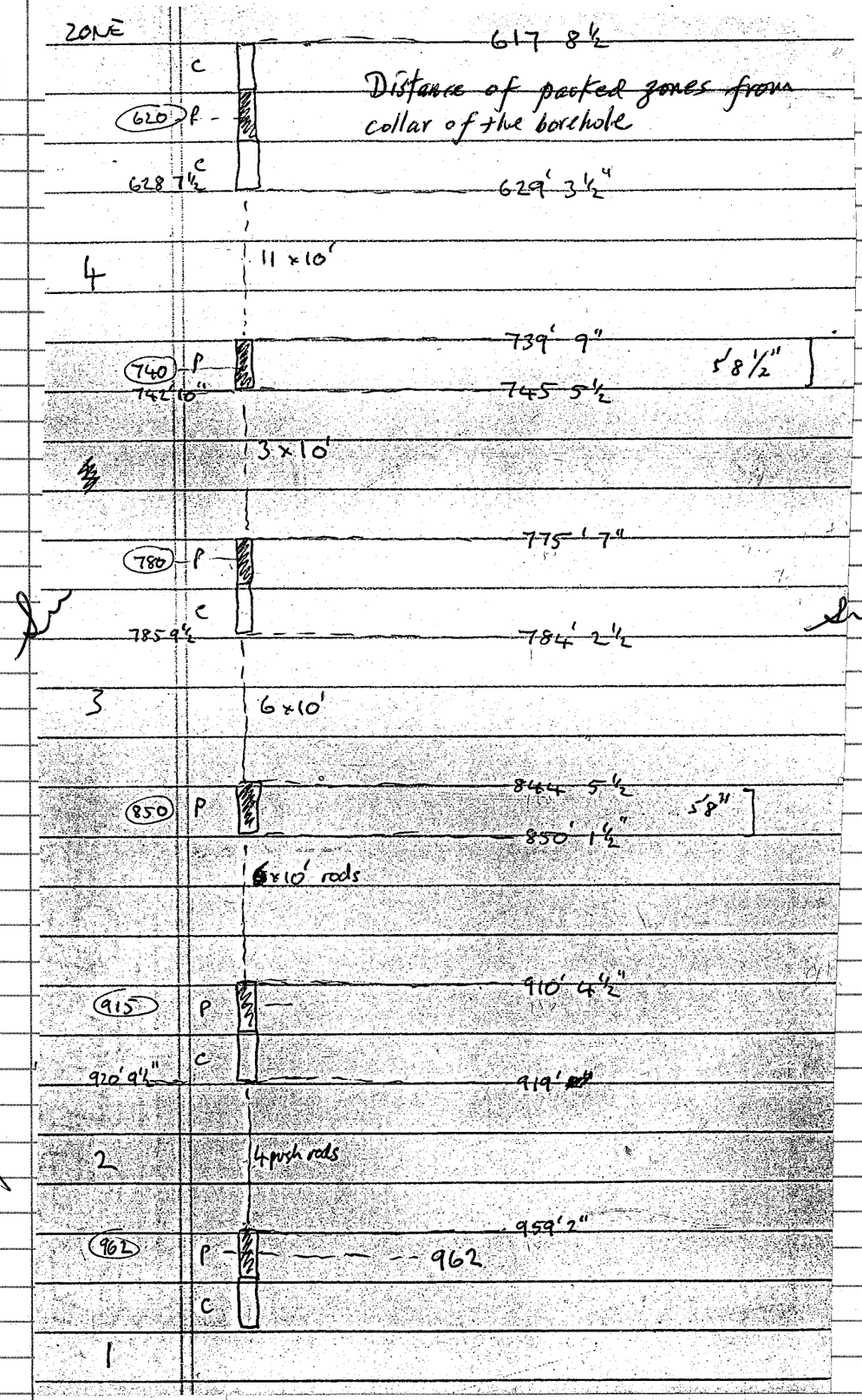

1/8/97

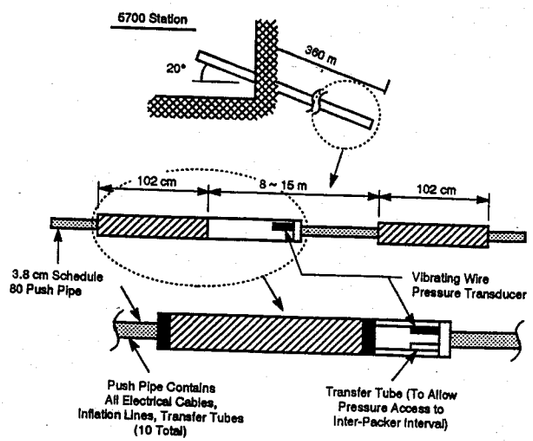

Schematic drawing of straddle packer pair with piezometer enclosure

1/8/97

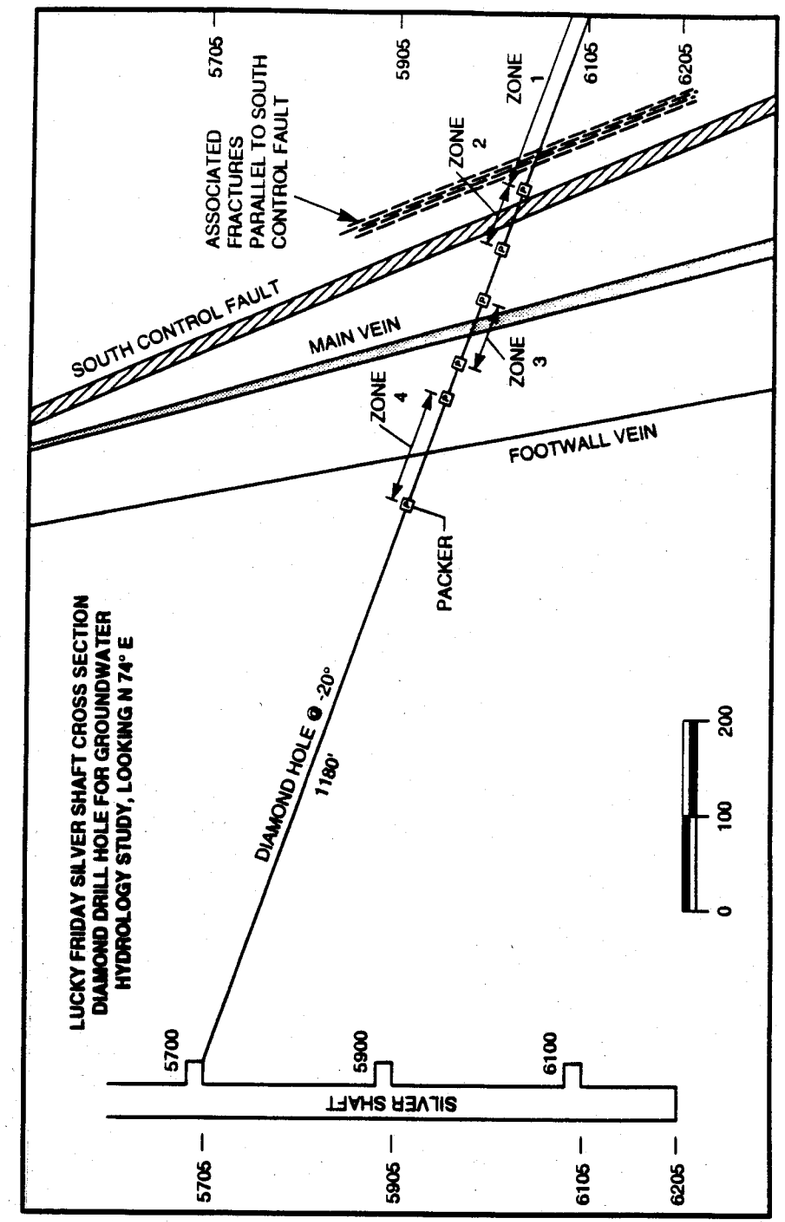

PIEZOMETER HOLE DRILLED FROM 5700 LEVEL AND AREAS PACKED OFF FOR WATER CHANGE MEASUREMENT

1/8/97

Jim Mine

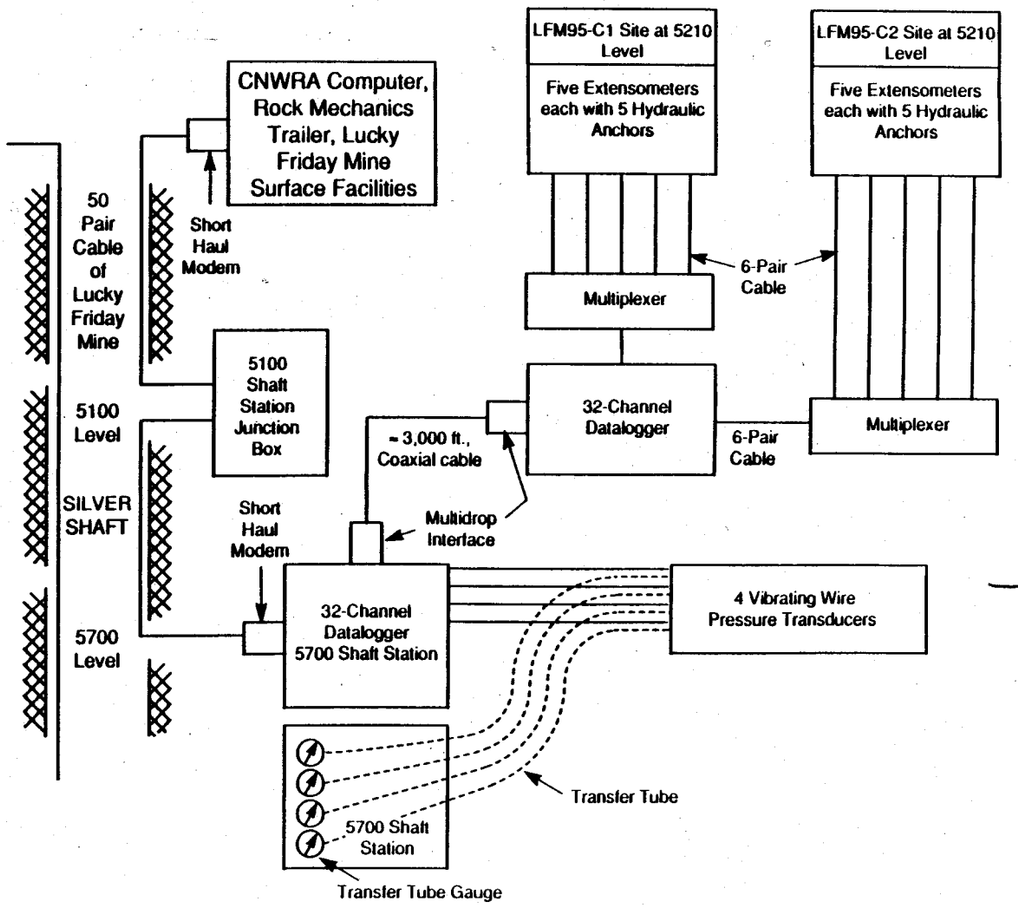

SCHEMATIC DIAGRAM OF EXTENSOMETER AND PIEZOMETER DATA ACQUISITION SYSTEM

This scientific notebook deals with the drilling & instrumentation for groundwater hydrology field studies at Lucky Friday Mine.

I have reviewed this scientific notebook & find it in compliance with SAP-01.

1/23/97