308 - - - Q200311210001

Scientific Notebook # 130: Investigations to Determine the Important Radionuclides for Tracking Transport and Dose Assessment (01/13/1995 through 03/03/1997)

21
150

R

The Boorum & Pease® Quality Guarantee

The materials and craftsmanship that went into this product are of the finest quality. The pages are thread sewn, meaning they're bound to stay bound. The inks are moisture resistant and will not smear. And the uniform quality of the paper assures consistent rulings, excellent writing surface and erasability. If, at any time during normal use, this product does not perform to your expectations, we will replace it free of charge. Simply write to us:

Boorum & Pease Company
71 Clinton Road, Garden City, NY 11530
Attn: Marketing Services

Any correspondence should include the code number printed at the bottom of this page as well as the book title stamped at the bottom of the spine.

CNWRA
CONTROLLED
COPY 130

One Good Book Deserves Many Others.

Look for the complete line of Boorum & Pease® Columnar, Journal, and Record books. Custom-designed books also available by special order. For more information about our Customized Book Program, contact your office products dealer. See back cover for other books in this series.

Made in U.S.A.
RMI 300394

1/13/95 TITLE: AN UPDATED ASSESSMENT OF THE KEY RADIONUCLIDES (KEY RADIONUCLIDES)

NAMES OF INDIVIDUALS PERFORMING THEORETICAL RESEARCH:

MARK S. JARZEMBA

DAVID PICKETT

OBJECTIVES: TO DETERMINE WHICH RADIONUCLIDE ARE IMPORTANT FOR TRACKING THE TRANSPORT OF AND DOSE ASSESSMENT OF FOR NRC-IPA 3

PROCEEDURE: TO BE DETERMINED AS A PART OF THE PROJECT THROUGH LITERATURE SEARCH OF OTHER DOCUMENTS (SUCH AS OTHER TSPA'S) AND ANALYTICAL INVESTIGATIONS.

DATA AND INFORMATION SOURCES:

1) - KERRISK, J.F. - "AN ASSESSMENT OF THE IMPORTANT RADIONUCLIDES IN NUCLEAR WASTE", LA-10414-MS, 1985

2) - DUGUID, J.O., ET. AL. - "CALCULATIONS SUPPORTING EVALUATION OF POTENTIAL ENVIRONMENTAL STANDARDS FOR YUCCA MOUNTAIN", INTERA, INC., APRIL 1994.

3) - "INVENT" MANUAL - CNWRA 94-016

4) - YU, C., ET. AL. - "MANUAL FOR IMPLEMENTING RESIDUAL RADIOACTIVE MATERIAL GUIDELINES USING RESRAD, VERSION 5.0", ANL/EAD/LD-2, 1993.

5) - DOE/EH 0071

6) - DOE/EH 0070

1/24/95 KEY RADIONUCLIDES: LITERATURE SEARCH

MSJ

- THE LISTS OF KEY RADIONUCLIDES THAT OTHERS HAVE USED ARE AS FOLLOWS: (NOTE - AQUEOUS TRANSPORT ONLY)

I.) SANDIA NATIONAL LABS - TSPA-93 (SAND 93-2675)

1) ^{239}Pu
2) ^{237}Np
3) ^{234}U
4) ^{231}Pa
5) ^{129}I
6) ^{99}Tc
7) ^{79}Se
8) ^{14}C

II.) NRC IPA-2 (YET UNPUBLISHED)

1) ^{240}Pu
2) ^{237}Np
3) ^{243}Am
4) ^{210}Pb
5) ^{129}I
6) ^{99}Tc
7) ^{14}C
8) ^{238}U
9) ^{234}U
10) ^{239}Pu
11) ^{246}Cm
12) ^{245}Cm
13) ^{241}Am
14) ^{226}Ra
15) ^{210}Pb
16) ^{230}Th
17) ^{137}Cs
18) ^{94}Nb
19) ^{79}Se
20) ^{59}Ni

III) PNL (PNL-8444)

1) ^{243}Am
2) ^{239}Pu
3) ^{237}Np
4) ^{234}U
5) ^{135}Cs
6) ^{129}I
7) ^{126}Sn
8) ^{99}Tc
9) ^{79}Se
10) ^{14}C

IV) EPRI - PHASE 2 (TR-100384)

1) ^{242}Pu
2) ^{240}Pu
3) ^{239}Pu
4) ^{237}Np
5) ^{238}U
6) ^{235}U
7) ^{234}U
8) ^{226}Ra
9) ^{135}Cs
10) ^{129}I
11) ^{99}Tc
12) ^{79}Se
13) ^{14}C

V) INTERA INC. - APRIL '94 REPORT

1) ^{242}Pu
2) ^{238}U
3) ^{236}U
4) ^{235}U
5) ^{234}U
6) ^{233}U
7) ^{237}Np
8) ^{231}Pa
9) ^{232}Th
10) ^{230}Th
11) ^{229}Th
12) ^{227}Ac
13) ^{226}Ra
14) ^{210}Pb
15) ^{135}Cs
16) ^{129}I
17) ^{126}Sn
18) ^{99}Tc
19) ^{94}Nb
20) ^{79}Se
21) ^{14}C

- THE INTERA GROUP DID DOSE CALCULATIONS FOR THEIR LIST OF 21 RADIONUCLIDES FOR THE BASELINE CASE AT YUCCA MOUNTAIN (IE. PRESENT DAY CONDITIONS PERSIST INFINITELY). A TRUNCATED LIST OF RADIOISOTOPES WHOSE MAXIMUM CALCULATED EFFECTIVE DOSE EQUIVALENT RATE FOR A PERSON AT THE ACCESSABLE ENVIRONMENT WAS GREATER THAN 10^{-8} SV/YR (~~50~~ 0.001 mREM/YR) IS PRESENTED HERE: MJ 1/30/95

V)* 1) ^{237}Np
2) ^{233}U [1]
3) ^{229}Th [1]
4) ^{135}Cs
5) ^{129}I
6) ^{99}Tc
7) ^{79}Se
8) ^{14}C
~~9)~~

[1] - INDICATES DAUGHTER OF ^{237}Np - (MARGINAL DOSE AT BEST)

- COMPILED LIST

THE COMPILED LIST IS FROM V*) ABOVE PLUS ANY RADIONUCLIDES THAT WERE NOT ON V) BUT WERE ON LISTS I) - IV).

1) ^{240}Pu
2) ^{239}Pu
3) ^{243}Am
4) ^{237}Np
5) ^{233}U [1]
6) ^{229}Th [1]
7) ^{135}Cs
8) ^{129}I
9) ^{99}Tc
10) ^{79}Se
11) ^{14}C

PROPOSED PLAN OF ACTION 1) THE COMPILED LIST WILL BE LOOKED AT IN DEPTH ANALYTICALLY TO DETERMINE THE FINAL LIST OF KEY RADIONUCLIDES.

PROPOSED PLAN OF ACTION 2) A NEW "COMPILED LIST" FORMED OF ALL ISOTOPE ON LISTS I) – IV) COULD BE LOOKED AT IN DEPTH ANALYTICALLY TO DETERMINE THE FINAL LIST OF KEY RADIONUCLIDES. THIS LIST WOULD TAKE NO CREDIT FOR INTERA'S WORK.

DECISION: GO WITH PLAN 1), THE SCOPE OF THIS PROJECT IS NOT LARGE ENOUGH TO REDO WORK OTHERS HAVE DONE (IN ESSENSE, PROVIDE A CHECK OF INTERA'S WORK)

1/13/95 KEY RADIONUCLIDES: DEVELOPMENT OF IMPORTANCE INDEX FACTOR

MSJ

$$F_i = \text{INVENT}_{MAX_i}[Ci] \cdot \text{FRACTIONAL DISS. RT}_i[1/YR] \cdot \text{EXP}\left\{-\frac{LN2}{t_{1/2_i}} \cdot R_{F_i} t_w\right\} \cdot \text{VOLUMETIC FLOW RT}^{-1}[YR/\ell] \cdot \sum_P DCA$$

THEORY: F_i CONVERTS TO A MAXIMUM DOSE INCURRED [CEDE] 1/24/95 BY AN INDIVIDUAL THAT OCCURS AT A TIME $(t_{MAX} + R_{F_i} t_w)$ AFTER ENTOMBMENT

WHERE:

INVENT_{MAX_i} = THE MAXIMUM REPOSITORY INVENTORY OF RADIONUCLIDE i OCCURRING AT A TIME t_{MAX} (IN Ci) = I_{MAX_i}

FRACTIONAL DISS. RT$_i$ = THE FRACTIONAL DISSOLUTION RATE FOR ISOTOPE i IN (1/YR) = DR_i

$t_{1/2_i}$ = ISOTOPE HALF LIFE IN (YEARS)

R_{F_i} = RETARDATION FACTOR FOR ISOTOPE i

t_w = GROUNDWATER TRAVEL TIME (YRS)

VOLUMETRIC FLOW RATE^{-1} = THE INVERSE OF THE VOLUMETIC FLOW RATE THROUGH THE REPOSITORY = $1/(94.3\ m^3/YR)$

FROM INTERA, 4/94 REPORT p. 2-14

$$1/V_F = 1/(9.43\times10^{4}\ \ell/YR) = 1.1\times10^{-5}\ YR/\ell$$

$\sum_P DCA$ = DOSE CONVERSION ANALYSIS SUMMED FROM 1 TO P PATHWAYS

$$F_i = I_{MAX_i} \cdot DR_i\ \text{EXP}\left[-\frac{LN2}{t_{1/2_i}} R_{F_i} t_w\right] \cdot (1/V_F) \cdot \sum_P DCA$$

1/13/95 KEY RADIONUCLIDES: DOSE CONVERSION ANALYSIS (DCA) - DATA AND ASSUMPTIONS

ASSUMPTIONS:

THE ASSUMPTIONS MADE FOR DCA ARE VERY IMPORTANT TO THE VALUE OF THE RESULTS. FOR EXAMPLE, ARE EXPOSURES GOING TO BE CALCULATED FOR FAMILY FARM? (SELF-SUFFICIENT?), MAXIMUM EXPOSED INDIVIDUAL? CUMMULATIVE DOSE? IN LIGHT OF RECENT CONGRESSIONAL ACTIVITY (CONGRESSIONAL RECORD - SENATE, JAN 5, 1995, p S498) THE DOSE CALCULATION SHOULD FOCUS ON THE AVERAGE ANNUAL DOSE COMMITMENT FOR AN INDIVIDUAL IN A MAXIMUMLY EXPOSED POPULATION IN THE VICINITY OF YUCCA MOUNTAIN.

[NOTE: CONGR. RECORD STATES: AVERAGE ANNUAL DOSE A POPULATION MEMBER IN VICINITY OF YUCCA MOUNTAIN NOT TO EXCEED 1/3 U.S. ANNUAL AVERAGE NATURAL BACKGROUND]

THEREFORE, DOSE CONVERSION ANALYSIS WILL ASSUME:

(1) THE 9.43×10^4 ℓ/YR OF GROUNDWATER FLOWING THROUGH THE REPOSITORY IS DILUTED WITH THE 2200 ACRE-FEET ($= 2.75 \times 10^9$ ℓ/YR) OF ANNUAL RECHARGE IN THE AREA[1]

(2) CURRENT USE ESTIMATES[2]

(i) 200 ACRE-FEET (2.5×10^8 ℓ/YR) USED IN AREA OF YUCCA MOUNTAIN
(ASSUME HOUSEHOLD USE - 2.07×10^5 ℓ/YR/PERSON)

(ii) 2000 ACRE-FEET USED IN AREA OF JACKASS FLATS (2.5×10^9 ℓ/YR)
(ASSUME HOUSEHOLD - FARM = 1.8×10^7 ℓ/YR/PERSON)
20,000 m²/PERSON (ARID CLIMATE, RICHLAND)
150 ℓ/m²/MO (IRRIGATION)
6 MO. (GROWING SEASON - ARID CLIMATE, RICHLAND)

1- INTERA REP, DUGUID, ET AL p A-4 TABLE A-1, ORIGINALLY FROM CZARNECKI, JB. 1985

2- INTERA REP. DUGUID ET. AL. p A-4 TABLE A-2

1/13/95 KEY RADIONUCLIDES: DOSE CONVERSION ANALYSIS (DCA) - ANALYSIS

MST

(1) CRITICAL POPULATION: MADE UP OF TWO GROUPS

a) YUCCA MOUNTAIN IMMEDIATE AREA, HOUSHOLD - (2.5×10^8 ℓ/YR)

\# PEOPLE = 2.5×10^8 ℓ/YR / 2.07×10^5 ℓ/YR/PERSON = 1,208 PEOPLE

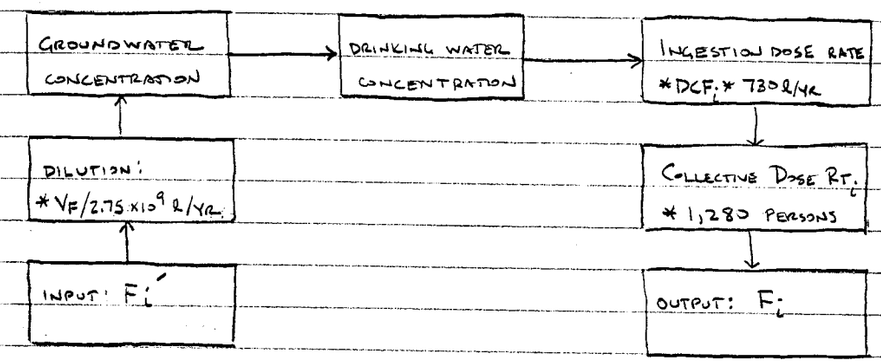

$$F_i' = I_{MAX_i} \, DR_i \, \exp\left[\frac{-\ln 2}{t_{1/2_i}} R_{F_i} t_w\right] \cdot (1/V_F)$$

b) Farmers in Jackass Flats; household-farm.

UH-OH; calculating doses other than drinking water dose is not analytically easy, (beyond timescale of this project). Will only calculate drinking water dose for Jackass Flats as well. [Possible scope for future work would be to enhance DCA].

$$\#\,\text{people} = \frac{2.5\times10^{9}\ \ell/\text{yr}}{1.8\times10^{7}\ \ell/\text{yr}/\text{person}} = 139\ \text{people}$$

Analysis = same as previous page.

1/24/95 MSJ

Key Radionuclides: Calculation of Importance Indices

^{14}C | $R_F = 1$ (Intera, 1994)

$t_{1/2} = 5730\,y$ (Radiological Health Handbook, 1970)

$$DR = \frac{1}{\text{leach time}} = 10^{-4}\left(\frac{1}{yr}\right)\ \text{(Intera, 1994)}$$

$$= 10^{-3}\left(\frac{1}{yr}\right)\ \text{(Kerrisk, 1985)}$$

Use Kerrisk, 1985, ie. conservative.

$$DCF_{ING} = 2.1\times10^{-6}\ \frac{mREM}{pCi}\ \text{(DOE/EH 0071)}$$

$$I_{MAX} = 1.5\ Ci/MTHM \quad \text{(Invent, CNWRA 94-016)}$$

at $t_M = 0$

$$I_{MAX} = 1.5\frac{Ci}{MTHM}\cdot 70{,}000\ MTHM = 1.05\times10^{5}\ Ci$$

$$F_{C\text{-}14} = I_{MAX}[pCi]\cdot DR\left[\frac{1}{yr}\right]\cdot \exp\left[\frac{-\ln 2}{t_{1/2}}\cdot R_F\cdot t_w\right]\left(\frac{1}{9.43\times10^{4}\ \ell/yr}\right)\cdot$$

$$\left(\frac{9.43\times10^{4}\ \ell/yr}{2.75\times10^{9}\ \ell/yr}\right)\cdot DCF_{ING}\left[\frac{mREM}{pCi}\right]\cdot 730\left[\frac{\ell}{yr}\right]$$

t_w (yr)	$F_{C\text{-}14}$ $\left(\frac{mREM}{yr}\right)$	Time of occurance (yr)
10	58.5	10
100	57.8	100
1,000	51.9	1,000
10,000	17.5	10,000
25,000	2.9	25,000
100,000	3.6×10^{-4}	100,000

^{79}Se

$R_F = 25$ (INTERA, 1994)

$t_{1/2} = 6.5 \times 10^4$ YR (RADIOLOGICAL HEALTH HANDBOOK, 1970)

$DR = \frac{1}{\text{LEACH TIME}} = 10^{-4} \left(\frac{1}{YR}\right)$

$DCF_{ING} = 8.3 \times 10^{-6} \frac{mREM}{pCi}$ [MAX PER CHEMICAL FORM, DOE/EH 0071]

$I_{MAX} = 0.4$ Ci/MTHM [INVENT, CNWRA 94-016]

$\times$ 70,000 MTHM

2.8×10^4 Ci $= 2.8 \times 10^{16}$ pCi $\quad t_M = 0$

$F_{SE-79} = I_{MAX}[pCi] \cdot DR\left[\frac{1}{YR}\right] \cdot EXP\left[\frac{-LN2}{t_{1/2}} \cdot R_F \cdot t_W\right] \left(\frac{1}{9.43 \times 10^4 \ \ell/YR}\right) \cdot$

$\left(\frac{9.43 \times 10^4 \ \ell/YR}{2.75 \times 10^9 \ \ell/YR}\right) \cdot DCF_{ING} \cdot 730 \frac{\ell}{YR}$

t_W (YR)	F_{SE-79} ($\frac{mREM}{PYR}$)	TIME OF OCCURANCE
10	6.15	250
100	6.00	2,500
1,000	4.72	25,000
10,000	0.43	250,000
25,000	0.0078	625,000
100,000	1.6×10^{-11}	2,500,000

^{99}Tc

$R_F = 5$ (INTERA, 1994)

$t_{1/2} = 2.12 \times 10^5$ YR (RADIOLOGICAL HEALTH HANDBOOK)

$DR = 10^{-4} \left(\frac{1}{YR}\right)$ (INTERA, 1994)

$DCF_{ING} = 1.3 \times 10^{-6} \frac{mREM}{pCi}$ (DOE/EH 0071)

$I_{MAX} = 12$ Ci/MTHM (INVENT)

$\times$ 70,000 MTHM

8.4×10^{17} pCi

t_W (YR)	F_{T-99} ($\frac{mREM}{YR}$)	TIME OF OCCURANCE (YR)
10	29.0	50
100	28.9	500
1,000	28.5	5,000
10,000	24.6	50,000
25,000	19.3	125,000
100,000	5.65	500,000

1/25/95
MSJ

^{129}I

$R_F = 1$

$t_{1/2} = 1.7 \times 10^{7}$ YR

$DR = 10^{-4}$ ($\frac{1}{YR}$) (INTERA REPORT)

$= 10^{-3}$ ($\frac{1}{YR}$) (KERRISK, 1985)

USE KERRISK, 1985 (CONSERVATIVE)

$DCF_{ING} = 2.8 \times 10^{-4}$ $\frac{mREM}{pCi}$ (DOE/EH 0071)

$I_{MAX} = 0.03$ Ci/MTHM

* 70,000 MTHM

2.1×10^{3} Ci (INVENT, CNWRA 94-016)

$t_M = 0$

t_w (YRS)	F_{I-129} ($\frac{mREM}{YR}$)	TIME OF OCCURANCE (YR)
10	156.1	10
100	156.1	100
1,000	156.1	1,000
10,000	156.0	10,000
25,000	155.9	25,000 ~~25,000~~ MJ 1/30/95
100,000	155.4	100,000

^{135}Cs

$R_F = 150$ (INTERA, 1994)

$t_{1/2} = 3 \times 10^{6}$ YR

$DR = 10^{-4}$ ($\frac{1}{YR}$) (INTERA)

$= 10^{-3}$ ($\frac{1}{YR}$) (KERRISK, 1985)

USE KERRISK, 1985 (CONSERVATIVE)

$I_{MAX} = 0.33$ Ci/MTHM (INVENT)

* 70,000 Ci/MTHM

2.3×10^{4} Ci AT $t_M = 0$

$DCF_{ING} = 7.1 \times 10^{-6}$ $\frac{mREM}{pCi}$ (DOE/EH 0071)

t_w (YRS)	F_{CS-135} ($\frac{mREM}{YR}$)	TIME OF OCCURANCE
10	43.3	1,500
100	43.2	15,000
1,000	41.9	150,000
10,000	30.7	1.5×10^{6}
25,000	18.2	3.75×10^{6}
100,000	13.5	1.5×10^{7}

^{237}Np

$R_F = 16$ (INTERA REPORT)

$t_{1/2} = 2.14 \times 10^6$ YR

$D_R = 2 \times 10^{-4} \left(\frac{1}{YR}\right)$ (INTERA, 1994)

$= 10^{-4} \left(\frac{1}{YR}\right)$ (KERRISK, 1985)

USE KERRISK, 1985 (CONSERVATIVE); NUMBER IS SO MUCH HIGHER DUE TO UNCERTAINTIES IN Np SOLUBILITY.

$DCF_{ING} = 3.9 \times 10^{-3} \frac{mREM}{pCi}$ (DOE/EH 0071)

$I_{MAX} = 1$ Ci/MTHM (INVENT)

$\times 70{,}000$ MTHM

7×10^4 Ci AT $t_M = 1000$ YR

$^{245}Cm \xrightarrow{\alpha} {}^{241}Pu \xrightarrow{\beta} {}^{241}Am \xrightarrow{\alpha} {}^{237}Np$

$t_{1/2} = 9.3 \times 10^3$ YR $\quad t_{1/2} = 13$ YR $\quad t_{1/2} = 458$ YR

$R_F = 500 \quad R_F = 1820 \quad R_F = 1500$

- NEED TO ASSUME NEGLEDGIBLE TRANSPORT OF PARENT NUCLEI FOR THIS METHOD TO WORK. FROM ABOVE DIAGRAM:

Pu^{241} TRANSPORT NEGLEDGIBLE FOR $t_W \gtrsim 10$ YR

Am^{241} TRANSPORT NEGLEDGIBLE FOR $t_W \gtrsim 10$ YR

(SINCE $\frac{R_F t_W}{t_{1/2}} \cdot \ln 2 \gg 1$)

^{245}Cm

FOR ^{237}Np; ASSUME ALL ATOMS SURVIVE FOR MEAN LIFETIME $\tau = t_{1/2}/\ln 2 = 13{,}417$ YR

ASSUME DISTANCE TO WATER TABLE $\cong 200$ m

$\therefore$ TRANSPORT DISTANCE; $D(t_W) = V_W \left(\frac{1}{R_F}\right)\tau$

$= \frac{200\text{m}}{t_W}\left(\frac{1}{R_F}\right)\tau$

FIND t_W SUCH THAT $D(t_W) \lesssim 5$ m

$t_W \gtrsim 1{,}000$ YR

t_W	$F_{Np\text{-}237}$ $\left(\frac{mREM}{YR}\right)$	TIME OF OCCURANCE
10		1,160
100		2,600
1,000	7,209	17,000
10,000	6,880	161,000
25,000	6,366	401,000
100,000	4,316	1.6×10^6

^{233}U

$$^{237}Np \xrightarrow{\alpha} {}^{233}Pa \xrightarrow{\beta} {}^{233}U$$

$t_{1/2} = 2\times10^6$ YR $\qquad t_{1/2} = 27d$

$R_F = 16 \qquad R_F = 1500$

$R_F = 40$ (INTERA 1994)

$t_{1/2} = 1.6\times10^5$ YR

$DR = 1.6\times10^{-12}\ (\frac{1}{YR})$ (INTERA, 1994)

$= 7\times10^{-7}\ (\frac{1}{YR})$ (KERRISK, 1985)

USE INTERA, 1994 NUMBER SINCE IT IS A MORE RECENT ESTIMATE, IN EITHER CASE IT SEEMS THE ONLY WAY FOR ^{233}U TO MAKE IT TO THE ENVIRONMENT IS THROUGH ^{237}Np THAT IS IN ENV. AND DECAYS.

$DCF_{ING} = 2.7\times10^{-4}\ \frac{mREM}{pCi}$

- ASSUME SECULAR EQUILIBRIUM FOR $^{237}Np \rightarrow {}^{233}U$ IN THE ENVIRONMENT. TAKES APPROXIMATELY $3t_{1/2}$ TO ESTABLISH

$\therefore$ TIME OF OCCURANCE (^{233}U) = TIME OF OCCURANCE (^{237}Np) + $3t_{1/2}\ (^{233}U)$

tw	$F_{U\text{-}233}$ $(\frac{mREM}{YR})$	TIME OF OCCURANCE (YR)
10		
100		
1,000	499	497,000
10,000	476	641,000
25,000	440	881,000
100,000	298	2.1×10^6

DEFINE $F'_{NP\text{-}237}$ = A MEASURE OF THE MAXIMUM ACTIVITY CONCENTRATION IN THE GROUNDWATER AT THE ACCESSABLE ENVIRONMENT.

$$F'_{NP\text{-}237}(t_w = 1000\,YR) = I_{MAX} \cdot DR \cdot EXP\left[\frac{-LN2}{t_{1/2}} \cdot R_F \cdot t_w\right] \frac{1}{2.75\times10^6\ \ell/YR}$$

$$= 2532\ pCi/\ell$$

$F'_{NP\text{-}237} = F'_{U\text{-}233}$ (SECULAR EQUILIBRIUM)

$$F_{U\text{-}233}(t_w = 1000) = F'_{U\text{-}233}(t_w = 1000) \cdot DCF_{ING} \cdot 730\ \frac{\ell}{YR}$$

$$= 499\ \frac{mREM}{pCi}$$

THIS NUMBER IS WAY CONSERVATIVE SINCE THE $3t_{1/2}$ TO ESTABLISH SECULAR EQUILIBRIUM IS VERY LONG AND A LOT CAN HAPPEN IN THAT TIME TO BREAK THE EQUILIBRIUM ASSUMPTION. IT MIGHT BE MORE APPROPRIATE TO ASSUME A DISEQUILIBRIUM FACTOR HERE.

^{229}Th

$^{233}U \xrightarrow{\alpha} {}^{229}Th$

$t_{1/2} = 1.6 \times 10^5$ YR

$RF = 40$

SINCE THE ASSUMPTION THAT THE ONLY WAY ^{233}U GETS TO THE ACCESSABLE ENVIRONMENT IS THROUGH PARENT DECAYS (^{237}Np), THE SAME ASSUMPTION WILL BE MADE FOR ^{229}Th

$t_{1/2} = 7340$ YR

$DCF_{ING} = 3.5 \times 10^{-3} \frac{mREM}{pCi}$

ASSUME $F'_{U-233} = F'_{TH-229}$

$F_{TH-229} = F'_{TH-229} \cdot DCF_{ING} \cdot 730 \frac{l}{YR}$

tw	F_{TH-229} $\left(\frac{mREM}{YR}\right)$	TIME OF OCCURANCE
10		
100		
1,000	6,468	519,000
10,000	6,170	663,000
~~100~~ 25,000	5,703	903,000
100,000	3,862	2.1×10^6

^{243}Am

$RF = 1{,}500$ (INTERA, 1994)

$t_{1/2} = 7380$ YR

$DR = 1.2 \times 10^{-10} \left(\frac{1}{YR}\right)$ (INTERA, 1994)

$= 5 \times 10^{-7} \left(\frac{1}{YR}\right)$ (KERRISK, 1985)

USE KERRISK, 1985 (CONSERVATIVE)

$DCF_{ING} = 4.5 \times 10^{-3} \left(\frac{mREM}{pCi}\right)$ (DOE/EH 0071)

$I_{MAX} = 15$ Ci/MTHM (INVENT)

$* \underline{70{,}000 \text{ MTHM}}$ $t_M = 0$

1.05×10^6 Ci

$F_{AM-243} = I_{MAX}(pCi) \cdot DR\left(\frac{1}{YR}\right) \exp\left[\frac{-LN2}{t_{1/2}} \cdot RF \cdot t_W\right] \frac{1}{2.75 \times 10^9 \frac{d}{YR}} \cdot DCF_{ING} \cdot 730 \frac{l}{YR}$

tw (YR)	F_{AM-243} $\left(\frac{mREM}{YR}\right)$	TIME OF OCCURANCE
10	166	15,000
100	1.07×10^{-3}	150,000
1,000	1.3×10^{-45}	1.5×10^6
10,000	0	–
25,000	0	–
100,000	0	–

^{239}Pu

$^{243}Cm \xrightarrow{\alpha} {}^{239}Pu$

$t_{1/2} = 32\,YR$

$R_F = 500$

- ASSUME NEGLEDGIBLE TRANSPORT OF ^{243}Cm

$\tau = \frac{32}{LN2} = 46\,YR$

$t_w \tilde{>} \frac{200m}{5m}\left(\frac{1}{500}\right) 46\,YR = 3.68\,YR$

$F_{PU\text{-}238} = I_{MAX}(pCi) \cdot DR\left(\frac{1}{YR}\right) \cdot EXP\left[\frac{-LN2}{t_{1/2}} R_F \cdot t_w\right] \overline{2.75\times10^{9}\,\frac{l}{YR}} \cdot DCF_{ING} \cdot 730\,\frac{l}{YR}$

$R_F = 1820$ (INTERA, 1994)

$t_{1/2} = 2.4\times10^{4}\,YR$

$DR = 2\times10^{-7}$ (KERRISK, 1985)

$= 1.6\times10^{-10}$ (INTERA, 1994)

USE KERRISK, 1985 (CONSERVATIVE)

$DCF_{ING} = 4.3\times10^{-3}\,\frac{mREM}{pCi}$ (DOE/EH 0071)

$I_{MAX} = 30\,Ci/MTHM$ $t_H = 0$ (INVENT)

$= 2.1\times10^{6}\,Ci$

t_w (YRS)	$F_{PU\text{-}239}$ ($\frac{mREM}{pCi}$)	TIME OF OCCURANCE
10	283	18,200
100	2.5	182,000
1,000	7.1×10^{-21}	1.8×10^{6}
10,000	0	1.8×10^{7}
25,000	0	4.5×10^{7}
100,000	0	1.8×10^{8}

^{240}Pu

$^{244}Cm \xrightarrow{\alpha} {}^{240}Pu$

$t_{1/2} = 17.6\,YR$

$R_F = 500$

- ASSUME NEGLEDGIBLE TRANSPORT OF ^{244}Cm (SEE PREV. PAGE FOR ^{243}Cm)

$R_F = 1820$

$t_{1/2} = 6580$

$DR = 2\times10^{-7}$ (KERRISK, 1985)

$= 1.6\times10^{-10}$ (INTERA, 1994)

USE KERRISK, 1985 (CONSERVATIVE)

$DCF_{ING} = 4.3\times10^{-3}\,\frac{mREM}{pCi}$ (DOE/EH 0071)

$I_{MAX} = 500\,Ci/MTHM$ (INVENT) $t_M = 0$

$= 3.5\times10^{-7}\,Ci$

t_w (YR)	$F_{PU\text{-}240}$ ($\frac{mREM}{pCi}$)	TIME OF OCCURANCE
10	1,174	18,200
100	3.77×10^{-5}	182,00
1,000	0	-
10,000	0	-
25,000	0	-
100,000	0	-

- FROM THE PREVIOUS CALCULATIONS, IT CAN BE SEEN THAT GIVEN $t_W \gtrsim 100$ YR THE NEW LIST OF KEY RADIONUCLIDES SHOULD BE:

1) ^{237}Np
2) ^{233}U
3) ^{229}Th
4) ^{135}Cs
5) ^{129}I
6) ^{99}Tc
7) ^{79}Se
8) ^{14}C

1/26/95 MSJ

KEY RADIONUCLIDES – OTHER RADIONUCLIDES

^{238}U

$$^{246}Cm \xrightarrow{\alpha} {}^{242}Pu \xrightarrow{\alpha} {}^{238}U$$

$t_{1/2} = 5{,}500$ YR $\qquad t_{1/2} = 3.8\times10^{5}$ YR

$R_F = 500 \qquad R_F = 1{,}820$

^{246}Cm: $\tau = \dfrac{5{,}500}{\ln 2} = 7{,}934$ YR = MEAN LIFETIME

NEGLEDGIBLE TRANSPORT FOR:

$$t_W \gtrsim \frac{200\,m}{5\,m}\left(\frac{1}{500}\right) 5{,}500\,YR = 440\,YR$$

FOR $t_W \gtrsim 440$ YR TWO POSSIBILITIES

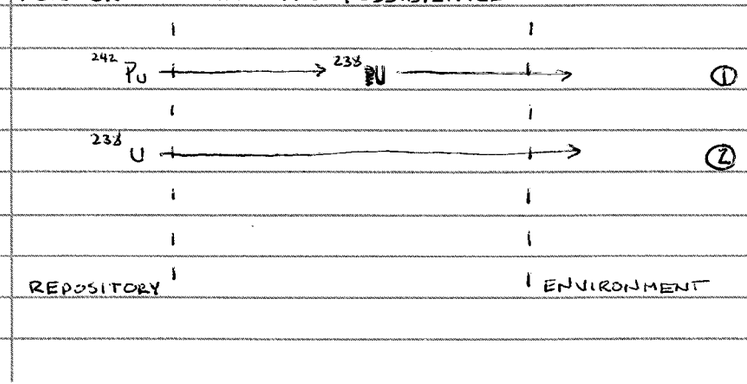

⊕ $t_W = 1{,}000$ YRS

① ASSUME ^{242}Pu TRAVELS A DISTANCE D WHILE SURVIVING FOR AN AVERAGE LIFETIME $\tau = \dfrac{t_{1/2}}{\ln 2}$

$$D = \frac{200\,m}{1000\,YR}\left(\frac{1}{1820}\right)\frac{3.8\times10^{5}\,YR}{\ln 2} = 60.2\,m$$

$\therefore$ ^{242}Pu MIGRATION ACTS LIKE A SOURCE OF ^{238}U THAT IS LOCATED 60.2 m BELOW THE REPOSITORY

$I^{242}_{MAX} = 1.5$ Ci/MTHM $\qquad$ AT $t_M = 0$ $\qquad$ (INVENT)

$\times 70{,}000$ MTHM

1.05×10^{5} Ci

#/YR OF ^{242}Pu MOVING TO 60.2 m BELOW THE REPOSITORY =

$$\frac{1}{\lambda_{242}} I^{242}_{MAX} \cdot DR^{242} \qquad \text{AT } t = \tau^{242}$$

$\lambda_{242} = \dfrac{1}{\tau} = 1.82\times10^{-6}\ \dfrac{1}{YR}$

$DR^{242} = 2\times10^{-7}\ \left(\dfrac{1}{YR}\right)$ $\qquad$ (KERRISK, 1985)

$1.6\times10^{-10}\ \left(\dfrac{1}{YR}\right)$ $\qquad$ (INTERA, 1994)

USE KERRISK, 1985 (CONSERVATIVE); RESULTS WILL JUST SCALE LINEARLY WITH DR^{242}.

#/YR ^{242}Pu = #/YR ^{238}U "APPEARING" AT 60.2 m

$$= \frac{(1.05\times10^{5}\,Ci)}{(1.82\times10^{-6}\,(1/YR))} \cdot (2\times10^{-7}\,1/YR) \cdot \left(\frac{3.7\times10^{10}\,Bq}{1\,Ci}\right)$$ MJ 1/30/95

$$= 4.27\times10^{14}\ \frac{\#\ ^{238}U}{SEC}\left(\frac{3600\,s}{1\,HR}\right)\left(\frac{24\,HR}{1\,D}\right)\left(\frac{365\,D}{1\,YR}\right)$$

$$= 1.35\times10^{22}\ \frac{\#\ ^{238}U}{YR}$$

ACTIVITY PRODUCTION $= \lambda^{238}\left(\dfrac{\#\ ^{238}U}{YR}\right) \qquad \lambda^{238} = 1.54\times10^{-10}\ \dfrac{1}{YR}$

$= 1.54\times10^{-10}\ \dfrac{1}{YR}\ (1.35\times10^{22})$ DISINTEGRATIONS $\dfrac{^{238}U/YR}{YR}$

$= 2.07\times10^{12}\ \frac{D}{YR}\left(\frac{1\ YR}{365D}\right)\left(\frac{1}{365D}\right)\left(\frac{1h}{24h}\right)\left(\frac{1h}{3600s}\right)$

$= 6.6\times10^{4}\ \frac{Bq}{YR}\ \cancel{\left(\frac{0.037\ pCi}{1\ Bq}\right)}\left(\frac{1\times10^{12}\ pCi}{3.7\times10^{10}\ Bq}\right)$

$= 1.782\times10^{6}\ \frac{pCi}{YR}$ ^{238}U "RELEASED" AT 60.2m BELOW REP

$F^{238}_{①} = 1.78\times10^{6}\ \frac{pCi}{YR}\ \mathrm{EXP}\left[\frac{-LN2}{t_{1/2}}\cdot R_F\cdot t_w'\right]\frac{1}{2.75\times10^{9}\ g/YR}\cdot DCF_{ING}\cdot 730\ \frac{l}{YR}$

$t_w' = 1000\ YR\left(\frac{200-60.2}{200}\right) = 699\ YR$

$R_F = 40$ (INTERA, 1994)

$t_{1/2} = 4.5\times10^{9}\ YR$

$DCF_{ING} = 2.3\times10^{-4}\ \frac{mREM}{pCi}$

$F^{238}_{①} = 0.00012\ \frac{mREM}{YR}$

$F^{238}_{②} \Rightarrow DR = 7\times10^{-7}$ (KERRISK, 1985)

$= 1.6\times10^{-12}$ (INTERA, 1994)

USE KERRISK, 1985 (CONSERVATIVE)

$I_{MAX} = 0.3\ Ci/MTHM$ (INVENT)

$*\ 70{,}000\ MTHM$

$2.1\times10^{4}\ Ci$

$F^{238}_{②} = 0.89\ \frac{mREM}{YR}$ AT $t = 40{,}000\ YR$

$\cong F^{238}_{①} + F^{238}_{②}$

- PARENT TRANSPORT NEGLEDGIBLE FOR $t_w = 10{,}000\ YR^{+}$

- IF INTERRA DR IS USED, ^{238}U IS NEGLEDGIBLE (MORE SO), A FACTOR OF 4×10^{5} LOWER

t_w (YRS)	$F_{U\text{-}238}$ ($\frac{mREM}{YR}$)	
10		
100		
1,000	0.89	40,000
10,000	0.89	400,000
25,000	0.89	1×10^{6}
100,000	0.89	4×10^{6}

^{235}U

$$^{243}Cm \xrightarrow{\alpha} {}^{239}Pu \xrightarrow{\alpha} {}^{235}U$$

$t_{1/2} = 32\,YR$ $\qquad$ $t_{1/2} = 24{,}000\,YR$

$R_F = 500$ $\qquad$ $R_F = 1820$

- ASSUME NEGLEDGIBLE TRANSPORT OF PARENTS

$\tau = \frac{24{,}000\,YR}{LN2} = 34{,}624$

$t_W \gtrsim \frac{200m}{5m}\left(\frac{1}{1820}\right)34{,}624 = 761\,YR$

$R_F = 40$

$DR = 7\times10^{-7}\,(\frac{1}{YR})$ (KERRISK, 1985)

$= 1.6\times10^{-12}\,(\frac{1}{YR})$ (INTERA, 1994)

USE KERRISK, 1985 (CONSERVATIVE)

$F_{U\text{-}235} = I_{MAX}\cdot DR\cdot EXP\left[\frac{-LN2}{t_{1/2}}R_F t_W\right]\frac{1}{2.75\times10^9\,\$/YR}\cdot DCF_{ING}\cdot 730\,\$/YR$

$I_{MAX} = 0.025\,Ci/MTHM * 70{,}000\,MTHM$ $\qquad$ AT $t_M \cong 10^5\,YR$

$= 1.75\times10^3\,Ci$

$DCF_{ING} = 2.5\times10^{-4}\,\frac{mREM}{pCi}$

t_W (YRS)	$F_{U\text{-}235}$ $(\frac{mREM}{YR})$	TIME OF OCCURANCE
10		
100		
1,000	0.08	1.4×10^5
10,000	0.08	5×10^5
25,000	0.08	1.1×10^6
100,000	0.08	4.1×10^6

2/1/95

^{234}U

- ASSUME ONLY TRANSPORT OF ^{234}U FROM SOURCE IS SIGNIFICANT FOR DOSE, (UNDERESTIMATES)

$R_F = 40$ (INTERA, 1994)

$DR = 7\times10^{-7}\,(\frac{1}{YR})$ (KERRISK, 1985)

$= 1.6\times10^{-12}\,(\frac{1}{YR})$ (INTERA, 1994)

$DCF_{ING} = 2.6\times10^{-4}\,\frac{mREM}{pCi}$ (DOE/EH 0071)

$t_{1/2} = 2.45\times10^5\,YR$

$I_{MAX} = 2\,Ci/MTHM$ $\qquad$ $t_M \cong 200\,YR$

$= 1.4\times10^5\,Ci$ $\qquad$ (INVENT)

* RECOMMEND INCLUDING U-234 ON THE LIST. *

t_W (YRS)	$F_{U\text{-}234}$ $(\frac{mREM}{YR})$	TIME OF OCCURANCE
10	6.75	600
100	6.68	4,200
1,000	6.04	40,200
10,000	2.18	4×10^5
25,000	0.40	1×10^6
100,000	8×10^{-5}	4×10^6

2/2/95 MSJ

THE NEW RECOMMENDED LIST IS:

1) Np^{237}
2) U^{234}
3) U^{233}
4) Th^{229}
5) Cs^{135}
6) I^{129}
7) Tc^{99}
8) Se^{79}
9) C^{14}

2/7/95 MSJ

KEY RADIONUCLIDES: ELEMENT SOLUBILITIES

^{238}U

ASSUME WATER FLOWING THROUGH THE REPOSITORY IS SATURATED WITH RADIONUCLIDE:

SOLUBILITY OF ^{238}U = 0.004 MOLES/ℓ (KERRISK 1985)
= 9.87×10^{-4} g/m³ (INTERRA, 1994)
= 4.1×10^{-9} MOLES/ℓ

USE KERRISK 1985, CONSERVATIVE

FLOW PASTE WASTE = 9.43×10^{4} ℓ/YR (INTERA 1994)
INVENTORY = 0.3 Ci/MTHM (INVENT)
= 2.1×10^{4} Ci

$$\text{RELEASE RT.} = DR = \frac{\text{AMOUNT RELEASED / UNIT TIME}}{\text{AMOUNT PRESENT}} = \frac{\text{ACTIVITY RELEASED / UNIT TIME}}{\text{ACTIVITY PRESENT}}$$

$$\frac{\text{AMOUNT RELEASED}}{\text{UNIT TIME}} = 0.004 \frac{\text{MOLES}}{\ell}\left(9.43\times10^{4}\frac{\ell}{\text{YR}}\right) = 377 \frac{\text{MOLES}}{\text{YR}}$$

$$\lambda^{238} = \frac{\ln 2}{4.5\times10^{9}\,\text{YR}}\left(\frac{1\,\text{Y}}{365\,\text{D}}\right)\left(\frac{1\,\text{D}}{24\,\text{H}}\right)\left(\frac{1\,\text{H}}{3600\,\text{S}}\right) = 4.88\times10^{-18}\frac{1}{\text{S}}$$

$$\frac{\text{ACTIVITY RELEASED}}{\text{UNIT TIME}} = 377\frac{\text{MOLES}}{\text{YR}}\left(\frac{6.02\times10^{23}\,\#}{1\,\text{MOLE}}\right)\cdot 4.88\times10^{-18}\frac{1}{\text{S}}$$

$$= 1.1\times10^{9}\frac{\text{Bq}}{\text{YR}}\left(\frac{1\,\text{Ci}}{3.7\times10^{10}\,\text{Bq}}\right) = 2.99\times10^{-2}\frac{\text{Ci}}{\text{YR}}$$

$$DR\left(\frac{1}{\text{YR}}\right) = \frac{2.99\times10^{-2}\,\text{Ci/YR}}{2.1\times10^{4}\,\text{Ci}} = 1.4\times10^{-6}\frac{1}{\text{YR}}$$

DR $\left(\frac{1}{\text{YR}}\right)$ EXTRACTED FROM KERRISK 1985 = $7\times10^{-7}\frac{1}{\text{YR}} \approx 1.4\times10^{-6}\frac{1}{\text{YR}}$

CONCLUSIONS: NUMBERS FROM KERRISK 1985 ARE PROBABLY TOO HIGH DUE TO HIS HIGH ELEMENT SOLUBILITIES AND THE ASSUMPTION OF SATURATION OF THE WATER AS IT FLOWS BY THE WASTE. NONETHELESS, I STILL RECOMMEND KEEPING U^{234} ON THE LIST AS IT'S INVENTORY IS THE LARGEST (IE, IT WILL CONTRIBUTE THE MOST TO DOSE OF THE URANIUM FAMILY) AND THESE CONSERVATIVE CALCS SHOW IT COULD HAVE A MODERATE DOSE ASSOCIATED WITH IT'S RELEASE (~ 1-10 $\frac{\text{MREM}}{\text{YR}}$ AT MAXIMUM).

2/8/95 MSJ

KEY RADIONUCLIDES: A LISTING OF IMPORTANT RADIONUCLIDES IN ORDER OF IMPORTANCE FACTOR FOR t_w = 1,000 YRS

	ISOTOPE	F_i	t
	Np-237	7,209	17,000
	Th-229*	6,468	519,000
	U-233*	499	497,000
	I-129	156	1,000
	C-14	51.9	1,000
	Cs-135	41.9	150,000
	Tc-99	28.5	5,000
	U-234	6.04	40,200
PROPOSED CUTOFF	Se-79	4.72	25,000
	U-236	1.29	50,000
	U-238	0.89	40,000
	Pu-242	0.80	1.8×10^{6}
	U-235	0.08	40,000
	Cm-245	3.1×10^{-14}	
	Pu-239	7.1×10^{-21}	1.8×10^{6}
	Cm-246	4.6×10^{-26}	
	Am-243	1.3×10^{-45}	
	Pu-240	1.3×10^{-81}	
	Am-241	$<10^{-100}$	
	Pu-238	$<10^{-100}$	

* = ^{237}Np DAUGHTER (ARTIFICIALLY HIGH DUE TO SECULAR EQ. ASSUMPTION)

2/22/95 MSJ

KEY RADIONUCLIDES: CALCULATION OF THE IMPORTANCE INDEX ASSUMING NO RETARDATION, 1,000 YR GWTT, t = 1,000 YR

ISOTOPE	F_i ($\frac{mrem}{yr}$)
Am-241	18,408.99
Pu-240	7,186.67
Pu-239	4,658.19
Np-237	2,173.37
Cm-245	931.35
Am-243	692.71
Cm-246	180.55
I-129	156.1
C-14	51.9
Cs-135	43.3
Tc-99	29.0
Pu-242	15.21
Pu-238	10.4
U-234	6.1
Se-79	3.37
U-238	0.09
Th-230	0.07
Ni-59	0.03
Cs-137	0.01
Ra-226	–
Pb-210	–
U-233	–
Th-229	–
	34,546

GW IT = 1,000 , t = 11,000 YR. NO RETARDATION

ISOTOPE	F_i ($\frac{MREM}{YR}$)
Np-237	10,319
Pu-239	3,493
Pu-240	2874
Cm-245	465
Am-243	426.3
I-129	156
Th-230	136.64
Ra-226	92.8
Th-229	82.9
Cm-246	57.8
Cs-135	43.3
Pu-242	38.0
Tc-99	29.0
C-14	20.0
U-234	6.74
Se-79	3.37
Am-241	0.77
U-233	0.17
U-238	0.09
U-235	0.065
Pu-238	–
Ni-59	–
Pb-210	–
Cs-137	–
	18,245

1.16 (U-236)

GW IT = 1,000 YR t = 101,000 YR NO RETARDATION

ISOTOPE	F_i ($\frac{MREM}{YR}$)
Np-237	10,319
Th-229	4,142
Ra-226	927.8
Th-230	819.9
Pu-239	460.0
I-129	156
Cs-135	43.3
Pu-242	32.6
Tc-99	21.0
U-234	5.0
U-233	2.50
Pu-240	2.05
Se-79	0.8
Cm-245	0.16
U-238	0.09
C-14	–
Cm-246	–
Am-243	–
Pu-238	–
Am-241	–
Ni-59	–
Pb-210	–
Cs-137	–
	16,933

3/20/95
D.A. Pickett

Sensitivity of Pu Rf.
For retardation case, most significant Pu isotope is ^{242}Pu – see p. 32.
My calculation: $F_{^{242}Pu} = 0.86$ mrem/y at 1.8×10^6 y (a little higher than p. 32).
Use Rf = 1000 instead of 1820:
$F_{^{242}Pu} = 3.8$ at 1.0×10^6 y.

^{239}Pu and ^{240}Pu are not raised enough to make a difference (½-lives are too short for a smaller R to help.).

5/5/95
MSO

TITLE: CRITICALITY CALCULATIONS CONCERNING THE BOWMAN-VENNERI THESIS

MARK JARZEMBA

OBJECTIVE: TO PERFORM CONFIRMATORY AND COMPLEMENTARY CRITICALITY CALCULATIONS CONCERNING THE BOWMAN-VENNERI (B-V) THESIS USING MCNP4A.

INFORMATION SOURCES:

1) BOWMAN AND VENNERI, UNDERGROUND SUPERCRITICALITY FROM PLUTONIUM AND OTHER FISSILE MATERIALS – LA-UR 94-4022A

2) MURPHY AND PABALAN, GEOCHEMICAL INVESTIGATIONS RELATED TO THE YUCCA MOUNTAIN ENVIRONMENT AND POTENTIAL NUCLEAR WASTE REPOSITORY, NUREG/CR-6288

KEFF CALCULATIONS - MCNP 4A USING ENDFB/VI X-SECTIONS AND "BOUND" WATER [S(α,β) CROSS SECTIONS FOR H_2O]

$\rho_B = 2.2$ = BULK DENSITY OF DRY ROCK

ASSUME COMPOSITION OF ROCK FROM TABLE 4-1 COLUMN 3 OF REF 2.)

CALCULATIONS FOR CASE C FROM B-V; IE 200 cm SPHERE w/
0.85 MOLE FRACTION OF ROCK
0.15 MOLE FRACTION OF WATER (IN PORE SPACE)
NEGLEDGIBLE MOLE FRACTION OF ^{239}Pu

IN ~~100g~~ 96.03 g OF SAMPLE: (NOT INCLUDING LOI)
MJ 5-5-95

$74g\ SiO_2 \left(\frac{6.023\times10^{23}\ \#SiO_2}{60.09g\ SiO_2}\right) = 7.417\times10^{23}\ \#Si$ ~~1.438×10^{24}~~ $\#O$ ✓
MSJ 5/9/95 1.483×10^{24}

$0.10g\ TiO_2 \left(\frac{6.023\times10^{23}\ \#TiO_2}{79.88g\ TiO_2}\right) = 7.540\times10^{20}\ \#Ti$ $1.508\times10^{21}\ \#O$ ✓

$12.4g\ Al_2O_3 \left(\frac{6.023\times10^{23}\ \#Al_2O_3}{101.96g\ Al_2O_3}\right) = 1.465\times10^{23}\ \#Al$ $2.197\times10^{23}\ \#O$ ✓

$1.07g\ Fe_2O_3 \left(\frac{6.023\times10^{23}\ \#Fe_2O_3}{159.75g\ Fe_2O_3}\right) = 8.068\times10^{21}\ \#Fe$ $1.210\times10^{22}\ \#O$ ✓

$0.08g\ MnO \left(\frac{6.023\times10^{23}\ \#MnO}{70.94g\ MnO}\right) = 6.792\times10^{20}\ \#Mn$ $6.792\times10^{20}\ \#O$ ✓

$0.31g\ MgO \left(\frac{6.023\times10^{23}\ \#MgO}{40.31g\ MgO}\right) = 4.632\times10^{21}\ \#Mg$ $4.632\times10^{21}\ \#O$ ✓

$0.66g\ CaO \left(\frac{6.023\times10^{23}\ \#CaO}{56.08g\ CaO}\right) = 7.088\times10^{21}\ \#Ca$ $7.088\times10^{21}\ \#O$ ✓

$3.40g\ Na_2O \left(\frac{6.023\times10^{23}\ \#Na_2O}{61.98g\ Na_2O}\right) = 6.608\times10^{22}\ \#Na$ $3.304\times10^{22}\ \#O$ ✓

$4.00g\ K_2O \left(\frac{6.023\times10^{23}\ \#K_2O}{94.20g\ K_2O}\right) = 5.115\times10^{22}\ \#K$ $2.558\times10^{22}\ \#O$ ✓

$0.01g\ P_2O_5 \left(\frac{6.023\times10^{23}\ \#P_2O_5}{141.95g\ P_2O_5}\right) = 8.486\times10^{19}\ \#P$ $2.122\times10^{20}\ \#O$ ✓

TOTAL #O = ~~1.743×10^{24}~~ ✓ 1.788×10^{24}
TOTAL # ATOMS = ~~2.769×10^{24}~~ ✓ 2.814×10^{24} MSJ 5/9/95
TOTAL # "MOLECULES" = 8.908×10^{23} ✓
TOTAL VOLUME = $\frac{96.03\ g}{2.2\ g/cc}$ = 43.650 cc ✓

$\frac{8.908\times10^{23}}{\#\ \text{MOLECULES OF}\ H_2O} = \frac{0.85}{0.15}$ ✓

MOLECULES OF H_2O = $1.572\times10^{23}\ \#H_2O$ ✓
$3.144\times10^{23}\ \#H$ $1.572\times10^{23}\ \#O$

TOTAL # OF ATOMS = ~~3.241×10^{24}~~ ✓ 3.286×10^{24}
TOTAL # OF O = ~~1.900×10^{23}~~ ✓ 1.945×10^{24} MSJ 5/9/95

ATOMIC FRACTIONS DISCOUNTING PLUTONIUM - SATURATED ROCK

Si	~~0.229~~	0.226	Mg	~~0.00143~~	0.00141
O	~~0.5~~ ~~0.586~~ (5-5-95 MJ)	0.592	CA	~~0.00219~~	0.00216
Ti	~~0.000233~~	0.000229	NA	~~0.0204~~	0.0201
AL	~~0.0452~~	0.0446	K	~~0.0158~~	0.0156
^{56}Fe	0.00246	(ASSUME 56)	P	~~0.000026~~	0.000026
MN	~~0.000210~~	0.000207	H	~~0.0970~~	0.0957

TOT = 1.000492 (5/9/95 MSJ)

$\rho_{SAT} = \frac{96.03g_{ROCK} + 4.698g_{WATER}}{43.650\ cc} = 2.31\ \frac{g}{cc}$ ✓

TOTAL MASS OF SATURATED SPHERE = ~~7.741×10^{7}~~ $\frac{4}{3}\pi(200)^3 \times 2.31 = 7.741\times10^{7}\ g$ ✓ 5/9/95 MSJ

TOTAL ATOMS IN SPHERE = ~~$6.022\times10^{24}\ \frac{43.65}{}$~~ $= 2.523\times10^{30}$

① 1ST RUN: ATOMIC FRACTION OF ^{239}Pu = ~~0.0001185 (117.0 kg ^{239}Pu)~~ } 5/5/95 MJ
0.00011692 (116.8 kg ^{239}Pu) ~~0.00118~~
~~0.0001185 (117.0 kg ^{239}Pu)~~ 5/9/95

- USING 300°K X-SECTIONS FOR WATER
- 200 cm SPHERE W/A 800 cm BLANKET OF SATURATED ~~SiO_2~~ ROCK

0.99954 ± 0.00047

KEFF = ~~1.00125 ± 0.00088~~ 5/9/95

68% CONFIDENCE LEVEL ~~[1.00337, 1.00514]~~ [0.99907, 1.00002]
95% CONFIDENCE LEVEL ~~[1.00249, 1.00602]~~ 5/9/95 [0.99860, 1.00040]
99% CONFIDENCE LEVEL ~~[1.00192, 1.00659]~~ 5/9/95 [0.99829, 1.00079]
5/9/95

2ND RUN - SAME ATOM FRACTION W/ WATER AT 400°K

KEFF = 1.01972 ± 0.00093
68% CONFIDENCE LEVEL [1.01880, 1.02065]
95% CONFIDENCE LEVEL [1.01788, 1.02157]
99% CONFIDENCE LEVEL [1.01728, 1.02217]

COMMENT: NEED X-SECTIONS AT 400°K FOR ELEMENTS BESIDES h1001. REACTIVITY WENT UP!! - NOT PHYSICAL (PROBABLY DUE TO DENSITY NOT DECREASING)

MJS 5/5/95 NOT VALID

5/8/95 MSJ - CALCULATE ATOM FRACTIONS FOR REALISTIC ROCK AT DRYNESS

ρ_B = 2.2 g/cc
TOTAL # OF ATOMS IN 43.65 cc SAMPLE = 2.844 × 10^{24} # (p.39) ✓

ATOM FRACTIONS:

O	~~0.625~~	0.635	Mg	~~0.001673~~	0.00165	5/9/95
Si	~~0.264~~	0.264	Ca	~~0.002560~~	0.00252	MSJ
Ti	~~0.000272~~	0.000268	Na	~~0.0239~~	0.0235	
Al	~~0.0529~~	0.0521	K	~~0.01885~~	0.0182	
Fe	~~0.00291~~	0.00287	P	~~0.0000051~~	0.0000302	
Mn	~~0.000245~~	0.000241			TOT = 1.000379	✓

TOTAL MASS IN SPHERE = $\frac{4}{3}\pi(200)^3 \cdot 2.2\frac{g}{cc}$ = 7.372 × 10^7 g

TOTALL # ATOMS IN SPHERE = $\frac{\frac{4}{3}\pi(200)^3}{43.65} \cdot$ ~~2769~~ 2.814 × 10^{24} = ~~5.075 × 10^{29}~~ 2.160 × 10^{30} # MSJ 5-8-95

116.6 kg ^{239}Pu = 2.938 × 10^{26} # ^{239}Pu

^{239}Pu ATOMIC FRACTION = ~~0.000139~~ 0.0001360 5/9/95 ✓

- DRY REACTOR; SATURATED REFLECTOR

0.98488 ± 0.00071

② KEFF = ~~0.98597 ± 0.00133~~

68% CONFIDENCE LEVEL ~~[0.98459, 0.98726]~~ [0.98417, 0.98560]
95% CONFIDENCE LEVEL ~~[0.98327, 0.98858]~~ 5/9/95 [0.98346, 0.98631]
99% CONFIDENCE LEVEL ~~[0.98240, 0.98945]~~ 5/9/95 [0.98300, 0.98677]
5/9/95

LONGER RUN (815,207 PARTICLES) 5/9/95 MJS
KEFF = 0.98407 ± 0.00066
68% CONFIDENCE LEVEL ~~[0.98341, 0.98474]~~ 5/9/95
95% CONFIDENCE LEVEL ~~[0.98275, 0.98540]~~
99% CONFIDENCE LEVEL ~~[0.98232, 0.98583]~~

(3) - DRY REACTOR, DRY REFLECTOR

1.00563 ± 0.00066

KEFF = ~~1.00510 ± 0.00125~~ 5/15/95 MSJ

68% CONFIDENCE LEVEL ~~[1.00385, 1.00635]~~ [1.00497, 1.00629]

95% CONFIDENCE LEVEL ~~[1.00270, 1.00759]~~ [1.00432, 1.00695]

99% CONFIDENCE LEVEL ~~[1.00179, 1.00841]~~ [1.00389, 1.00738]

6/30/95 MSJ — DEVELOPMENT OF AN ASH DISTRIBUTION MODULE FOR TPA VOLCANO MODULE.

TITLE: MASH.EXE

AUTHOR: MARK S. JARZEMBA

~~SJD~~ 6/30/95 MSJ

1) FUNCTIONS THAT THE SOFTWARE IS TO PERFORM: DETERMINE ASH DISTRIBUTION OF LARGER SIZED PARTICLES ($d \geq 30\mu$) AFTER A VOLCANIC EVENT.

2) TECHNICAL BASIS DESCRIPTION: MODEL IS FROM SUZUKI, 1983.

3.) ~~CODE~~ INITIAL PLAN OF DATA FLOW AND USER INTERFACES: MODULE TO BE USED IN TPA CODE TO RELAY RADIONUCLIDE DISTRIBUTION DATA TO DOSE MODULE FROM THE VOLCANO MODULE.

4) PROGRAMMING LANGUAGE TO BE USED: FORTRAN 77

5) HARDWARE PLATFORMS: ANY PLATFORM THAT WILL SUPPORT AN F77 COMPILER; ORIGINALLY DEVELOPED ON MAC 8100/100.

6) GRAPHICS OUTPUT DEVICE: NONE

7) PRE AND POST PROCESSORS: NONE

8) FLOW AND DATA STRUCTURES: UNKNOWN AT THIS TIME.

REFERENCE: SUZUKI, T. - A THEORETICAL MODEL FOR THE DISPERSION OF ASH, ARC. VOLCANISM; PHYSICS AND TECTONICS. TERRA SCIENTIFIC PUBLISHING, 1983

STEPS TAKEN IN SOFTWARE DEVELOPMENT

1) DEVELOP A 2-D INTEGRATOR BASED ON "NUMERICAL RECIPES" SUBROUTINES TRAP2D AND QSIM. INTEGRATOR IS TESTED BY INTEGRATING A FUNCTION (OR SEVERAL) THAT CAN BE DONE ANALYTICALLY TO CHECK CODE RESULTS, NOTE: DOUBLE PRECISION

2) DEVELOP FUNCTION SUBROUTINES AS IDENTIFIED IN SUZUKI, 1983. VERIFY FUNCTIONS ARE WORKING CORRECTLY BY COMPARISON TO DATA IN SUZUKI.

3) COMPARE CODE RESULTS FOR ASH DISPERSION WITH SUZUKI, 1983 RESULTS.

LIMITED DETAIL OF OTHER APPROACHES CONSIDERED

1) C. LIU HAS USED AN ALTERNATE (TO SUZUKI, 1983) P(Z) SUPPOSIDLY WITH GOOD AGREEMENT TO SUZUKI'S RESULTS. THIS "FACT" IS SEEN FROM ONLY HIS PERSONAL NOTES AND NOT THE PRINTOUT I HAVE OF HIS CODE. I WILL ONLY USE MODELS, PARAMETERS AS PUBLISHED IN SUZUKI, 1983.

IN PROCESS TESTING:

1) SUZUKI HAS PUBLISHED DATA FOR MANY PARAMETERS IN HIS PAPER. DURING CODE DEVELOPMENT, PARAMETERS WERE COMPARED TO HIS DATA (AS CALCULATED BY MY CODE); IE. $v0$, $\rho(z)$ (RHO), $tf(z, RH=)$

7/13/95 DATA FOR WIND DIRECTION + SAMPLING

MSJ DIRECTION: FROM SCP, 1988 EXTRAPOLATED FROM p 5-26; 5000 FT DATA (ANNUAL)

DIRECTION (TO)	ANGLE WRT EAST (°)	$\lambda(\frac{E}{m})$	FRACTION OF OCCURANCE / SUM	
E	0	0.313	0.018/1.011 =	0.017804
E BY NE	22.5	0.222	0.036/1.011 =	0.035608
				0.053412
NE	45	0.149	0.084/1.011 =	0.083086
				0.136498
N BY NE	67.5	0.139	0.132/1.011 =	0.130560
				0.267058
N	90	0.156	0.111/1.011 =	0.109790
				0.376848
N BY NW	112.5	0.217	0.054/1.011 =	0.053412
				0.430260
NW	135	0.323	0.031/1.011 =	0.030663
				0.460923
W BY NW	157.5	0.400	0.022/1.011 =	0.021761
				0.482684
W	180	0.417	0.014/1.011 =	0.013848
				0.496532
E BY SE	-22.5	0.244	0.027/1.011 =	0.026706
				0.523238
SE	-45	0.213	0.041/1.011 =	0.040554
				0.563792
S BY SE	-67.5	0.189	0.073/1.011 =	0.072206
				0.635998
S	-90	0.172	0.142/1.011 =	0.140450
				0.776448
S BY SW	-112.5	0.185	0.112/1.011 =	0.110780
				0.887228
SW	-135	0.208	0.067/1.011 =	0.066271
				0.953499
W BY SW	-157.5	0.294	0.032/1.011 =	0.031652
				0.985151
CALM	N/A	∞	0.015/1.011 =	0.014849
				1.000000

7/14/95 COORDINATE ROTATIONS, VARIABLE SAMPLINGS

MSJ

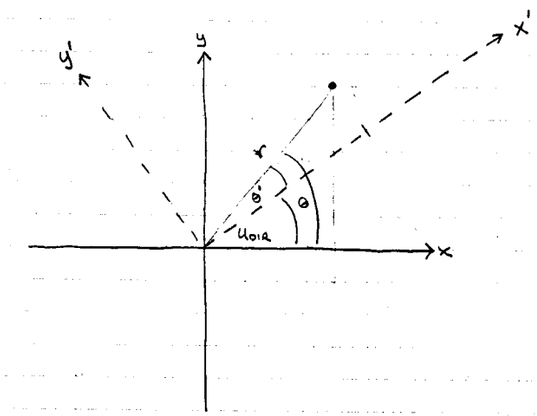

IN ORIGINAL CO-ORDINATE SYSTEM $p = (r, \theta)$

IN NEW CO-ORDINATE SYSTEM $p = (r', \theta')$

$r' = r$ $\qquad r = \sqrt{x^2 + y^2}$

$\theta' = \theta - u_{DIR}$ $\qquad r = \sqrt{(x')^2 + (y')^2}$

$x = r\cos\theta$ $\qquad x_p^2 + y_p^2 = x^2 + y^2$

$x' = r\cos\theta'$

$\frac{x_p}{\cos\theta_p} = \frac{y_p}{\sin\theta_p} \Longrightarrow y_p = x_p \tan\theta_p$

$y = r\sin\theta$

$y' = r\sin\theta'$

$x_p = \frac{y_p}{\tan\theta_p}$

$x_p^2 + x_p^2 \tan^2\theta_p = x^2 + y^2$ $\qquad y_p^2 + \frac{y_p^2}{\tan^2\theta_p} = x^2 + y^2$

$x_p^2 = \frac{x^2 + y^2}{1 + \tan^2\theta_p}$ $\qquad y_p^2 = \frac{x^2 + y^2}{\left(1 + \frac{1}{\tan^2\theta_p}\right)}$

$\theta_p = \theta - u_{DIR}$

$= \arctan\left(\frac{y}{x}\right) - u_{DIR}$

$x_p^2 = \frac{x^2 + y^2}{1 + \tan^2\left[\arctan(y/x) - u_{DIR}\right]}$ $\qquad y_p^2 = \frac{x^2 + y^2}{1 + \tan^{-2}\left[\arctan(y/x) - u_{DIR}\right]}$

$x_p = \pm\sqrt{\frac{x^2 + y^2}{1 + \tan^2\left[\arctan(y/x) - u_{DIR}\right]}}$ $\qquad y_p = \pm\sqrt{\frac{x^2 + y^2}{1 + \tan^{-2}\left[\arctan(y/x) - u_{DIR}\right]}}$

- INFORMATION NEEDS (SAMPLED VARIABLES)

MASS OF ERUPTED MATERIAL

$H = 0.24\ \dot{q}^{1/4}$ ($\dot{q}$ IN Kg/s) (H IN m) — WALKER, SELF AND WILSON 1983

$H = 8.2\ \dot{E}^{1/4}$ ($\dot{E}$ IN W) (H IN Km) — WILSON, ET. AL. 1978

$\dot{E} = \rho W_o (\pi r_v^2)\, s(\theta - \theta_{AM}) F$ — WILSON, ET. AL. 1978

$= \dot{q}\, s\, (\theta - \theta_{AM}) F$

$\dot{q} = \rho W_o (\pi r_v^2)$

① CHOOSE $\mathrm{Log}_{10} E$ UNIFORMLY ON [16 , 18] — WILSON ET. AL 1978
E IN J

② CHOOSE $\mathrm{Log}_{10} T$ UNIFORMLY ON [3.26, 4.78] — "
T IN SEC

$s = 1{,}100\ J/Kg\,°K$ — "

③ $\dot{E} = \dfrac{E}{T}$ — CONSTANT POWER APPROXIMATION

④ $H = 8.2\ \dot{E}^{1/4}$ (H IN Km) — "

⑤ $\dot{q} = \left(\dfrac{H}{0.24}\right)^4$ — WALKER, ET. AL 1983

⑥ $q = \dot{q} \cdot (60T) \cdot 1000\ (\frac{g}{Kg})$ — CONSTANT EXPULSION RATE APPROX.

⑦ $\mathrm{Log}\, r_v = -1.0294 + 0.27435\ \mathrm{Log}\, \dot{q}$ — EXTRACTED FROM WILSON AND HEAD, 1981

⑧ $W_o = \dfrac{\dot{q}}{\rho \pi r_v^2}$ — CONSERVATION OF MASS

7/18/95
MSJ

RELATIONSHIP OF INTERDEPENDENT VARIABLES.

$P = \rho v s (T_M - T_A) F$

ρ = ASH DEN (Kg/m^3)
v = m^3/s EJECTION RT
$s = 1.1 \times 10^3$ J/Kg. °K
T_M = MEDIAN TEMP = 1050°C (?)
T_A = AMBIENT TEMP = 0°C
F = 0.7 - 1.0 HT. TRANSFER EFF.
P = INITIAL POWER ($6.7 \times 10^{11} \rightarrow 1.6 \times 10^{12}$ W)

$H_{MAX} = 8.2 \rho^{0.25}$ (m)

11/19/95
MSJ

· MPC CRITICALITY INVESTIGATIONS

11/16/95
MSJ

- NO BORON
- 3.75 % ENRICHED UO_2 FUEL (FRESH) AT $\rho = 10$ g/cm^3
- FLOODED MPC; UNIFORMLY DISTRIBUTED SOURCE

K_{EFF}: 68% CONFIDENCE [1.14205, 1.14620]
95% CONFIDENCE [1.14000, 1.14825]
98% CONFIDENCE [1.13865, 1.14960]

POOR DISTRIBUTION

- ONE SOURCE POINT AT MPC CENTER

11/19/95
MSJ

1) - NO BORON
- 3.75 % ENRICHED UO_2 FRESH FUEL AT $\rho = 10$ g/cm^3
- FLOODED MPC
- SOURCE DISTRIBUTED AT 1 SOURCE/ASSEMBLY
- 0% B IN 304 SS

K_{EFF} 68% - [1.13898, 1.14382]
95% - [1.13658, 1.14622]
99% - [1.13501, 1.14780]

2) - SAME W/ 0.41 % BORON-10

K_{EFF} 68% - [1.00314, 1.00803]
95% - [1.00072, 1.01045]
99% - [0.99913, 1.01204]

ERROR FOUND

3) - SAME W/ 0.8 % BORON-10

ρ_{UO_2} = 10 g/cc (DUDERSTADT + HAMILTON)
= 10.96 g/cc (CRC)

11/19/95 MS

NEW SET OF RUNS

1) - NO BORON
- 3.75% ENRICHED UO_2 FRESH FUEL w/ ρ = 10.96 g/cc
- FLOODED MPC
- SOURCE DISTRIBUTION = 1 INITIAL SOURCE PT / ASSEMBLY
-

KEFF -	68%	[1.15382	, 1.15749]
	95%	[1.15119	, 1.15957]
	99%	[1.14983	, 1.16094]

2) - ^{10}B = 0.4% IN 304SS (~~BY WEIGHT~~ BY # DENSITY)
= 0.073 WT %

KEFF -	68%	[1.01321	, 1.01744]
	95%	[1.01112	, 1.01953]
	99%	[1.00975	, 1.02090]

3) - ^{10}B = 2.15% BY # %
= 0.4% IN 304SS BY WT %

KEFF -	68%	[0.91359	, 0.91873]
	95%	[0.91104	, 0.92128]
	99%	[0.90937	, 0.92295]

4) - ^{10}B = 4.7% BY # %
= 0.8% BY WT

KEFF -	68%	[0.87862	, 0.88266]
	95%	[0.87662	, 0.88466]
	99%	[0.87530	, 0.88598]

5) - ^{10}B = 6.45% BY #
1.25 % BY WT.

KEFF -	68%	[0.85634	, 0.86116]
	95%	[0.85395	, 0.86354]
	99%	[0.85239	, 0.86511]

6) - ^{10}B = 8.07% BY #
1.6% BY WT.

11/22/95 MST

KEFF -	68%	[0.84198	, 0.84667]
	95%	[0.83966	, 0.84899]
	99%	[0.83814	, 0.85052]

7) - ^{10}B = 9.89% BY #
2.0% BY WT

KEFF -	68%	[0.83254	, 0.83785]
	95%	[0.82991	, 0.84048]
	99%	[0.82818	, 0.84221]

11/20/95 1) - 1% ENRICHED FRESH FUEL
- NO BORON
- FLOODED MPC

KEFF -	68%	[0.73347	, 0.73658]
	95%	[0.73192	, 0.73813]
	99%	[0.73091	, 0.73914]

2) - 1.5% ENRICHED FRESH FUEL

KEFF	68%	[0.86934	, 0.87280]
	95%	[0.86764	, 0.87451]
	99%	[0.86652	, 0.87563]

3) 2% ENRICHED FUEL

KEFF	68%	[0.96483	, 0.96833	]
	95%	[0.96310	, 0.97007	]
	99%	[0.96196	, 0.97120	]

11/22/95 MJS

4) 2.5% ENRICHED FRESH FUEL

KEFF	68%	[1.04242	, 1.04641	]
	95%	[1.04044	, 1.04838	]
	99%	[1.03915	, 1.04968	]

11/28/95 RUNS WITH NEW MODEL

- 3.75% FRESH FUEL
- NO BORON
- FLOODED MPC

	68%	[1.23684	, 1.24122	]
	95%	[1.23467	, 1.24338	]
	99%	[1.23325	, 1.24481	]

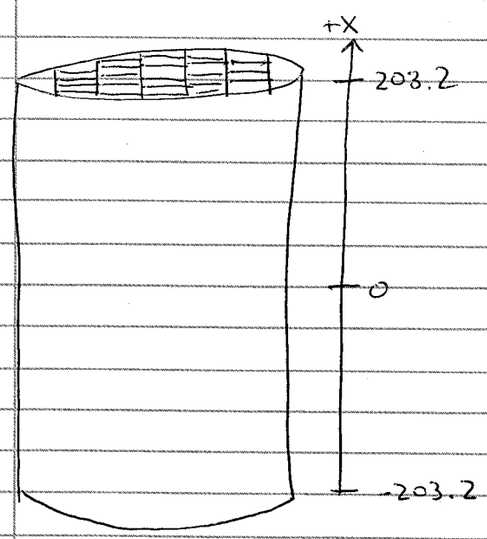

WATER HT = 500 CM.

BOREHOLE EMPLACED

WATER HT = 0

	68%	[1.21880	, 1.22262	]
	95%	[1.21691	, 1.22567	]
	99%	[1.22451	, 1.22578	]

WATER HT = -203.2

3.75% FRESH FUEL WITH NO BORON (BOREHOLE EMPLACED)

11/28/95
MSJ

Water Ht (cm)	Keff	68% confidence		95% confidence		99% confidence	
0	1.22071	1.21880	1.22262	1.21691	1.22567	1.22451	1.22575
-203.2	0.40511	0.40350	0.40673	0.40191	0.40832	0.40086	0.40937
-200.0	0.48552	0.48257	0.48846	0.47964	0.49139	0.47772	0.49331
-195.0	0.68043	0.67732	0.68345	0.67422	0.68663	0.67219	0.68867
-190.0	0.82058	0.81710	0.82407	0.81364	0.82752	0.81137	0.82980
-185.0	0.90449	0.90135	0.90763	0.89823	0.91075	0.89618	0.91281
-180.0	0.98283	0.97954	0.98612	0.97627	0.98939	0.97412	0.99154
6.2% -175.0	1.02465	1.02188	1.02742	1.01912	1.03018	1.01731	1.03199
-170.0	1.06351	1.06039	1.06664	1.05728	1.06975	1.05523	1.07180
-150.0	1.13788	1.13488	1.14068	1.13199	1.14356	1.13010	1.14546
-100.0	1.19398	1.19095	1.19700	1.18794	1.20001	1.18596	1.20199
-50.0	1.21296	1.20991	1.21601	1.20698	1.21904	1.20489	1.22103
0.0	1.22163	1.21893	1.22433	1.21625	1.22701	1.21449	1.22878
100.0	1.23650	1.23356	1.23944	1.23064	1.24236	1.22872	1.24428
203.2	1.23501	1.23224	1.23778	1.22949	1.24054	1.22768	1.24235

11/29/95
MSJ

MPC INPUT DECK

```
MPC Model
C
C
C
C Cell Cards
C
100  12  -0.0013 -6      u=1 imp:n=1 $ first guide tube-dry
101  3   -2.7     6 -7   u=1 imp:n=1
102  12  -0.0013  7      u=1 imp:n=1
C
103  4   -1.0    -6      u=2 imp:n=1 $ first guide tube-wet
104  3   -2.7     6 -7   u=2 imp:n=1
105  4   -1.0     7      u=2 imp:n=1
C
107  1   -10.96  -8      u=3 imp:n=1 $ first fuel pin-dry
108  2   -0.0013  8 -9   u=3 imp:n=1
109  3   -2.7     9 -10  u=3 imp:n=1
110  12  -0.0013  10     u=3 imp:n=1
C
112  1   -10.96  -8      u=4 imp:n=1 $ first fuel pin-wet
113  2   -0.0013  8 -9   u=4 imp:n=1
114  3   -2.7     9 -10  u=4 imp:n=1
115  4   -1.0     10     u=4 imp:n=1
C
C    The dry universe
C
120  0   -60  61  -62  63 lat=1 u=8 &
                    fill=-7:7 -7:7 0:0 &
     3 3 3 3 3  3 3 3 3 3  3 3 3 3 3 &
     3 3 3 3 3  3 3 3 3 3  3 3 3 3 3 &
     3 3 3 3 3  1 3 3 3 1  3 3 3 3 3 &
     3 3 3 1 3  3 3 3 3 3  3 1 3 3 3 &
     3 3 3 3 3  3 3 3 3 3  3 3 3 3 3 &
C
     3 3 1 3 3  1 3 3 3 1  3 3 1 3 3 &
     3 3 3 3 3  3 3 3 3 3  3 3 3 3 3 &
     3 3 3 3 3  3 3 1 3 3  3 3 3 3 3 &
     3 3 3 3 3  3 3 3 3 3  3 3 3 3 3 &
     3 3 1 3 3  1 3 3 3 1  3 3 1 3 3 &
C
     3 3 3 3 3  3 3 3 3 3  3 3 3 3 3 &
     3 3 3 1 3  3 3 3 3 3  3 1 3 3 3 &
     3 3 3 3 3  1 3 3 3 1  3 3 3 3 3 &
     3 3 3 3 3  3 3 3 3 3  3 3 3 3 3 &
     3 3 3 3 3  3 3 3 3 3  3 3 3 3 3   imp:n=1
C
C    The wet universe
C
130  0   -60  61  -62  63 lat=1 u=9 &
                    fill=-7:7 -7:7 0:0 &
     4 4 4 4 4  4 4 4 4 4  4 4 4 4 4 &
     4 4 4 4 4  4 4 4 4 4  4 4 4 4 4 &
     4 4 4 4 4  2 4 4 4 2  4 4 4 4 4 &
     4 4 4 2 4  4 4 4 4 4  4 2 4 4 4 &
     4 4 4 4 4  4 4 4 4 4  4 4 4 4 4 &
C
     4 4 2 4 4  2 4 4 4 2  4 4 2 4 4 &
     4 4 4 4 4  4 4 4 4 4  4 4 4 4 4 &
     4 4 4 4 4  4 4 2 4 4  4 4 4 4 4 &
     4 4 4 4 4  4 4 4 4 4  4 4 4 4 4 &
```

```
     4 4 2 4 4  2 4 4 4 2  4 4 2 4 4 &
c
     4 4 4 4 4  4 4 4 4 4  4 4 4 4 4 &
     4 4 4 2 4  4 4 4 4 4  4 2 4 4 4 &
     4 4 4 4 4  2 4 4 4 2  4 4 4 4 4 &
     4 4 4 4 4  4 4 4 4 4  4 4 4 4 4 &
     4 4 4 4 4  4 4 4 4 4  4 4 4 4 4   imp:n=1
c
400  0 -12 77 -14 74 fill=8 u=10 imp:n=1
401  5 -8.0 12 -15 78 -18 u=10  imp:n=1
402  6 -2.7 15 -16 79 -19 u=10  imp:n=1
403  5 -8.0 75 -77 78 -18 u=10  imp:n=1
404  6 -2.7 76 -75 79 -19 u=10  imp:n=1
405  5 -8.0 14 -18 77 -12 u=10  imp:n=1
406  6 -2.7 18 -19 75 -15 u=10  imp:n=1
407  5 -8.0 78 -74 77 -12 u=10  imp:n=1
408  6 -2.7 79 -78 75 -15 u=10  imp:n=1
409  5 -8.0 16:19:-76:-79 u=10  imp:n=1
410  0 97 17 90 -20 lat=1 fill=10 u=6 imp:n=1 $ dry assembly
420  0 (1 32 -5 81 -21 84 -24):(1 &
          32 -5 21 -22 83 -23):(1 &
          32 -5 82 -81 83 -23) &
     fill=6 imp:n=1                          $ internals-dry
c
430  0 -12 77 -14 74 fill=9 u=11 imp:n=1
431  5 -8.0 12 -15 78 -18 u=11  imp:n=1
432  6 -2.7 15 -16 79 -19 u=11  imp:n=1
433  5 -8.0 75 -77 78 -18 u=11  imp:n=1
434  6 -2.7 76 -75 79 -19 u=11  imp:n=1
435  5 -8.0 14 -18 77 -12 u=11  imp:n=1
436  6 -2.7 18 -19 75 -15 u=11  imp:n=1
437  5 -8.0 78 -74 77 -12 u=11  imp:n=1
438  6 -2.7 79 -78 75 -15 u=11  imp:n=1
439  5 -8.0 16:19:-76:-79 u=11  imp:n=1
440  0 97 17 90 -20 lat=1 fill=11 u=7 imp:n=1 $ wet assembly
450  0 (-1 32 -5 81 -21 84 -24):(-1 &
          32 -5 21 -22 83 -23):(-1 &
          32 -5 82 -81 83 -23) &
     fill=7 imp:n=1                          $ internals-wet
c
550  8    -8.0 32 -5 22 -28 -31    imp:n=1  $ basket externals
551  8    -8.0 32 -5 21 -22 23 -29 imp:n=1  $
552  8    -8.0 32 -5 21 -27 29 -31 imp:n=1
553  8    -8.0 32 -5 81 -21 24 -30 imp:n=1
554  8    -8.0 32 -5 20 -34 28 -31 imp:n=1
555  8    -8.0 32 -5 17 -33 30 -31 imp:n=1
556  4    -1.0 -1 32 -5 28 -31 90 -20 imp:n=1 $ below water line
557  4    -1.0 -1 32 -5 28 -31 34     imp:n=1
558  4    -1.0 -1 32 -5 27 -22 29 -31 imp:n=1
559  4    -1.0 -1 32 -5 33 -21 30 -31 imp:n=1
560  4    -1.0 -1 32 -5 97 -17 30 -31 imp:n=1
c
561  12    -0.0013  1 32 -5 28 -31 90 -20 imp:n=1 $ above water line
562  12    -0.0013  1 32 -5 28 -31 34     imp:n=1
563  12    -0.0013  1 32 -5 27 -22 29 -31 imp:n=1
564  12    -0.0013  1 32 -5 33 -21 30 -31 imp:n=1
565  12    -0.0013  1 32 -5 97 -17 30 -31 imp:n=1
c
570  8    -8.0 32 -5  98 -97  30 -31 imp:n=1
571  8    -8.0 32 -5  85 -81  29 -31 imp:n=1
```



```
572  8    -8.0 32 -5  82 -81  23 -29 imp:n=1
573  8    -8.0 32 -5  86 -82 -31     imp:n=1
574  8    -8.0 32 -5 -31 -86  20 -34 imp:n=1
575  8    -8.0 32 -5  91 -90 -31 -86 imp:n=1
576  8    -8.0 32 -5  87 -83  82 -81 imp:n=1
577  8    -8.0 32 -5  85 -81 -31 -87 imp:n=1
578  8    -8.0 32 -5  88 -84  81 -21 imp:n=1
579  8    -8.0 32 -5  98 -97 -31 -88 imp:n=1
580  8    -8.0 32 -5  17 -33 -31 -88 imp:n=1
581  8    -8.0 32 -5  21 -27 -31 -87 imp:n=1
582  8    -8.0 32 -5  21 -22  87 -83 imp:n=1
583  8    -8.0 32 -5  28 -31 -90  91 imp:n=1
c
590  4    -1.0 -1 32 -5  30 -31  81 -98 imp:n=1 $ below water line
591  4    -1.0 -1 32 -5  82 -85  29 -31 imp:n=1
592  4    -1.0 -1 32 -5 -31 -86  34     imp:n=1
593  4    -1.0 -1 32 -5  90 -20 -31 -86 imp:n=1
594  4    -1.0 -1 32 -5 -31 -86 -91     imp:n=1
595  4    -1.0 -1 32 -5 -31 -87  82 -85 imp:n=1
596  4    -1.0 -1 32 -5  81 -98 -31 -88 imp:n=1
597  4    -1.0 -1 32 -5  97 -17 -31 -88 imp:n=1
598  4    -1.0 -1 32 -5  33 -21 -31 -88 imp:n=1
599  4    -1.0 -1 32 -5  27 -31 -22 -87 imp:n=1
600  4    -1.0 -1 32 -5  28 -31 -91     imp:n=1
c
610  12  -0.0013 1 32 -5  30 -31  81 -98 imp:n=1 $ above water line
611  12  -0.0013 1 32 -5  82 -85  29 -31 imp:n=1
612  12  -0.0013 1 32 -5 -31 -86  34     imp:n=1
613  12  -0.0013 1 32 -5  90 -20 -31 -86 imp:n=1
614  12  -0.0013 1 32 -5 -31 -86 -91     imp:n=1
615  12  -0.0013 1 32 -5 -31 -87  82 -85 imp:n=1
616  12  -0.0013 1 32 -5  81 -98 -31 -88 imp:n=1
617  12  -0.0013 1 32 -5  97 -17 -31 -88 imp:n=1
618  12  -0.0013 1 32 -5  33 -21 -31 -88 imp:n=1
619  12  -0.0013 1 32 -5  27 -31 -22 -87 imp:n=1
620  12  -0.0013 1 32 -5  28 -31 -91     imp:n=1
c
670  8  -8.0   5 -35  36 -31  imp:n=1 $ container and plugs
671  4  -1.0  -1   5 -35 -36  imp:n=1
672  4  -1.0  -1  35 -37 -31  imp:n=1
673  8  -8.0  37 -38  36 -31  imp:n=1
674  4  -1.0  -1  37 -38 -36  imp:n=1
675  8  -8.0  38 -39 -31      imp:n=1
676  7  -19.0 39 -41 -40      imp:n=1
677  8  -8.0  39 -41  40 -31  imp:n=1
678  8  -8.0  41 -42 -31      imp:n=1
679  8  -8.0  42 -43 -31      imp:n=1
680  8  -1.0  43 -44 -31      imp:n=1  $ Honeycomb spacer
681  8  -8.0  44 -45 -31      imp:n=1
682  8  -8.0  54 -45  31 -46  imp:n=1
683  12 -0.0013  1   5 -35 -36  imp:n=1
684  12 -0.0013  1  35 -37 -31  imp:n=1
685  12 -0.0013  1  37 -38 -36  imp:n=1
c
c
689  8  -8.0  94 -32  36 -31      imp:n=1
690  4  -1.0  -1  94 -32 -36      imp:n=1
691  4  -1.0  -1  93 -94 -31      imp:n=1
692  8  -8.0  92 -93 -31  36      imp:n=1
693  4  -1.0  -1  92 -93 -36      imp:n=1
```

```
694  8  -8.0  59 -92 -31       imp:n=1
695  7  -19.0 58 -59 -40       imp:n=1
696  8  -8.0  58 -59 -31 40    imp:n=1
697  8  -8.0  57 -58 -31       imp:n=1
698  8  -8.0  56 -57 -31       imp:n=1
699  8  -1.0  55 -56 -31       imp:n=1  $ Honeycomb spacer
700  8  -8.0  54 -55 -31       imp:n=1
701  12 -0.0013  1  94 -32 -36       imp:n=1
702  12 -0.0013  1  93 -94 -31       imp:n=1
703  12 -0.0013  1  92 -93 -36       imp:n=1
c
710  9   -8.0 45 -47 -48       imp:n=1
711  9   -8.0 54 -45  46 -48   imp:n=1
712  10  -8.0 47 -49 -50       imp:n=1
713  10  -8.0 95 -47  48 -50   imp:n=1
c
720  9   -8.0 95 -54 -48       imp:n=1
722  10  -8.0 96 -95 -50       imp:n=1
c
c   A foot of crushed wet tuff
c
730  11  -2.0 49 -51 -52  imp:n=1
731  11  -2.0 99 -96 -52  imp:n=1
732  11  -2.0 96 -49 -52 50  imp:n=1
734  0  -99:51:52  imp:n=0  $ the rest of the world

c       surface cards
c
c
1   px 00.001
5   px 203.200
6   cx 0.580
7   cx 0.640
8   cx 0.455
9   cx 0.474
10  cx 0.535
12  py 11.190
14  pz 11.190
15  py 11.820
16  py 12.450
17  py 12.69
18  pz 11.820
19  pz 12.450
20  pz 12.69
21  py 37.199
22  py 62.579
23  pz 37.199
24  pz 62.579
27  py 37.834
28  py 63.214
29  pz 37.834
30  pz 63.214
31  cx 73.675
32  px -203.200
33  py 13.325
34  pz 13.325
35  px 210.800
36  cx 71.135
37  px 246.400
38  px 254.000
```



```
39  px 259.100
40  cx 72.405
41  px 264.200
42  px 265.500
43  px 270.600
44  px 273.100
45  px 280.100
46  cx 76.215
47  px 282.600
48  cx 78.755
49  px 297.800
50  cx 93.995
51  px 328.300
52  cx 124.500
54  px -280.100
55  px -273.100
56  px -270.600
57  px -265.500
58  px -264.200
59  px -259.100
c
60  py  0.7465
61  py  -0.7465
62  pz  0.7465
63  pz  -0.7465
c
74  pz -11.190
75  py -11.820
76  py -12.450
77  py -11.190
78  pz -11.820
79  pz -12.450
81  py -37.199
82  py -62.579
83  pz -37.199
84  pz -62.579
85  py -37.834
86  py -63.214
87  pz -37.834
88  pz -63.214
90  pz -12.69
91  pz -13.325
92  px -254.000
93  px -246.400
94  px -210.800
95  px -282.600
96  px -297.800
97  py -12.69
98  py -13.325
99  px -328.300

c       data/material cards
c
c
c
m1   92235 0.01203  $ UO2 fresh; 3.75%
     92238   0.3208 &
     8016    0.6667
c    m1   8016    0.6667 &     $ UO2 fresh; 3.25%
c    92235   0.010833 &
```

```
c     92238   0.32247
c     m1   8016    0.6667 &
c     92235   0.00833 &
c     92238   0.32500
c     m1   8016    0.677
c     43099   0.000575 & $ UO2 fuel-3.25 33 GWd
c     45103   0.000357 & $ Invent-100yr
c     47109   2.42e-6 &
c     55133   2.97e-4 &
c     60143   7.14e-4 &
c     60145   5.95e-4 &
c     62147   1.06e-4 &
c     62149   1.78e-4 &
c     62150   1.2e-4 &
c     62151   3.06e-6 &
c     62152   1.92e-5 &
c     63151   9.5e-5 &
c     63153   1.19e-5 &
c     64155   5.96e-6 &
c     92233   5.4e-9 &
c     92234   8.07e-5 &
c     92235   0.00261 &
c     92236   0.00123 &
c     92238   0.313 &
c     93237   1.80e-4 &
c     94238   2.0e-5 &
c     94239   1.626e-3 &
c     94240   7.266e-4 &
c     94241   3.1e-6 &
c     94242   1.32e-4 &
c     95241   3.42e-4 &
c     95242   1.7e-7 &
c     95243   2.48e-5 &
c     96245   2.315e-7
m2    7014   0.8   8016 0.2                          $ (gap)
m3    50000 1.5    26056 0.15   24052 0.1   &       $ Zircaloy 2
      28058 0.05   40000 99.7
m4    1001 0.667    8016 0.333                       $ water
mt4   lwtr.01t
m5     6000 0.0037   25055 0.02   15031 0.0008  &    $ type 304-B
      14000 0.0147   24052 0.211   28058 0.1403  &    $ stainless
      16000 0.00051   26056 0.609
c      5010   0.0989
m6    13027 90.0        $ Aluminum
m7    92238 1.00                                     $ depleted uranium
m8     6000 0.0037   25055 0.02   15031 0.0008  &    $ type 304
      14000 0.0147   24052 0.211   28058 0.1403  &    $ stainless
      16000 0.00051   26056 0.609
m9     6000 0.2    25055 1.0    14000 0.2     &    $ (alloy 825)
      28058 0.5    42000 0.5    15031 0.04    &
      26056 94.02 24052 0.5    16000 0.04
m10   25055 1.00    6000   0.9   26056 98.1          $ mild carbon steel
m11   1001 0.17 14000 0.25 8016 0.58                  $ (wet crushed tuff)
mt11  lwtr.01t
m12   7014 0.8 8016 0.2                               $ air
kcode 800 1.0 15 85
ksrc  0 0 1.49          0 0  26.87        0 0 52.25 &
      0 0 -23.89        0 0 -49.27 &
      0 25.38 1.49      0 25.38 26.87   0 25.38 52.25 &
      0 25.38 -23.89    0 25.38 -49.27 &

      0 50.76 1.49      0 50.76 26.87   0 50.76 -23.89 &
      0 -25.38 1.49     0 -25.38 26.87 0 -25.38 52.25 &
      0 -25.38 -23.89 0 -25.38 -49.27 &
      0 -50.76 1.49     0 -50.76 26.87 &
      0 -50.76 -23.89
```


3.75% FRESH FUEL WITH NO BORON (DRIFT EMPLACEMENT)

12/8/95 MSJ

WATER Ht (cm)	KEFF	STD. DEV	68%	CONF	95%	CONF.	99%	CONF
-74.0	0.37484	0.00110	0.37374	0.37595	0.37265	0.37704	0.37192	0.37776
-70.0	0.38133	0.00136	0.37997	0.38269	0.37862	0.38404	0.37773	0.38493
-65.0	0.38616	0.00151	0.38465	0.38768	0.38314	0.38918	0.38215	0.39018
-60.0	0.41418	0.00190	0.41228	0.41608	0.41040	0.41797	0.40916	0.41921
-55.0	0.63982	0.00278	0.63704	0.64261	0.63427	0.64537	0.63245	0.64720
-50.0	0.83499	0.00297	0.83202	0.83797	0.82906	0.84093	0.82712	0.84287
-45.0	0.94898	0.00321	0.94577	0.95219	0.94258	0.95539	0.94047	0.95749
-40.0	1.01815	0.00276	1.01538	1.02091	1.01264	1.02366	1.01083	1.02547
-35.0	1.03014	0.00275	1.02739	1.03288	1.02467	1.03561	1.02287	1.03741
-30.0	1.06230	0.00321	1.05908	1.06551	1.05589	1.06871	1.05379	1.07081
-25.0	1.09846	0.00286	1.09559	1.10133	1.09274	1.10418	1.09086	1.10606
-20.0	1.12701	0.00286	1.12414	1.12988	1.12129	1.13273	1.11942	1.13460
~~-15.0~~	~~1.15448~~	~~0.00244~~	~~1.15203~~	~~1.15692~~	~~1.14961~~	~~1.15935~~	~~1.14801~~	~~1.16095~~
-10.0	1.15191	0.00256	1.14934	1.15447	1.14679	1.15702	1.14511	1.15870
-5.0	1.16819	0.00248	1.16571	1.17067	1.16324	1.17314	1.16162	1.17476
0	1.18505	0.00284	1.18221	1.18790	1.17938	1.19073	1.17752	1.19259
5.0	1.19299	0.00284	1.19015	1.19584	1.18732	1.19866	1.18546	1.20053
10.0	1.20685	0.00247	1.20438	1.20932	1.20192	1.21178	1.20030	1.21340
20.0	1.20831	0.00246	1.20585	1.21078	1.20340	1.21323	1.20179	1.21484
40.0	1.22972	0.00310	1.22661	1.23282	1.22353	1.23591	1.22150	1.23794
60.0	1.23648	0.00286	1.23348	1.23920	1.23063	1.24204	1.22876	1.24391
74.0	1.23952	0.00225	1.23726	1.24178	1.23502	1.24402	1.23355	1.24549

MSJ 12/18/95

HOMOGENIZED MODERATOR SPACE

12/19/95

MSJ

% H_2O	KEFF	STD. DEV	68%	CONF.	95%	CONF.	99%	CONF
0	0.37484	0.00110	0.37374	0.37595	0.37265	0.37704	0.37192	0.37776
10	0.65273	0.00237	0.65035	0.65510	0.64799	0.65746	0.64644	0.65901
20	0.81530	0.00241	0.81289	0.81771	0.81049	0.82010	0.80892	0.82167
30	0.92658	0.00268	0.92389	0.92927	0.92122	0.93193	0.91947	0.93369
40	1.01660	0.00281	1.01378	1.01941	1.01099	1.02221	1.00915	1.02405
60	1.13300	0.00282	1.13017	1.13582	1.12737	1.13862	1.12552	1.14047
80	1.20167	0.00240	1.19926	1.20408	1.19687	1.20647	1.19529	1.20804
100	1.23952	0.00225	1.23726	1.24178	1.23502	1.24402	1.23355	1.24549

Borehole Emplaced MPC with 3.75% Enriched Fress Fuel
and No Boron Absorbers Added

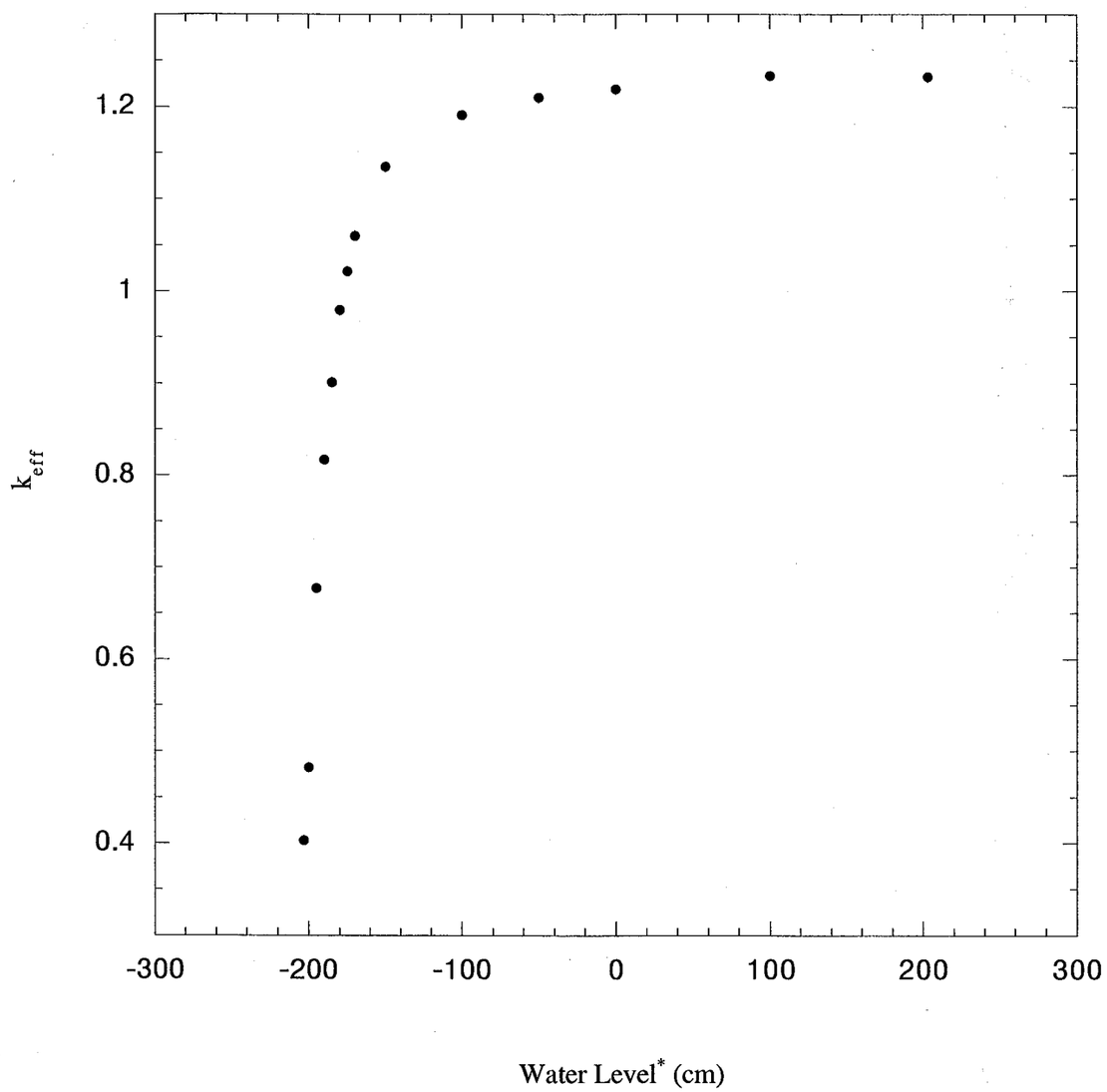

* - Where zero height is at MPC center

Drift Emplaced MPC with 3.75% Enriched Fresh Fuel
and No Boron Absorbers Added

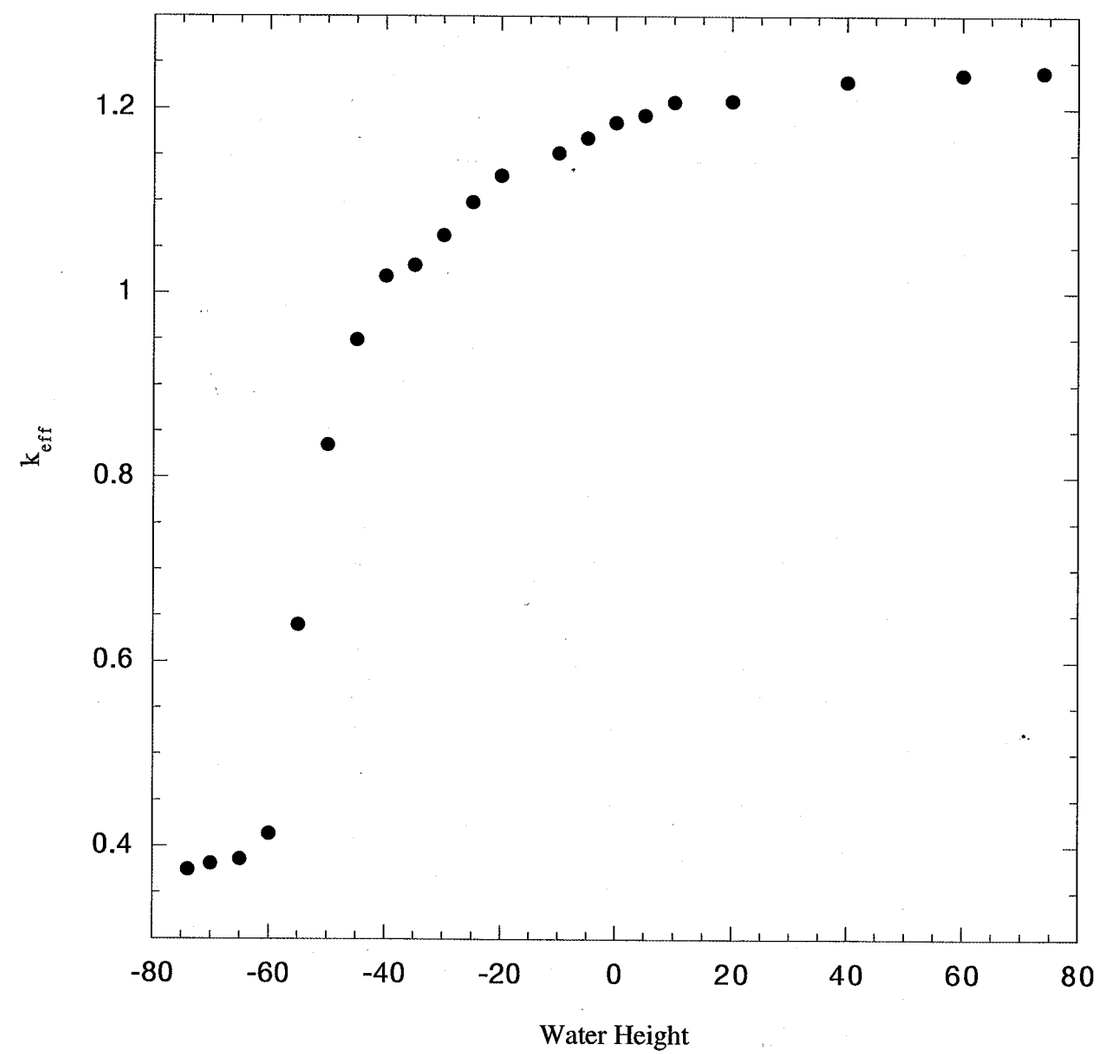

Homogenized Moderator "Mist" MPC with 3.75% Enriched Fresh Fuel and No Boron Absorbers Added

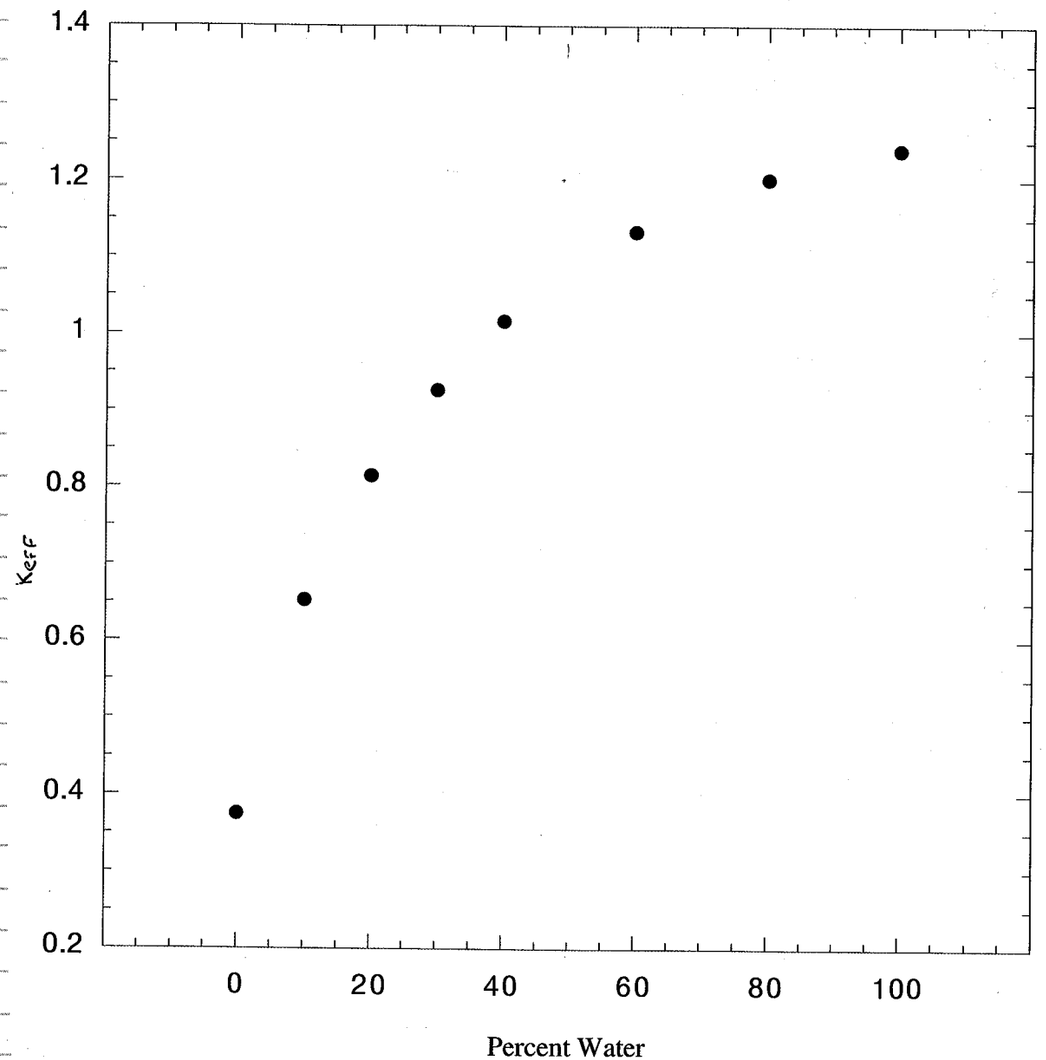

12/21/95 MSJ

CALCULATE THE PERCENT OF VOID SPACE FILLED W/ H_2O FOR THE THREE ARRANGEMENTS (FOR $K_{EFF} = 1$)

A) BOREHOLE EMPLACEMENT

CRITICAL $H_T = -177.9$ cm

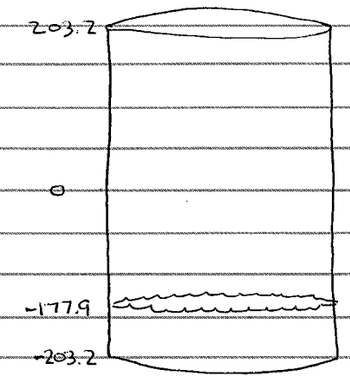

$$\% \text{ FULL} = \frac{\cancel{\pi}(\cancel{r^2})(h_{cr} + 203.2)}{\cancel{\pi}(\cancel{r^2})(2 \times 203.2)} \times 100$$

$$= \frac{(-177.9 + 203.2)}{406.4} \times 100$$

$$= 6.23\ \%$$

B) DRIFT EMPLACEMENT

CRITICAL $H_T = -41.3$ cm

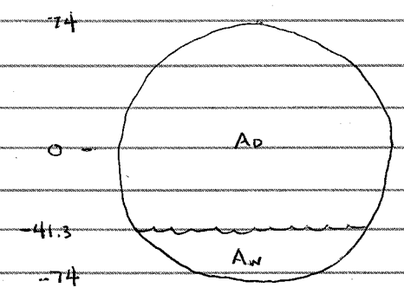

$$\% \text{ FULL} = \frac{\cancel{406.4}\ A_W}{\cancel{406.4}\ \pi r^2}$$

$$A_W = \cancel{\int_{-74}^{-41.3} \int_0^{(74^2 - y^2)^{1/2}} dx\,dy}$$ 12/19/95 MSJ

$$A_W = \int_{-74}^{-41.3} (74^2 - x^2)^{1/2}\,dx = \cancel{74^2 x - \tfrac{1}{3} x^3 \Big|_{-74}^{-41.3}}$$ 12/19/95 MSJ

$= 1{,}411.7\ cm^2$ (EVALUATED USING HP48G CALCULATOR)

$$\cancel{= 74^2(-41.3) - \tfrac{1}{3}(-41.3)^3 - 74^2(-74) + \tfrac{1}{3}(-74)^3}$$
$$\cancel{= -226{,}158.80 + 23{,}481.67 + 405{,}224.00 - 135{,}074.67}$$
$$\cancel{= 472{,}826.47 \text{ cm}^2}$$

12/19/95 MSJ

$$\% \text{ FULL} = \frac{1{,}411.7}{\pi (74)^2} \times 100$$
$$= 8.21 \% \text{ FULL}$$

c) MISTING CALCULATION

% FULL = 38.16 (FROM LINEAR INTERPOLATION)

12/21/95 MSJ

TIME DEPENDENT FUEL CALCULATIONS - FLOODED MPC

AGE OF FUEL (YR)	K_{eff}	STD. ERROR
10	0.42195	0.00146
100	0.39556	0.00147
1,000	0.39977	0.00120
10,000	0.38985	0.00121

6/18/96 3.75% FUEL w/ 33GWd/MTIHM BURNUP

MSJ BOREHOLE EMPLACED (VIRTICLE)

WATER Ht (cm)	Keff	STD DEV	68%	CONF	95%	CONF	99%	CONF
-203.2	0.34511	0.00118	0.34393	0.34629	0.34277	0.34746	0.34200	0.34822
-175.0	0.53435	0.00202	0.53233	0.53033	0.53836	0.53836	0.52902	0.53967
-150.0	0.62669	0.00205	0.62464	0.62874	0.62261	0.63077	0.62128	0.63210
-125.0	0.66879	0.00205	0.66674	0.67084	[illegible]	0.67288	0.66337	0.67421
-100.0	0.69146	0.00282	0.68864	[illegible]	0.68584	0.69708	0.68399	0.69893
-50.0	0.72105	0.00224	0.71880	0.72330	0.71657	0.72553	0.71510	0.72700
0								
100.0	0.73959	0.00264	0.73694	0.74223	0.73431	0.74486	0.73257	0.74660
203.2								
-203.2	0.35846	0.00116	0.35730	0.35962	0.35615	0.36078	0.35539	0.36153
-175.0	0.86543	0.00206	0.86356	0.86769	0.86152	0.86973	0.86018	0.87107
-150.0	0.96276	0.00198	0.96077	0.96475	0.95881	0.96671	0.95752	0.96800
-125.0	1.00196	0.00200	0.99996	0.00396	0.99798	1.00593	0.99668	1.00723
-100.0	1.00949	0.00208	0.00740	1.01158	1.00534	1.01364	1.00398	1.01500
-50.0	1.02063	0.00264	1.01798	1.02328	1.01535	1.02591	1.01362	1.02764
0	1.02741	0.00293	1.02448	1.03034	1.02157	1.03325	1.01965	1.03517
100.0	1.03657	0.00286	1.03370	1.03943	1.03086	1.04227	1.02899	1.04415
203.0	1.04473	0.00291	1.04181	1.04766	1.03889	1.05058	1.03694	1.05253

WRONG FUEL WAS USED

SETENV ORIGEN2_HOME /HOME2/ALOZANO/ORIGEN2

3.75% FUEL w/ 33GWd/MTIHM BURNUP

DRIFT EMPLACED (HORIZONTAL)

WATER Ht (cm)	~~WATER~~ Keff	STD DEV	68%	CONF	95%	CONF	99%	CONF
-74.0	0.32417	0.00111	0.32306	0.32529	0.32195	0.32640	0.32122	0.32713
-70.0	0.33323	0.00122	0.33201	0.33444	0.33080	0.33565	0.33000	0.33645
-65.0	0.33642	0.00144	0.33488	0.33787	0.33355	0.33830	0.33260	0.34024
-60.0	0.36056	0.00139	0.35917	0.36195	0.35779	0.36333	0.35688	0.36423
-55.0	0.54576	0.00213	0.54363	0.54790	0.54151	0.55002	0.54011	0.55142
-50.0	0.70335	0.00265	0.70069	0.70600	0.69806	0.70863	0.69632	0.71073
-45.0	0.79801	0.00273	0.79528	0.80075	0.79256	0.80347	0.79078	0.80525
-40.0	0.86427	0.00288	0.86138	0.86716	0.85851	0.87003	0.85662	0.87192
-30.0	0.89028	0.00328	0.88699	0.89357	0.88327	0.89683	0.88157	0.89898
-20.0	0.95244	0.00244	0.95000	0.95489	0.94756	0.95732	0.94596	0.95893
-10.0	0.98007	0.00264	0.97823	0.98352	0.97560	0.98614	0.97387	0.98787
0	0.00044	0.00248	0.99796	0.00292	0.99550	0.00538	0.99388	0.00700
10	1.01631	0.00217	1.01413	1.01848	1.01196	1.02065	1.01054	1.02207
25	1.02904	0.00264	1.02640	1.03169	1.02377	1.03432	1.02204	1.03605
50	1.04361	0.00295	0.04065	1.04657	1.03772	1.04950	1.03578	1.05144
74	1.04344	0.00262	1.04081	1.04607	1.03819	1.04868	1.03648	1.05040
HOMOGENIZED MODERATOR SPACE (MISTED)								
0%								
10	0.52717	0.00176	0.52541	0.52894	0.52365	0.53069	0.52250	0.53185
20	0.64772	0.00228	0.64543	0.65001	0.64316	0.65228	0.64166	0.65378
30	0.75001	0.00269	0.74732	0.75271	0.74465	0.75538	0.74289	0.75714
40	0.82175	0.00275	0.81900	0.82451	0.81627	0.82724	0.81447	0.82904
50	0.88476	0.00289	0.88187	0.88766	0.87900	0.89053	0.87711	0.89242
70	0.97012	0.00280	0.96732	0.97293	0.96453	0.97571	0.96270	0.97755
80	0.99835	0.00283	0.99552	0.00118	0.99271	1.00339	0.99086	1.00584
100	1.04344	0.00262	1.04081	1.04607	1.03819	1.04868	1.03648	1.05040

I have reviewed this scientific notebook and find it complies with the requirements in QAP-001. There is sufficient detail for an equally qualified technical person to repeat the work.

RG Baca, EM/PA 3/3/97