The Framatome ANP Indirect Cycle VHTR

Approach to Meeting NRC Containment Functional Requirements

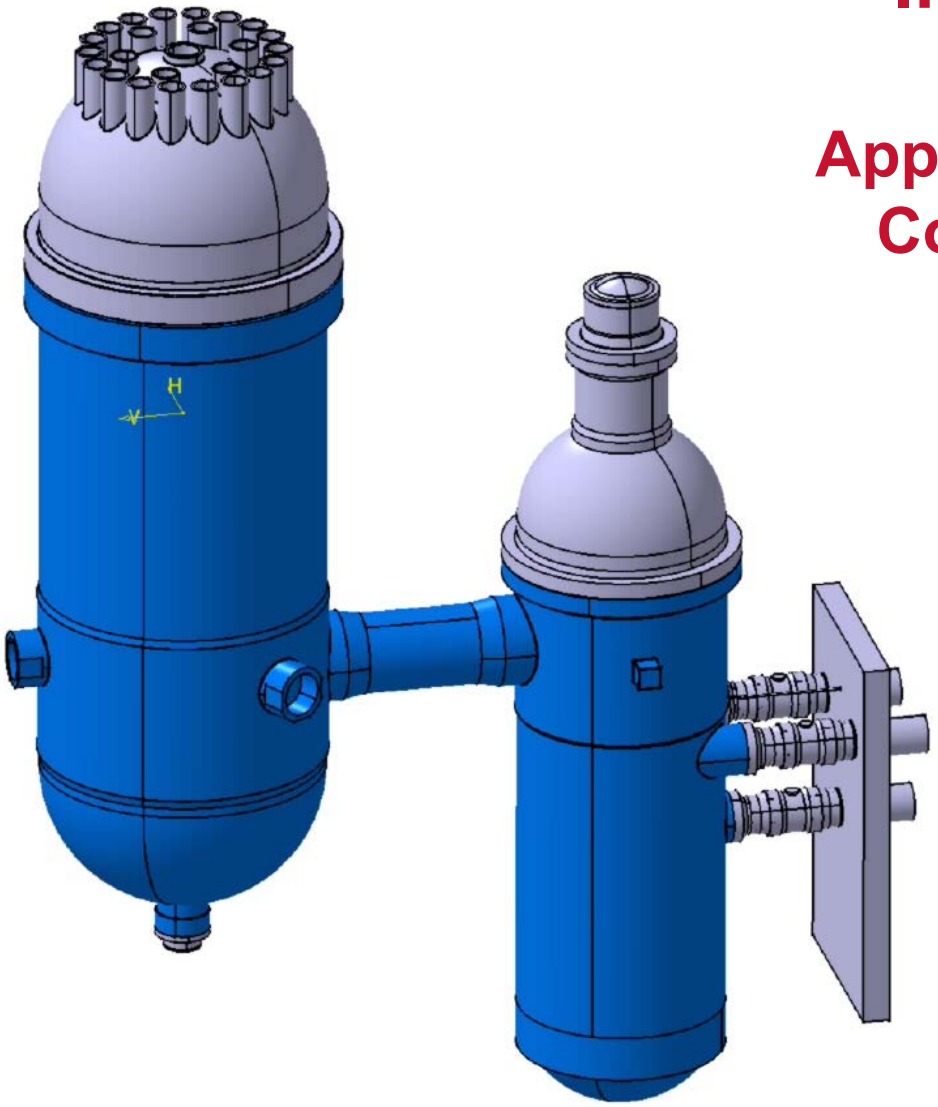

NRC Workshop
on Non-LWR Containment
Functional Requirements
Rockville MD
January 14, 2004

Agenda

- *Framatome ANP commitment to HTGR's*
- *Indirect cycle VHTR design*
- *Approach to address containment functional requirements*

Framatome ANP Has Been Pursuing HTGR's

- Framatome ANP is committed to nuclear power today and tomorrow
- Framatome ANP has been working on HTGRs for over 20 years with European and US companies
- Framatome ANP has been developing a commercial VHTR in the modular HTGR family
- The planned DOE Next Generation Nuclear Plant (NGNP) is synergistic
  - Cogenerate Hydrogen and Electricity
  - Kick-start new nuclear plant construction in the U.S.
  - Develop nuclear reactor technology capable of satisfying U.S. investment and licensing criteria for new commercial reactor orders

Framatome ANP Is Committed to HTGR's

- *Pioneering German experience on modular HTGR's*
- *Active participant in the U.S./Russian GT-MHR Pu disposition program*
- *Leading several of the EC HTR program tasks*
- *Independently performing significant HTGR research, development, and design with the intent to commercialize the technology*
- *2004 HTGR budget of $26M with a professional staff greater than 100*

Framatome ANP VHTR Design Builds on US Modular HTGR

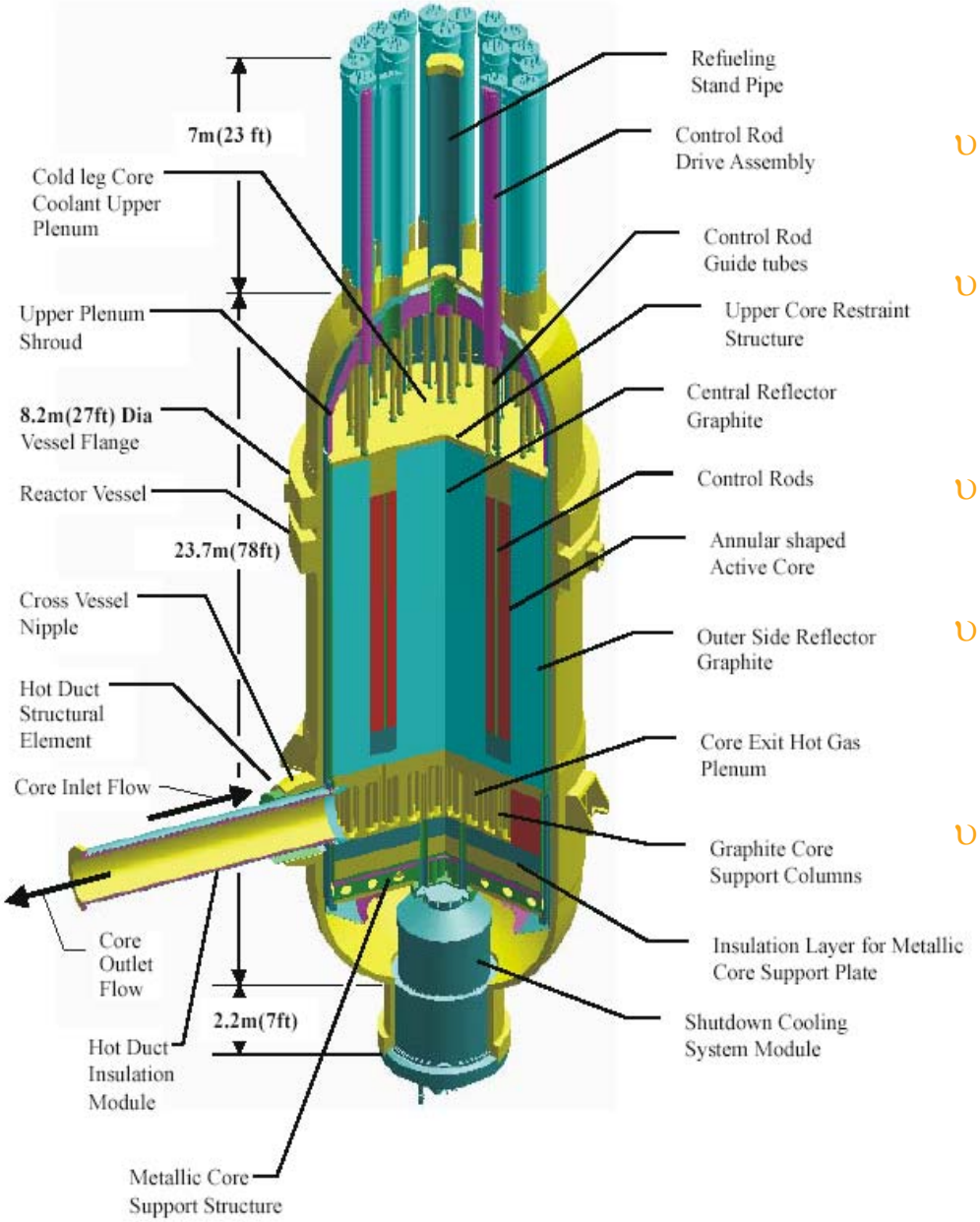

- *TRISO fuel*
- *Prismatic fuel elements*
- *Annular core*
- *Intrinsic reactor shutdown*
- *Passive heat removal*

FRAMATOME ANP

Indirect Cycle VHTR Can Supply Energy to a Spectrum Of Applications

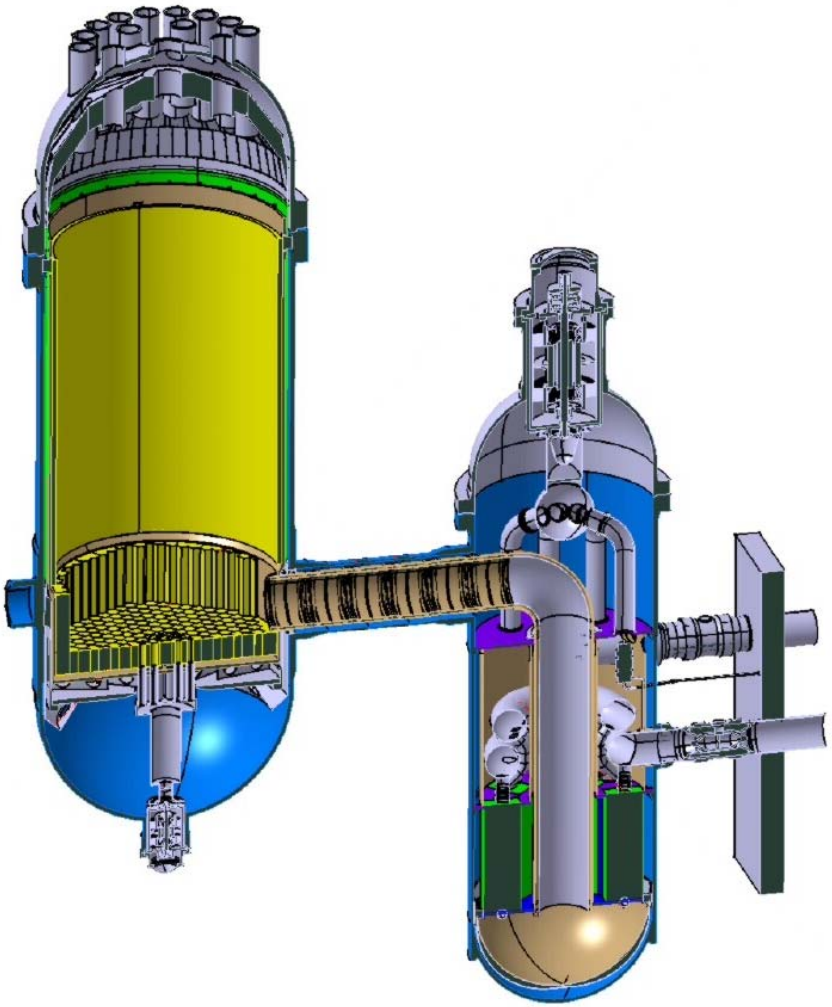

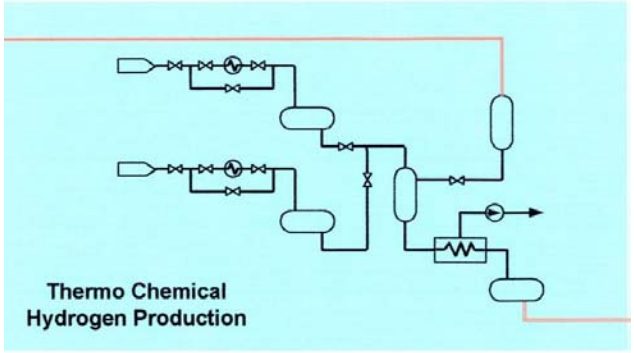

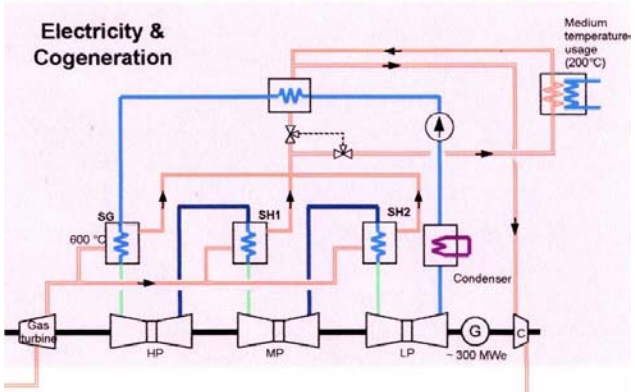

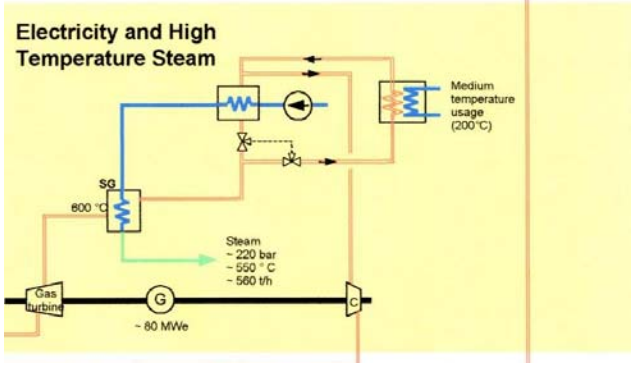

FRAMATOME ANP

NGNP Arrangement with Electricity and Hydrogen Cogeneration

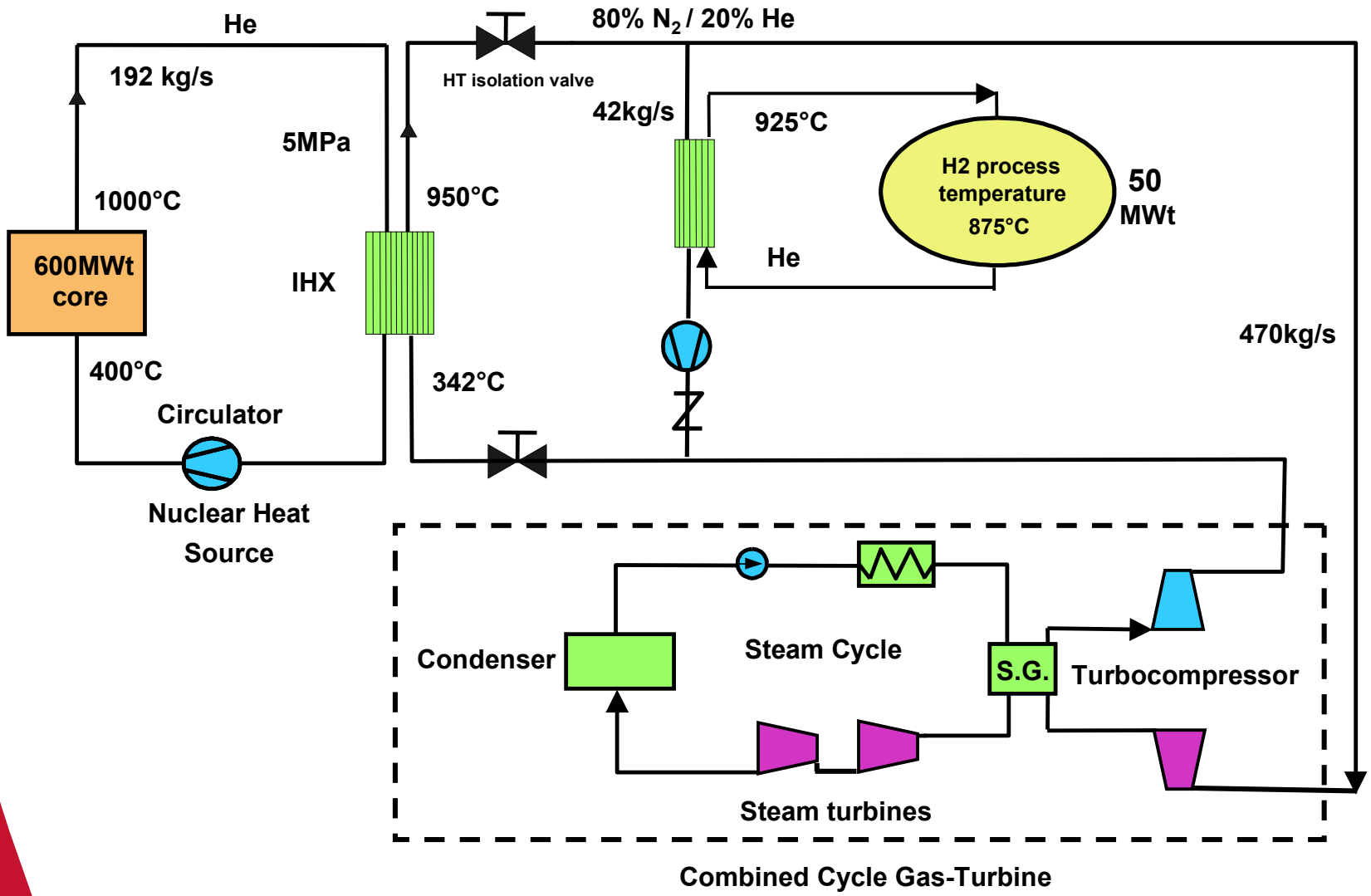

FRAMATOME ANP

Key System Parameters for Indirect NGNP

NGNP Parameter	Baseline Value
Reactor Power	600 MWt
Reactor Outlet Temperature	1000°C
Reactor Inlet Temperature	400°C
Max. Fuel Temp. Guideline – Operating – Accident	1300°C 1600°C
Primary Fluid	Helium
Primary Coolant Pressure	5 MPa
Primary Coolant Flow Rate	192 kg/s
IHX Secondary Outlet Temperature	950°C
Secondary Fluid	80% N_2 / 20% He
Secondary Coolant Pressure	5 MPa
Heat Transport Coupling Fluid	Helium
Target Process Fluid Temperature	875°C

Elements of VHTR Approach to Meeting Containment Functional Requirements

- *Approach is consistent with "mechanistic containment system" approach described by NRC in November 2003 workshop*
- *Utilizes a risk-informed approach to defense-in-depth appropriate for existing and advanced reactors described in November workshop*
- *Compatible with licensing approach followed by MHTGR and PBMR*
  - *Risk-informed selection of LBEs and safety-related SSCs*
  - *Selection of appropriate reactor-specific safety functions*
  - *Commitment to address requirements derived from SECY 03-0047*

Elements of VHTR Licensing Approach

- **Top Level Regulatory Requirements (TLRC) establish *what* must be achieved**
- **Licensing Basis Events (LBEs) define *when* the TLRC must be met**
- **Regulatory design criteria (RDC) and safety-related equipment classification establish *how* it will be assured that the TLRC are met**
- **Design conditions for and special treatment of safety-related SSC provide assurance as to *how well* the TLRC are satisfied**
- **The above elements, in addition to forming the licensing basis, can be used to determine the applicable regulatory requirements which will establish the *scope* of information to be provided in the license application**

VHTR Licensing Approach

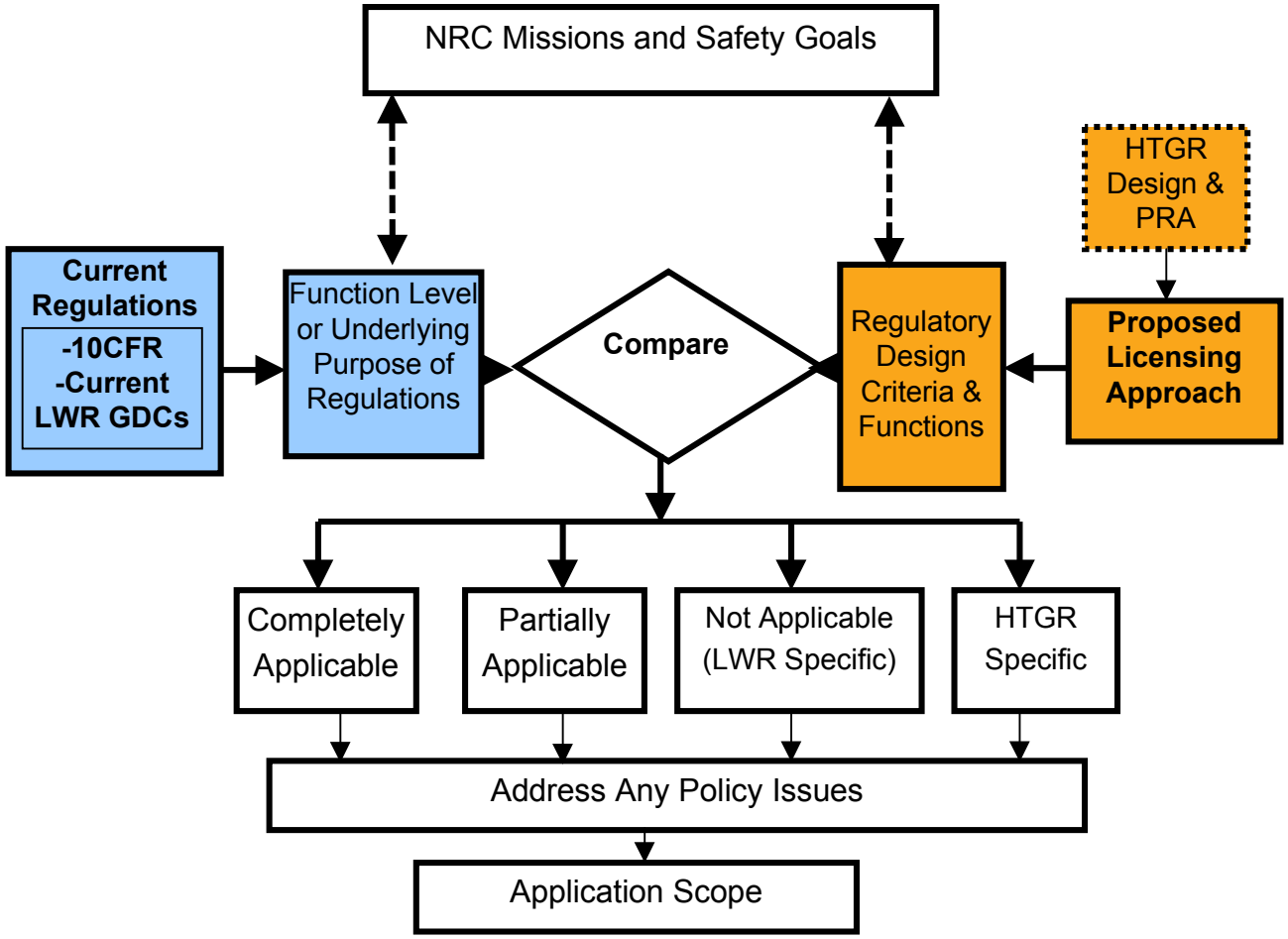

FRAMATOME ANP

Elements of Defense-in-Depth Framework

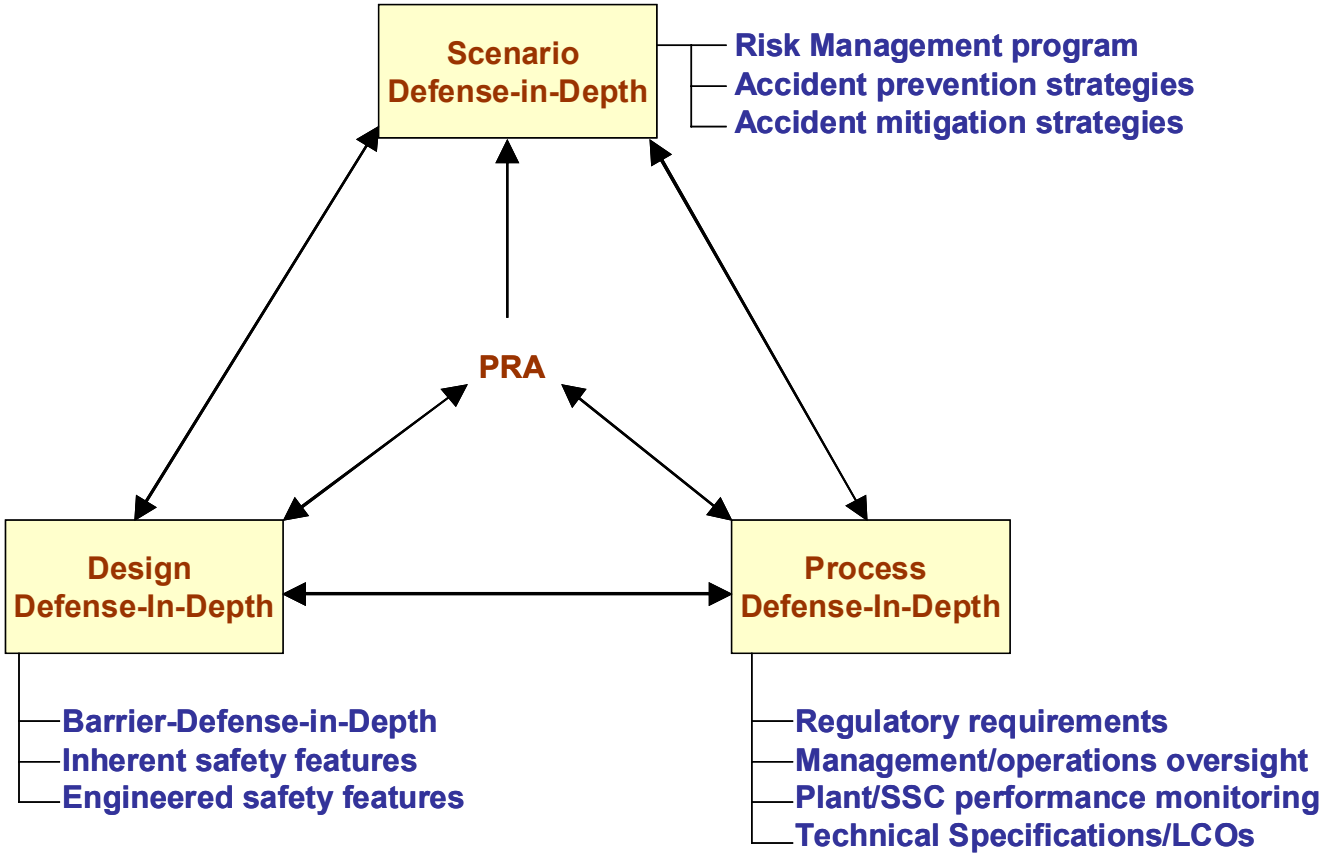

PRA – Probabilistic Risk Assessment
RM – Risk Management

LCO – Limited Condition for Operation
SSC – Structure, System, Component

FRAMATOME ANP

Design Defense-In-Depth

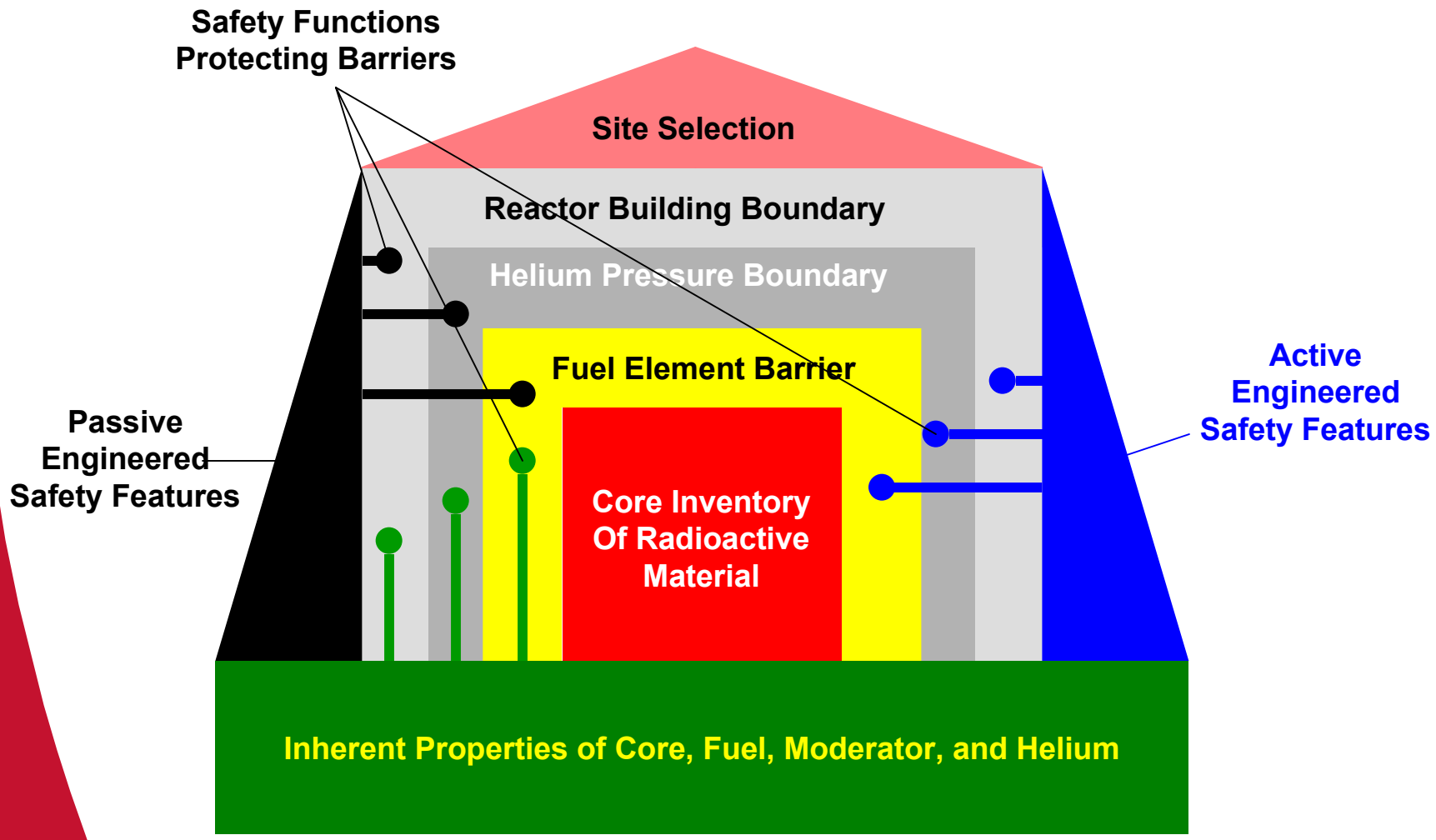

FRAMATOME ANP

Safety Design Approach for Framatome ANP VHTR

- *Multiple, independent, and concentric barriers to fission product release*
  - *Fuel particles*
  - *Fuel rod matrix and element graphite (effective for non-gaseous nuclides)*
  - *Helium Pressure Boundary (HPB)*
  - *Reactor building*
- *Safety functions to ensure barrier integrity across a spectrum of licensing basis events*
  - *Required safety functions for design basis accidents*
  - *Supportive safety functions for beyond design basis events*
- *Inherent safety features (ceramic fuel, graphite moderator, helium coolant) to prevent large releases from the fuel and support other safety functions*
- *Passive and active engineered safety features provide safety functions*
  - *Safety-related SSCs providing required safety functions*
  - *Non safety-related SSCs providing supportive safety functions*
- *Probabilistic and deterministic safety analyses using mechanistic source terms to demonstrate that NRC requirements are met*

Definition of Reactor-Specific Safety Functions

- *At the highest level, NPP safety functions are generic*

- *However, definition of safety functions supported by specific systems quickly diverge for different reactor types*

- *Modular HTGRs rely on passive design selections for radionuclide retention within high quality fuel and passive heat removal capability*
  - *this eliminates need for some LWR safety functions (e.g., coolant inventory control),*
  - *and creates new ones (e.g. control chemical attack)*

- *The safety functions among the different Modular HTGR concepts are quite similar; some differences introduced for prismatic vs. pebble bed fuel, direct vs. indirect cycle, steam cycle vs. Brayton cycle, etc. (e.g., pressure relief functions different for Rankine cycle vs. Brayton cycle)*

Summary of Required VHTR Safety Functions

- Retain radionuclides within fuel particles (passive)
- Control heat generation
  - Control via reactivity feedback (passive)
  - Control via control rods (active)
    - Necessary after a long delay following the onset of an event
  - Control core geometry (passive)
- Control core heat removal
  - Transfer heat from core to reactor vessel (passive)
  - Transfer heat from reactor vessel to environment (passive)
  - Control core geometry (passive)
- Control chemical attack
  - Maintain HPB integrity (passive)

Reactor Building Safety Functions

- ***Required safety functions***
  - ***Structural support for reactor vessel, reactor cavity cooling system and major reactor components; for maintenance of core geometry and passive heat removal***
  - ***Structural protection of reactor vessel, HPB, and safety-related SSCs (to the extent needed to support required safety functions) from loads of internal and external hazards during design basis events***
- ***Supportive safety function provide margin for offsite requirements and an element of defense-in-depth***
  - ***Limit air ingress to control chemical attack***
  - ***Protection of all SSCs from loads for internal and external hazards***
  - ***Provide additional retention thru deposition and other natural phenomena released for any fission products released from HPB***
  - ***Provide shielding for workers and prevent excessive direct shine doses offsite***

Summary

- ***Mechanistic containment system function is provided by the combination of***
  - ***highly reliable and robust fuel particles***
  - ***demonstrated acceptable fuel performance during normal operation and accidents***
  - ***retention of the vast proportion of fission products within the fuel***
  - ***provisions for a highly reliable Helium Pressure Boundary***
    - ***whose performance is not dependent on the performance of the fuel,***
    - ***which retains fission products which may be released from the fuel***
    - ***is designed to prevent excessive air ingress***
  - ***provisions for a reactor building structure***
    - ***whose performance is not dependent on the performance of the fuel or HPB,***
    - ***provides a concentric transport barrier to fission products released from HPB***
    - ***prevents excessive air ingress, and***
    - ***most importantly, structurally maintains core geometry for heat removal and control of heat generation***
- ***Need agreement on the definition of LBEs, methods and codes for calculation of mechanistic source terms, expected fuel performance, and demonstration that requirements are met***
- ***Need agreement on an acceptable approach to defense-in-depth that confirms the acceptability of the mechanistic containment concept***

Additional Insights

- *The term "containment" is only used in the context of the complete mechanistic containment system and is not to be confused with the reactor building*
- *The term "core damage" is not used as it is associated with materials and phenomena not applicable to HTGRs;*
- *It is expected that the definition of licensing basis events and the selection of design basis accidents will include a full treatment of internal events, internal plant hazards, and external events*

Backup Slides on Definition of VHTR Safety Functions

These are presented as representative examples only and are subject to change as the detailed design evolves

Generic Reactor Safety Functions

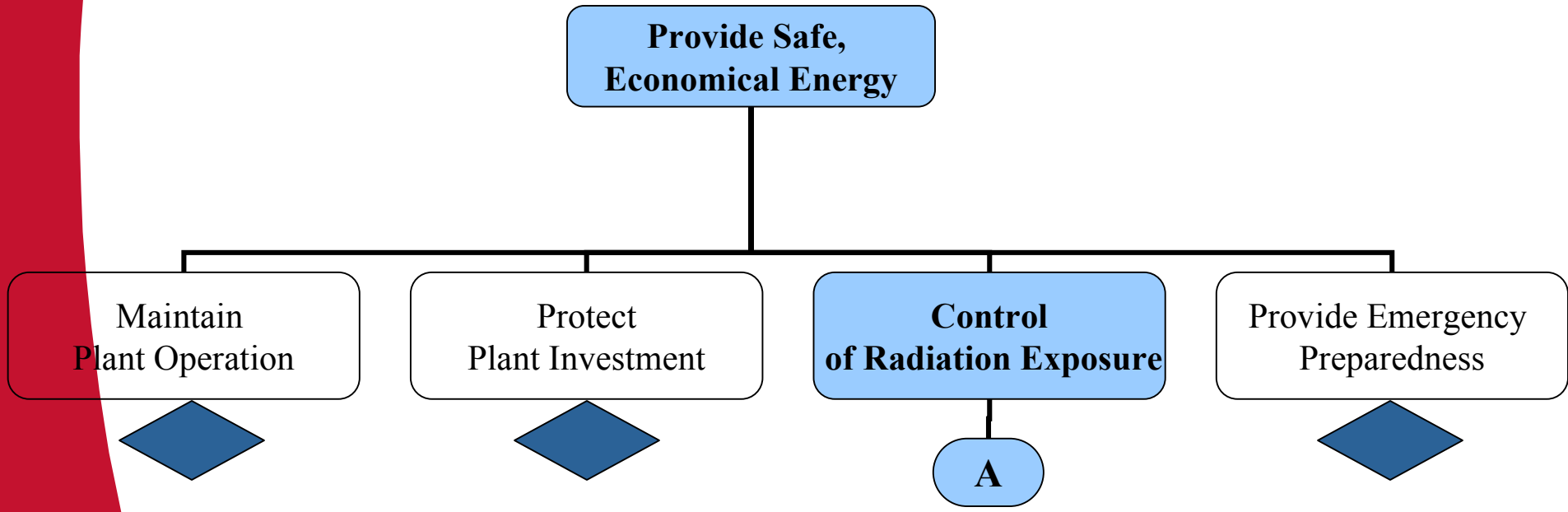

A — Function Tree Transfer

Functions Not Developed Further

FRAMATOME ANP

Generic Reactor Safety Functions

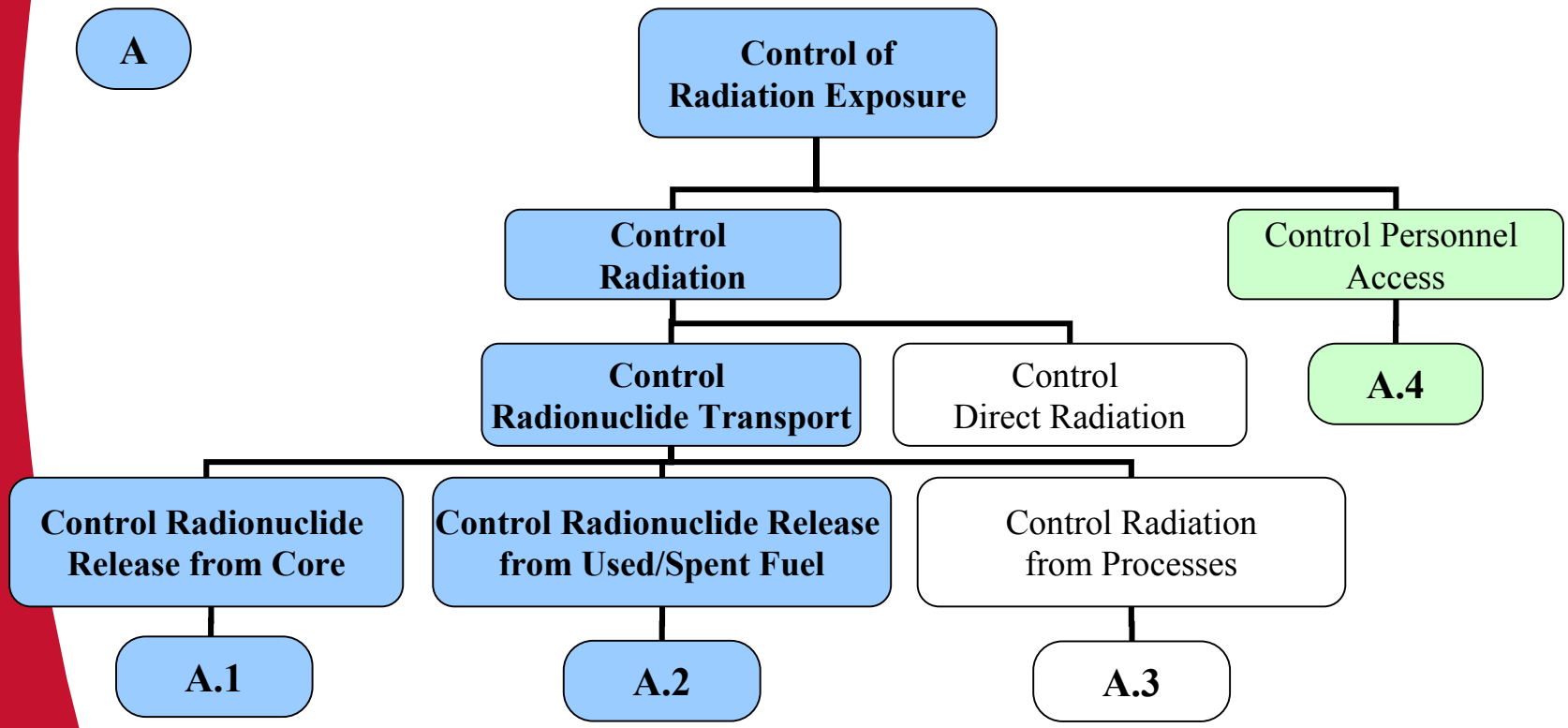

Necessary and sufficient to meet DBE doses for public

Margin for meeting accident doses for public

Necessary to meet normal and accident doses for worker

FRAMATOME ANP

A.1

VHTR Safety Functions

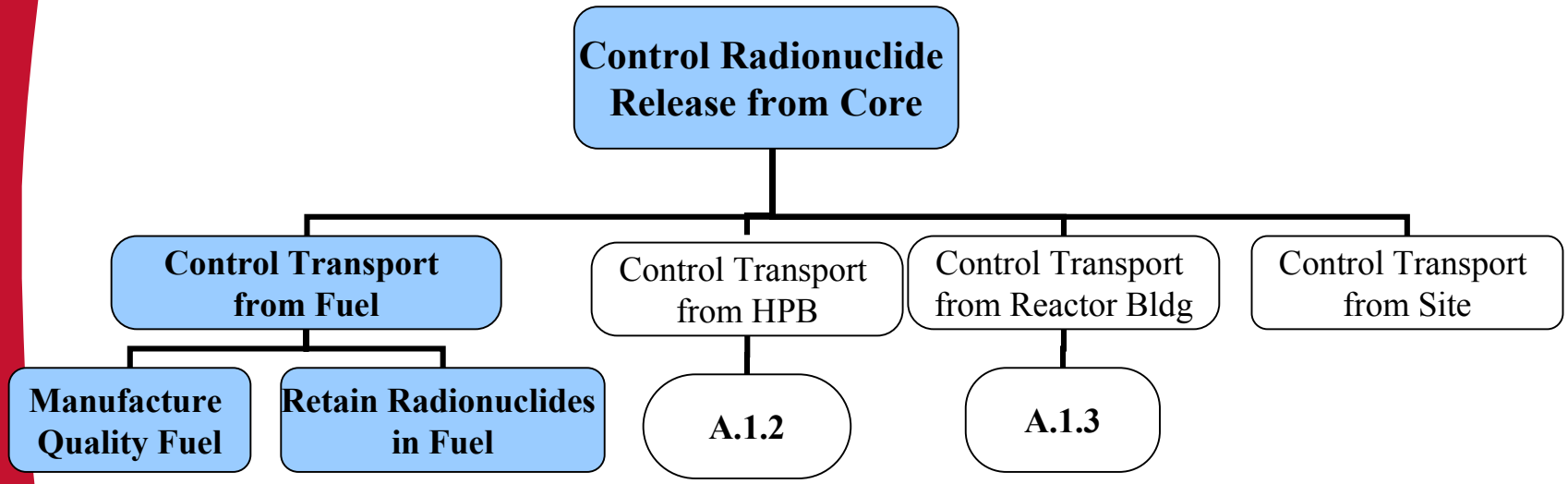

Necessary and sufficient to meet DBE doses for public

Margin for meeting accident doses for public

Necessary to meet normal and accident doses for worker

FRAMATOME ANP

A.1.1

VHTR Safety Functions

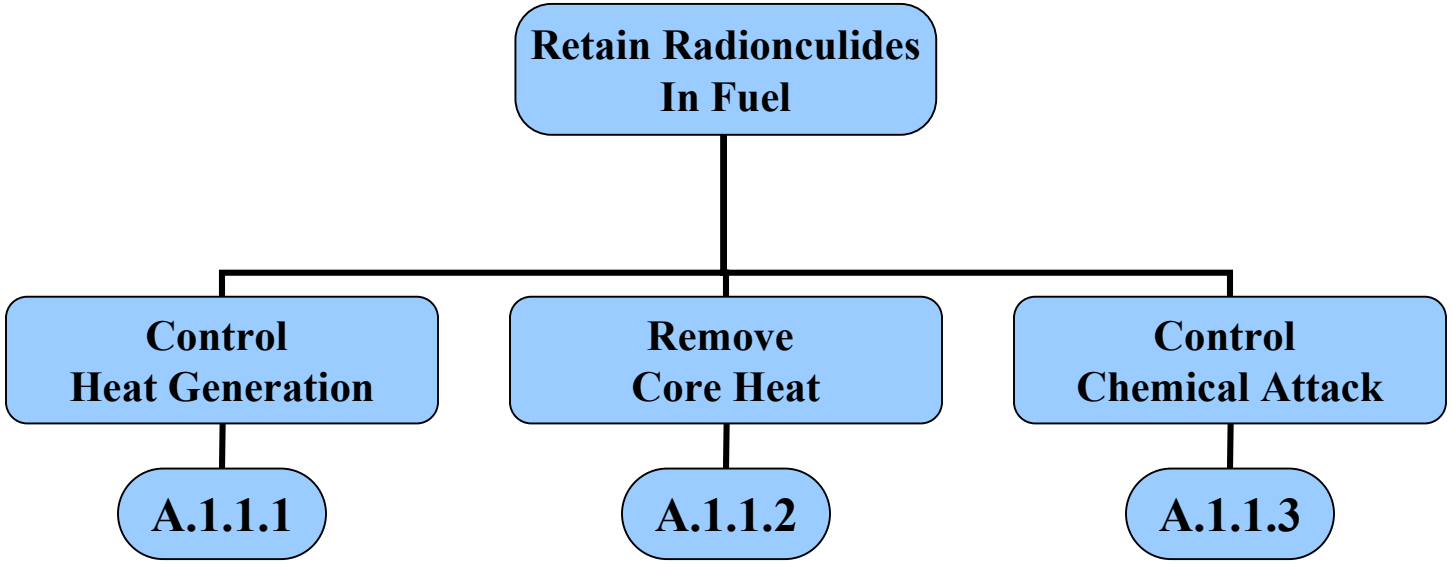

- Necessary and sufficient to meet DBE doses for public
- Margin for meeting accident doses for public
- Necessary to meet normal and accident doses for worker

FRAMATOME ANP

A.1.1.1

VHTR Safety Functions

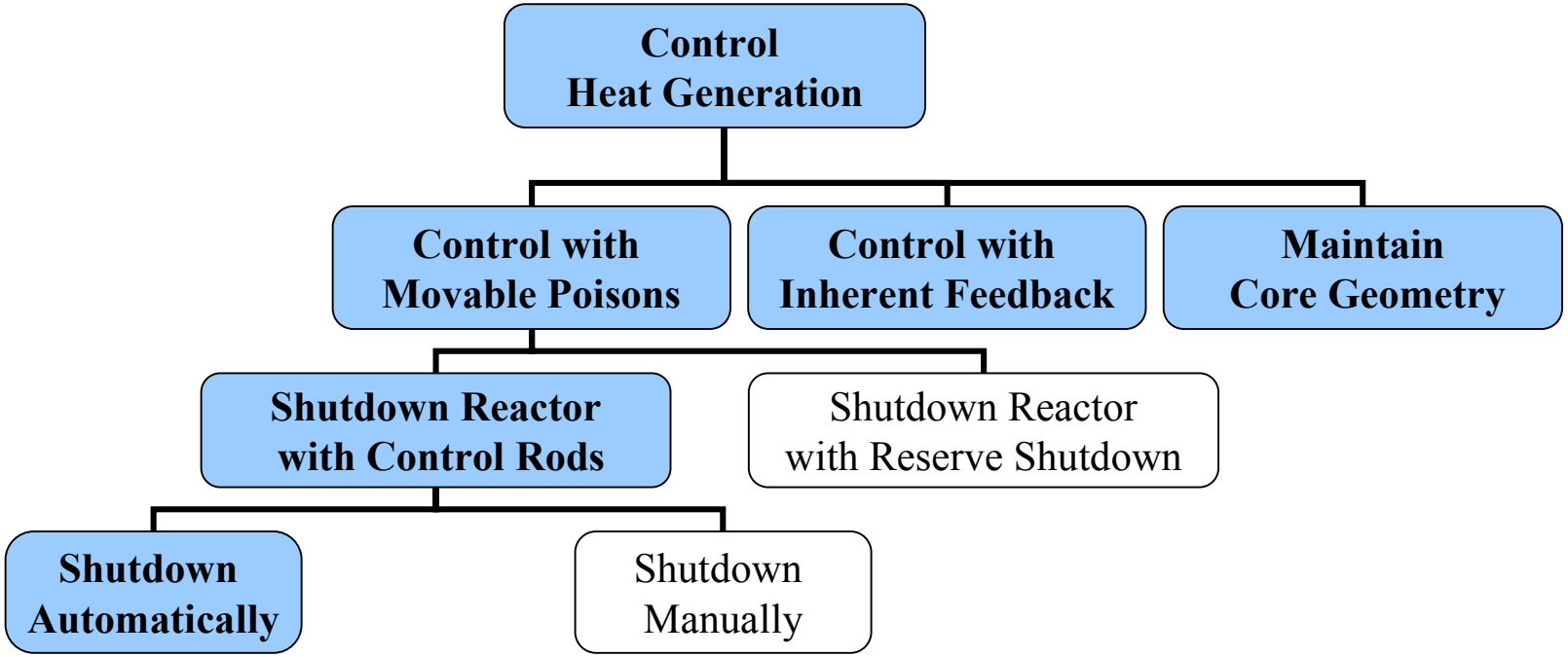

- Necessary and sufficient to meet DBE doses for public
- Margin for meeting accident doses for public
- Necessary to meet normal and accident doses for worker

FRAMATOME ANP

A.1.1.2

VHTR Safety Functions

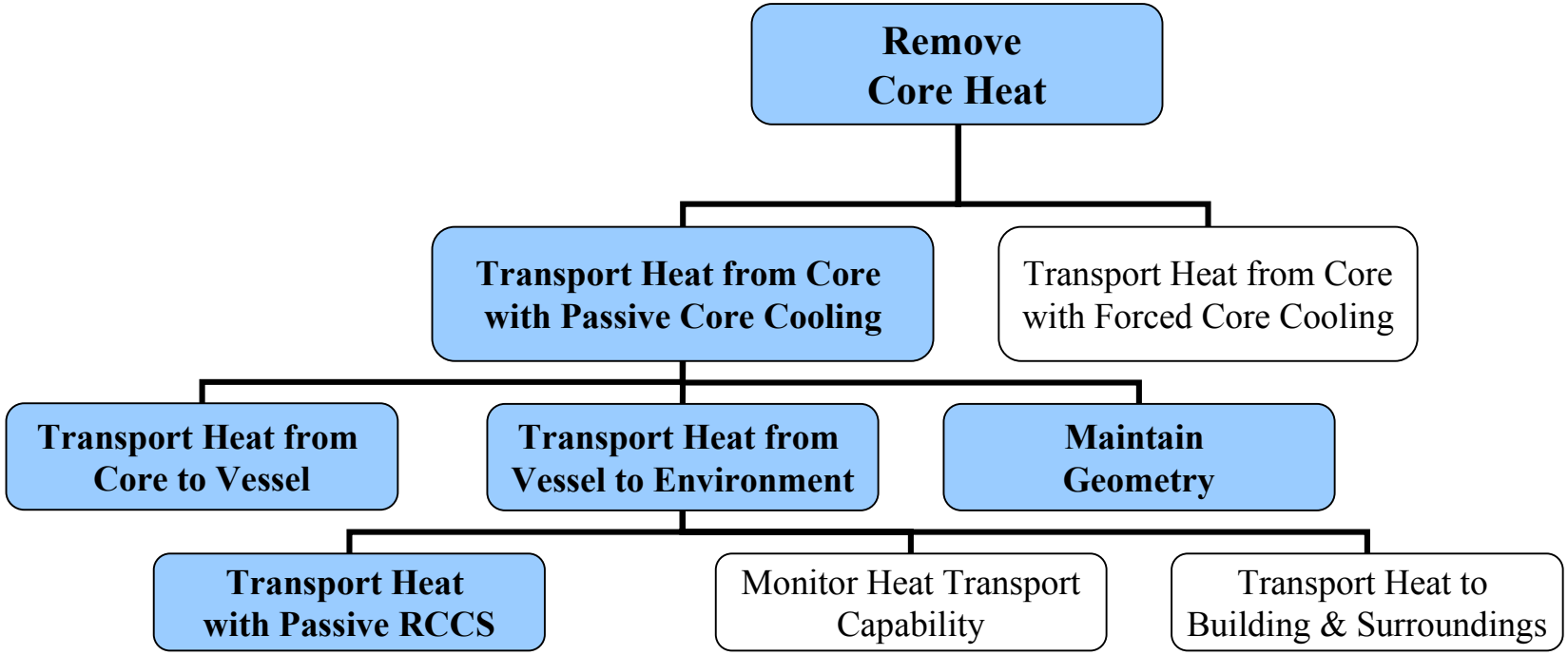

- Necessary and sufficient to meet DBE doses for public
- Margin for meeting accident doses for public
- Necessary to meet normal and accident doses for worker

FRAMATOME ANP

A.1.1.3

VHTR Safety Functions

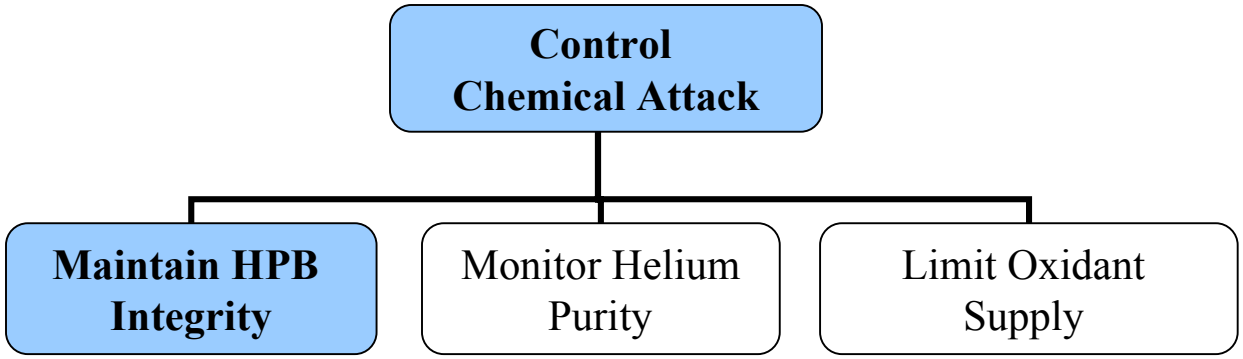

- Necessary and sufficient to meet DBE doses for public
- Margin for meeting accident doses for public
- Necessary to meet normal and accident doses for worker

FRAMATOME ANP

A.1.2

VHTR Safety Functions

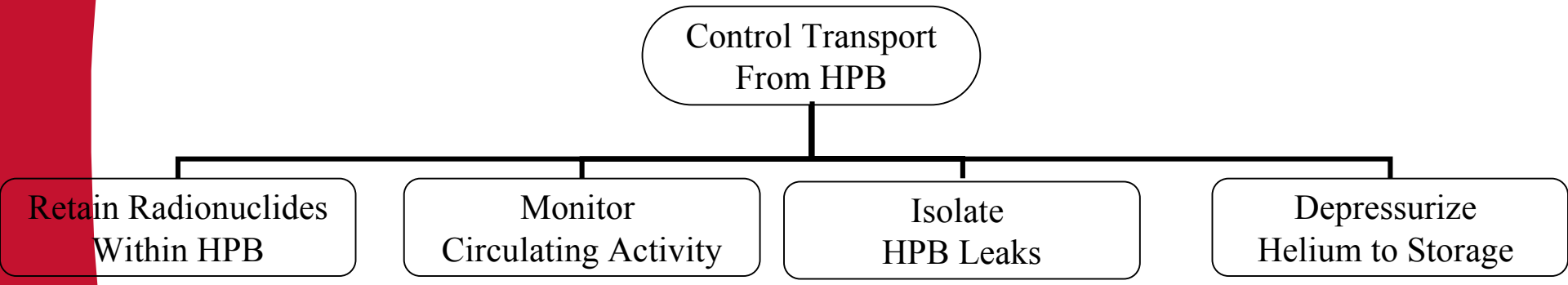

- Necessary and sufficient to meet DBE doses for public
- Margin for meeting accident doses for public
- Necessary to meet normal and accident doses for worker

FRAMATOME ANP

A.1.3

Modular HTGR Safety Functions

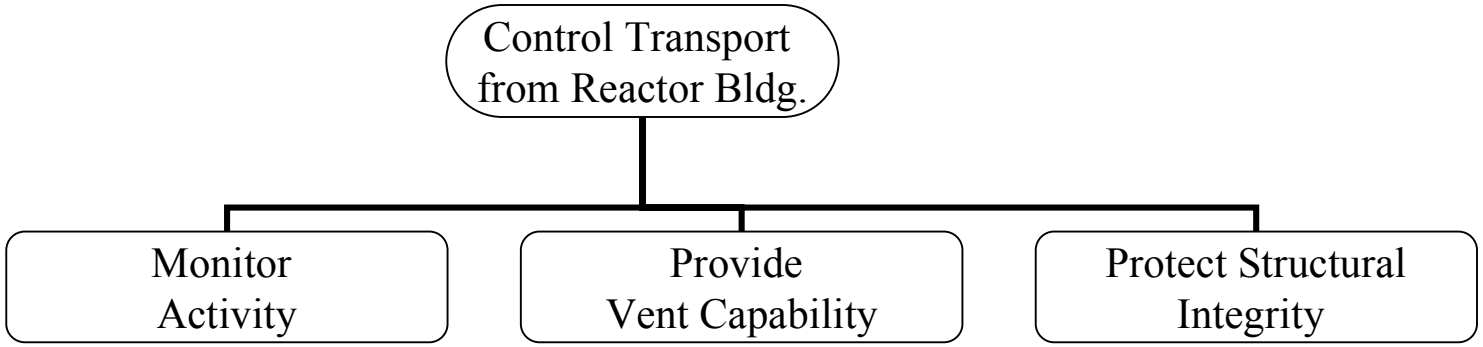

- Necessary and sufficient to meet DBE doses for public
- Margin for meeting accident doses for public
- Necessary to meet normal and accident doses for worker

FRAMATOME ANP