# PBNP ELECTRICAL POWER DISTRIBUTION

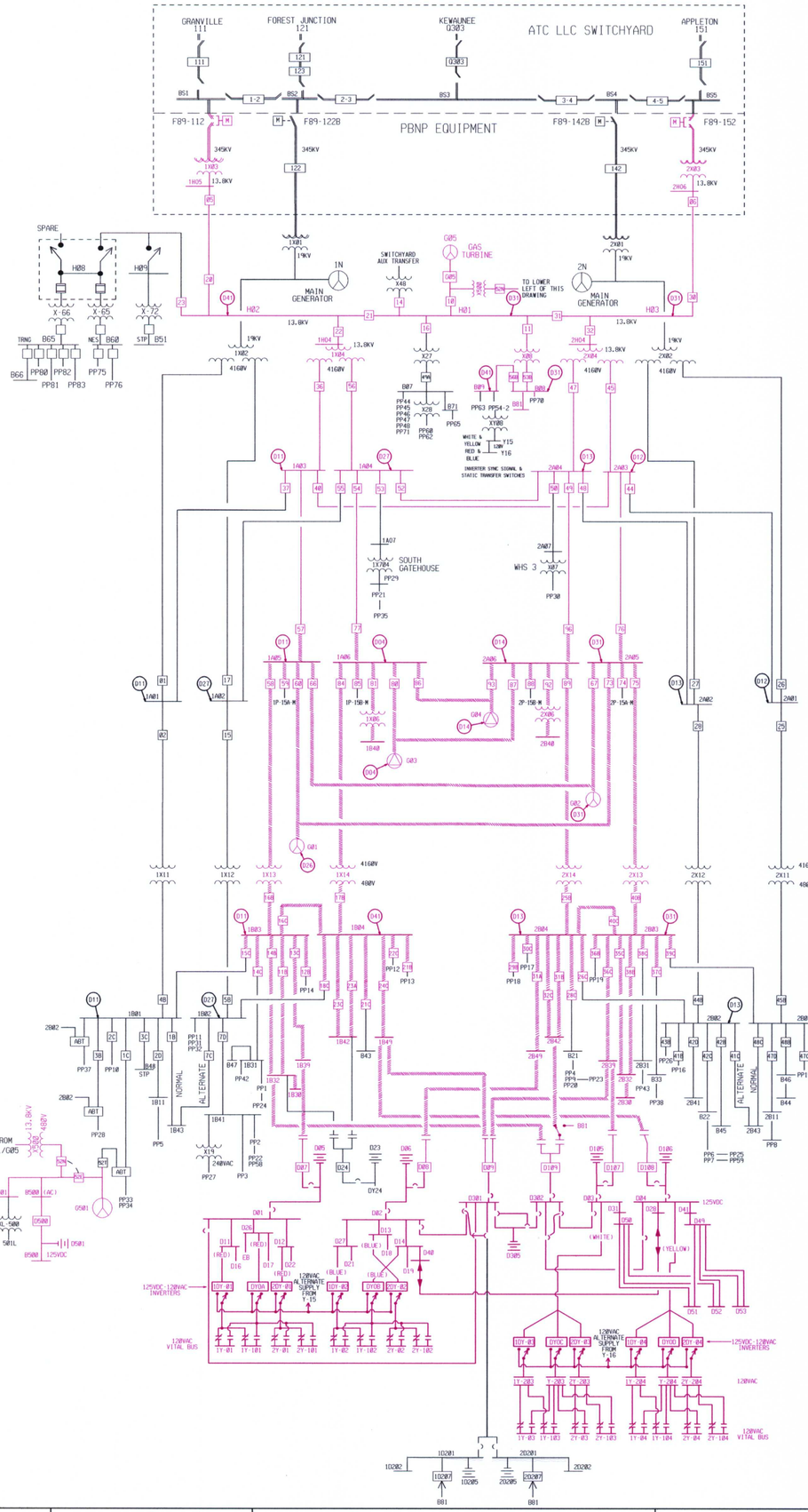


| KEY |
|---|
| BUS CONTROL POWER SUPPLY |
| BATTERY |
| PLANT BREAKERS |
| SWITCHYARD BREAKER |
| SWITCHYARD BUS |
| TRANSFORMER |
| SWITCH N.O. |
| SWITCH N.C. |
| TRANSFER SWITCH |
| GENERATOR DELTA CONNECTED |
| GENERATOR Y-CONNECTED |
| ALL HEAVY LINES ARE SAFETY RELATED |

| COMPONENT/ BUS LETTER | VOLTAGE LEVEL |
|---|---|
| F | 345K VAC |
| <NONE> | 19K VAC |
| H | 13.8K VAC |
| A | 4160 VAC |
| B | 480 VAC |
| D | 125 VDC |

| ABBREV. | MEANING |
|---|---|
| PP- | POWER PANEL |
| X- | TRANSFORMER |
| ABT | AUTOMATIC BUS TRANSFER SW |

D112

**LEGEND**

MAGENTA - IN SCOPE LR

BLACK - NOT IN SCOPE LR

LR-ELECTRICAL-E1
UNIT 1 & 2
ELECTRICAL POWER DISTRIBUTION
REV. 1 DATE:10-17-03