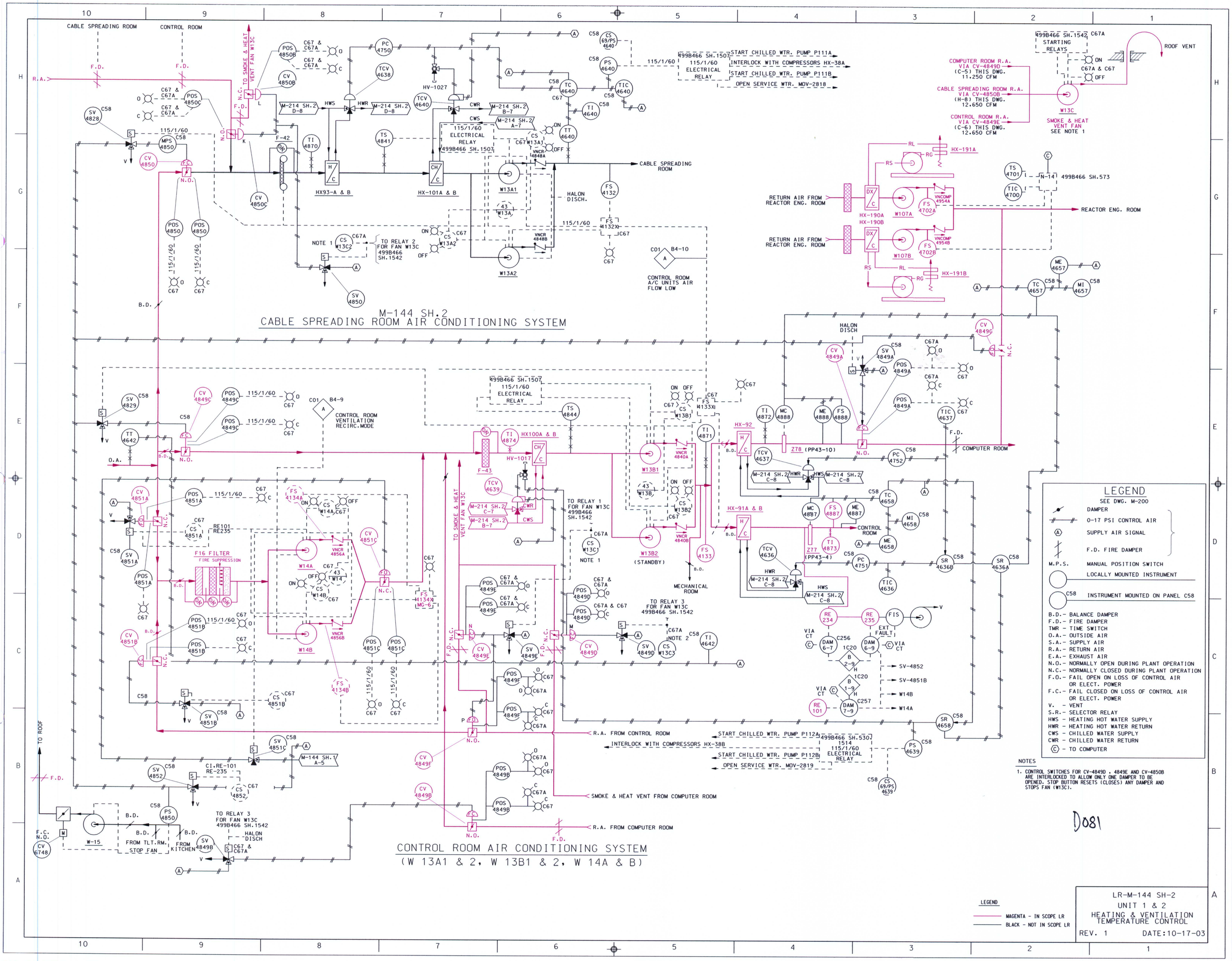

CABLE SPREADING ROOM
CONTROL ROOM
TO SMOKE & HEAT VENT FAN W13C
M-144 SH.2
CABLE SPREADING ROOM AIR CONDITIONING SYSTEM
CONTROL ROOM AIR CONDITIONING SYSTEM
(W 13A1 & 2, W 13B1 & 2, W 14A & B)
HX93-A & B
HX-101A & B
HX-100A & B
HX-92
HX-91A & B
HX-190A
HX-190B
HX-191A
HX-191B
W13A1
W13A2
W13B1
W13B2
(STANDBY)
W14A
W14B
F16 FILTER
FIRE SUPPRESSION
HALON DISCH.
CONTROL ROOM A/C UNITS AIR FLOW LOW
CONTROL ROOM VENTILATION RECIRC.MODE
TO RELAY 1 FOR FAN W13C 499B466 SH.1542
TO RELAY 2 FOR FAN W13C 499B466 SH.1542
TO RELAY 3 FOR FAN W13C 499B466 SH.1542
START CHILLED WTR. PUMP P111A
INTERLOCK WITH COMPRESSORS HX-38A
START CHILLED WTR. PUMP P111B
OPEN SERVICE WTR. MOV-2818
START CHILLED WTR. PUMP P112A
INTERLOCK WITH COMPRESSORS HX-38B
START CHILLED WTR. PUMP P112B
OPEN SERVICE WTR. MOV-2819
499B466 SH.1507 115/1/60 ELECTRICAL RELAY
499B466 SH.1542 STARTING RELAYS
ROOF VENT
COMPUTER ROOM R.A. VIA CV-4849D (C-5) THIS DWG. 11.250 CFM
CABLE SPREADING ROOM R.A. VIA CV-4850B (H-8) THIS DWG. 12.650 CFM
CONTROL ROOM R.A. VIA CV-4849E (C-6) THIS DWG. 12.650 CFM
W13C
SMOKE & HEAT VENT FAN SEE NOTE 1
RETURN AIR FROM REACTOR ENG. ROOM
REACTOR ENG. ROOM
499B466 SH.573
COMPUTER ROOM
CONTROL ROOM
MECHANICAL ROOM
R.A. FROM CONTROL ROOM
SMOKE & HEAT VENT FROM COMPUTER ROOM
R.A. FROM COMPUTER ROOM
TO ROOF
FROM TLT.RM. STOP FAN
FROM KITCHEN
LEGEND
SEE DWG. M-200
DAMPER
0-17 PSI CONTROL AIR
SUPPLY AIR SIGNAL
F.D. FIRE DAMPER
M.P.S. MANUAL POSITION SWITCH
LOCALLY MOUNTED INSTRUMENT
C58 INSTRUMENT MOUNTED ON PANEL C58
B.D.- BALANCE DAMPER
F.D.- FIRE DAMPER
TMR - TIME SWITCH
O.A.- OUTSIDE AIR
S.A.- SUPPLY AIR
R.A.- RETURN AIR
E.A.- EXHAUST AIR
N.O.- NORMALLY OPEN DURING PLANT OPERATION
N.C.- NORMALLY CLOSED DURING PLANT OPERATION
F.O.- FAIL OPEN ON LOSS OF CONTROL AIR OR ELECT. POWER
F.C.- FAIL CLOSED ON LOSS OF CONTROL AIR OR ELECT. POWER
V. - VENT
S.R.- SELECTOR RELAY
HWS - HEATING HOT WATER SUPPLY
HWR - HEATING HOT WATER RETURN
CWS - CHILLED WATER SUPPLY
CWR - CHILLED WATER RETURN
C - TO COMPUTER
NOTES
1. CONTROL SWITCHES FOR CV-4849D , 4849E AND CV-4850B ARE INTERLOCKED TO ALLOW ONLY ONE DAMPER TO BE OPENED. STOP BUTTON RESETS (CLOSES) ANY DAMPER AND STOPS FAN (W13C).
D081
LEGEND
MAGENTA - IN SCOPE LR
BLACK - NOT IN SCOPE LR
LR-M-144 SH-2
UNIT 1 & 2
HEATING & VENTILATION TEMPERATURE CONTROL
REV. 1
DATE:10-17-03