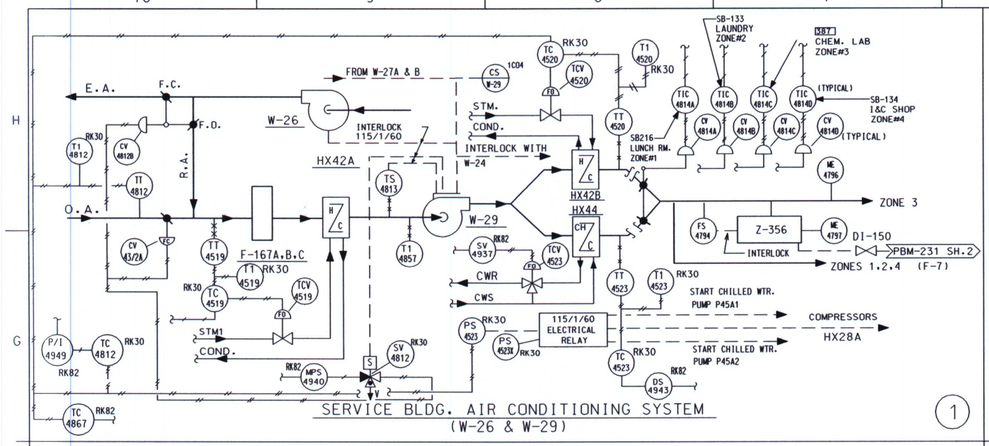

SERVICE BLDG. AIR CONDITIONING SYSTEM
(W-26 & W-29)

1

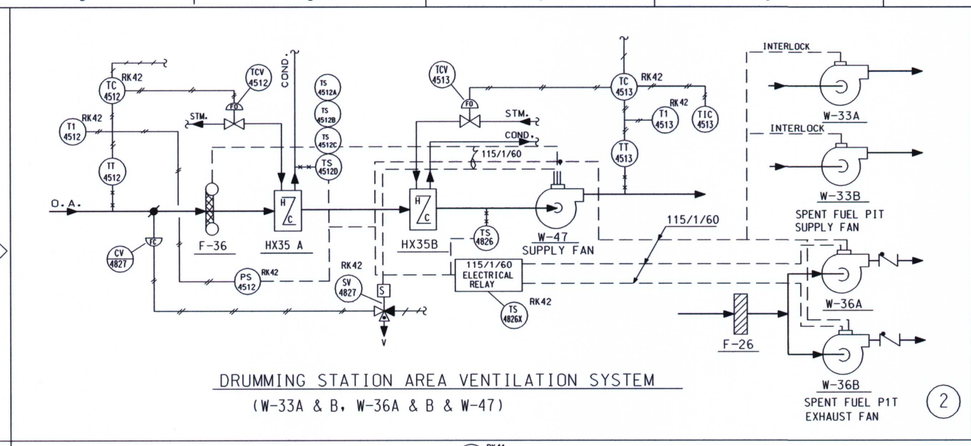

DRUMMING STATION AREA VENTILATION SYSTEM
(W-33A & B, W-36A & B & W-47)

2

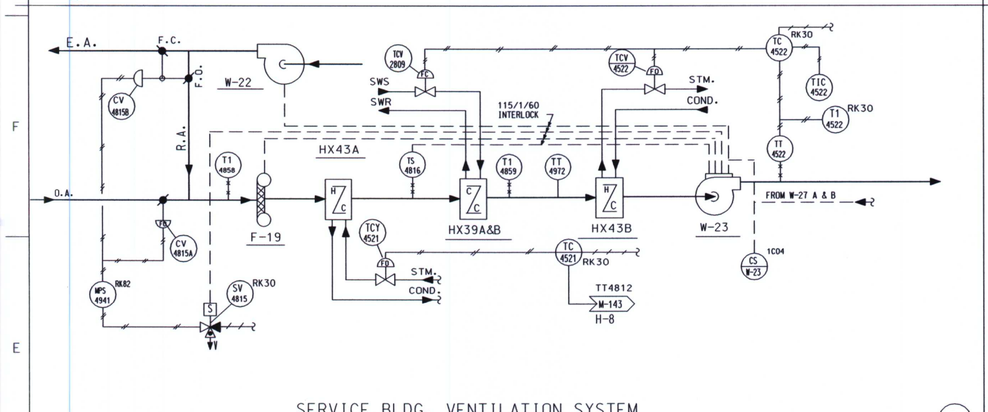

SERVICE BLDG. VENTILATION SYSTEM
(W-22,W-23)

3

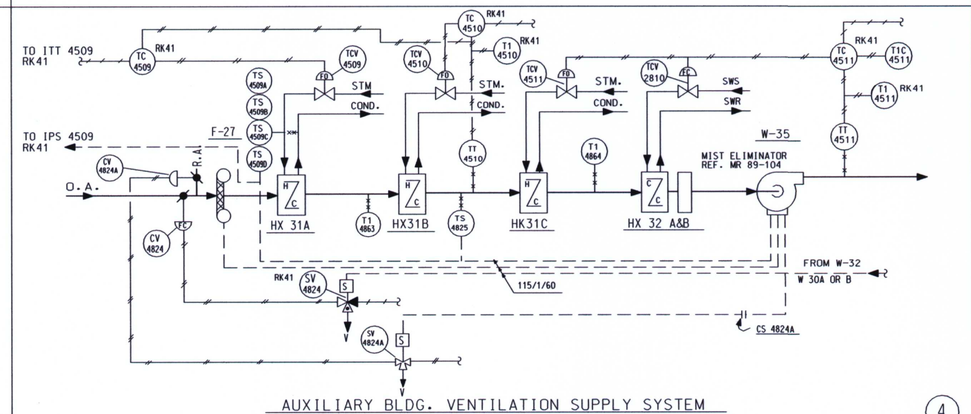

AUXILIARY BLDG. VENTILATION SUPPLY SYSTEM
(W-35)

4

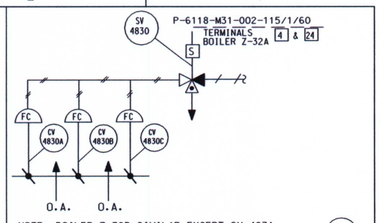

NOTE: BOILER Z-32B SIMILAR EXCEPT SV-4831 & CV-4831A, CV-4831B, CV-4831C

BOILER ROOM COMBUSTION AIR DAMPERS

9

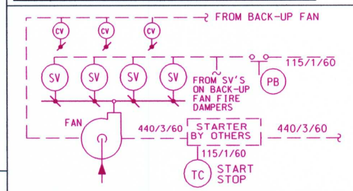

PB	FAN	TEMPERATURE CONTROLLER TC	INLET (CV) (LOUVERS/ DAMPERS)	OUTLET (SV) (FIRE CURTAINS)
4 8 8 3	W-12A	6636	MOTOR OPERATED 4173 4174 4175	4883A 4883B 4883C 4883D
	W-12B	6637	INDUCED DRAFT 4151A 4151B 4151C	4883E 4883F 4883G 4883H
4 8 8 4	W-12C	6638	MOTOR OPERATED 4176 4177 4178	4884A 4884B 4884C 4884D
	W-12D	6639	INDUCED DRAFT 4151D 4151E 4151F	4884E 4884F 4884G 4884H

DIESEL GENERATOR ROOM EXHAUST FANS

10

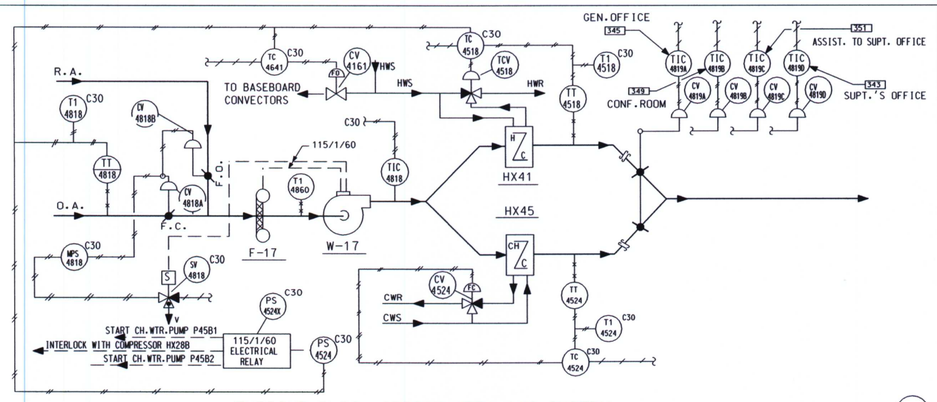

TURBINE BLDG. OFFICE AREA A/C SYSTEM
(W-17)

5

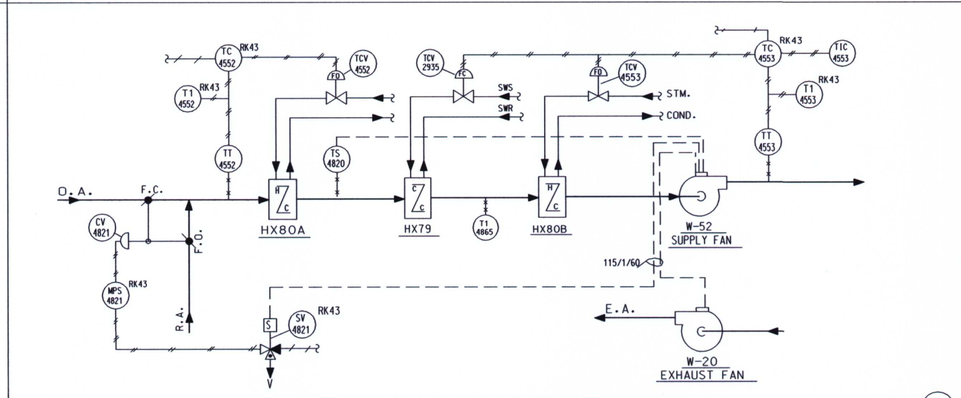

WATER TREATMENT AREA VENTILATION SYSTEM
W-52 AND W-20

6

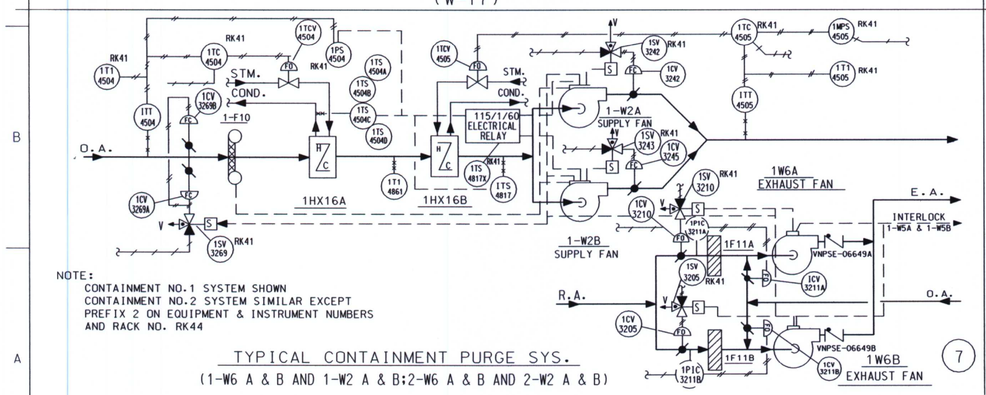

NOTE:
CONTAINMENT NO.1 SYSTEM SHOWN
CONTAINMENT NO.2 SYSTEM SIMILAR EXCEPT
PREFIX 2 ON EQUIPMENT & INSTRUMENT NUMBERS
AND RACK NO. RK44

TYPICAL CONTAINMENT PURGE SYS.
(1-W6 A & B AND 1-W2 A & B;2-W6 A & B AND 2-W2 A & B)

7

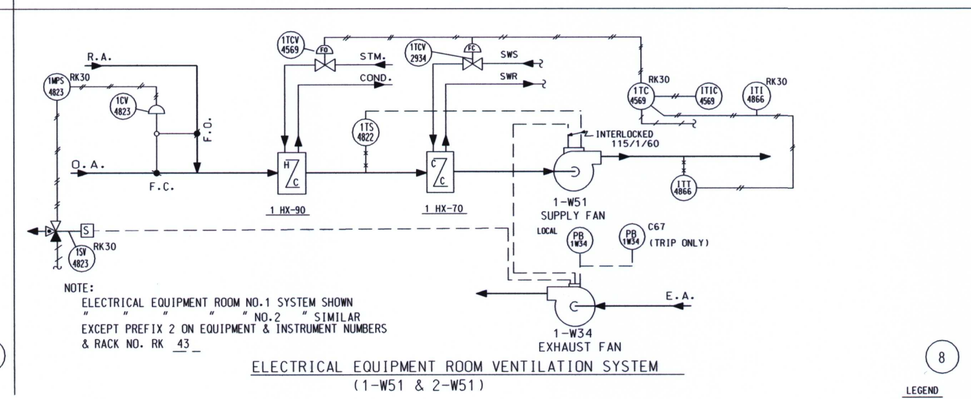

NOTE:
ELECTRICAL EQUIPMENT ROOM NO.1 SYSTEM SHOWN
" " " " " " NO.2 " SIMILAR
EXCEPT PREFIX 2 ON EQUIPMENT & INSTRUMENT NUMBERS
& RACK NO. RK 43

ELECTRICAL EQUIPMENT ROOM VENTILATION SYSTEM
(1-W51 & 2-W51)

8

LEGEND

SEE DWG.SK-M-320 SHEET 1 OF 8

17 PSI CONTROL AIR
M.P.S. MANUAL POSITION SWITCH
LOCALLY MOUNTED INSTRUMENT
C58 INSTRUMENT MOUNTED ON PANEL C58

TMR-TIME SWITCH
O.A-OUTSIDE AIR
S.A.-SUPPLY AIR
R.A.-RETURN AIR
E.A.-EXAUST AIR
N.O.-NORMALLY OPEN DURING PLANT OPERATIONS
N.C.- NORMALLY CLOSED " " "
F.O.-FAIL OPEN ON LOSS OF CONTROL AIR OR ELECT. POWER
F.C.-FAIL CLOSED " " " " " " " "
V. - VENT
S.R.-SELECTOR RELAY

HWS HEATING HOT WATER SUPPLY
HWR " " " RETURN
CWS CHILLED WATER SUPPLY
CWR " " RETURN

D079

LEGEND
MAGENTA - IN SCOPE LR
BLACK - NOT IN SCOPE LR

LR-M-143
UNIT 1 & 2
HEATING & VENTILATION TEMPERATURE CONTROLS
REV. 1 DATE:10-17-03