LEGEND

⚡	KEY SWITCH	(A)	AMBER INDICATING LIGHT
△	360 NOZZLE	(R)	RED INDICATING LIGHT
△X	180 NOZZLE	(G)	GREEN INDICATING LIGHT
ASC	1301 HALON AGENT STORAGE CONTAINER		

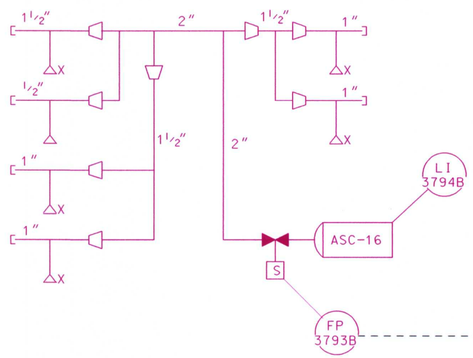

INSTRUMENT RACK ROOM

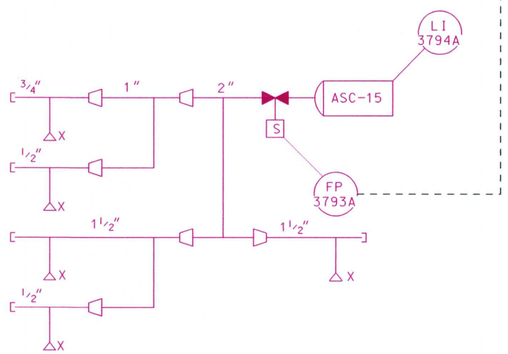

COMPUTER ROOM

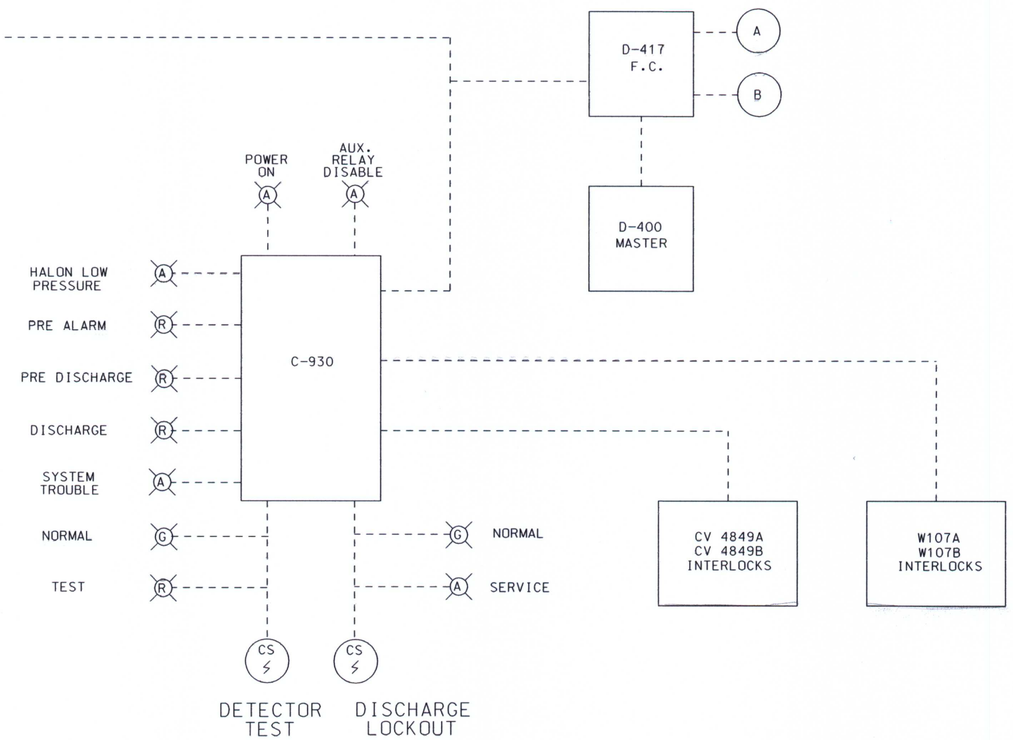

D047

LEGEND

MAGENTA - IN SCOPE LR

BLACK - NOT IN SCOPE LR

LR-M-208 SH-7

UNIT 1 & 2

FIRE PROTECTION HALON SYSTEM

REV. 1 DATE:10-17-03