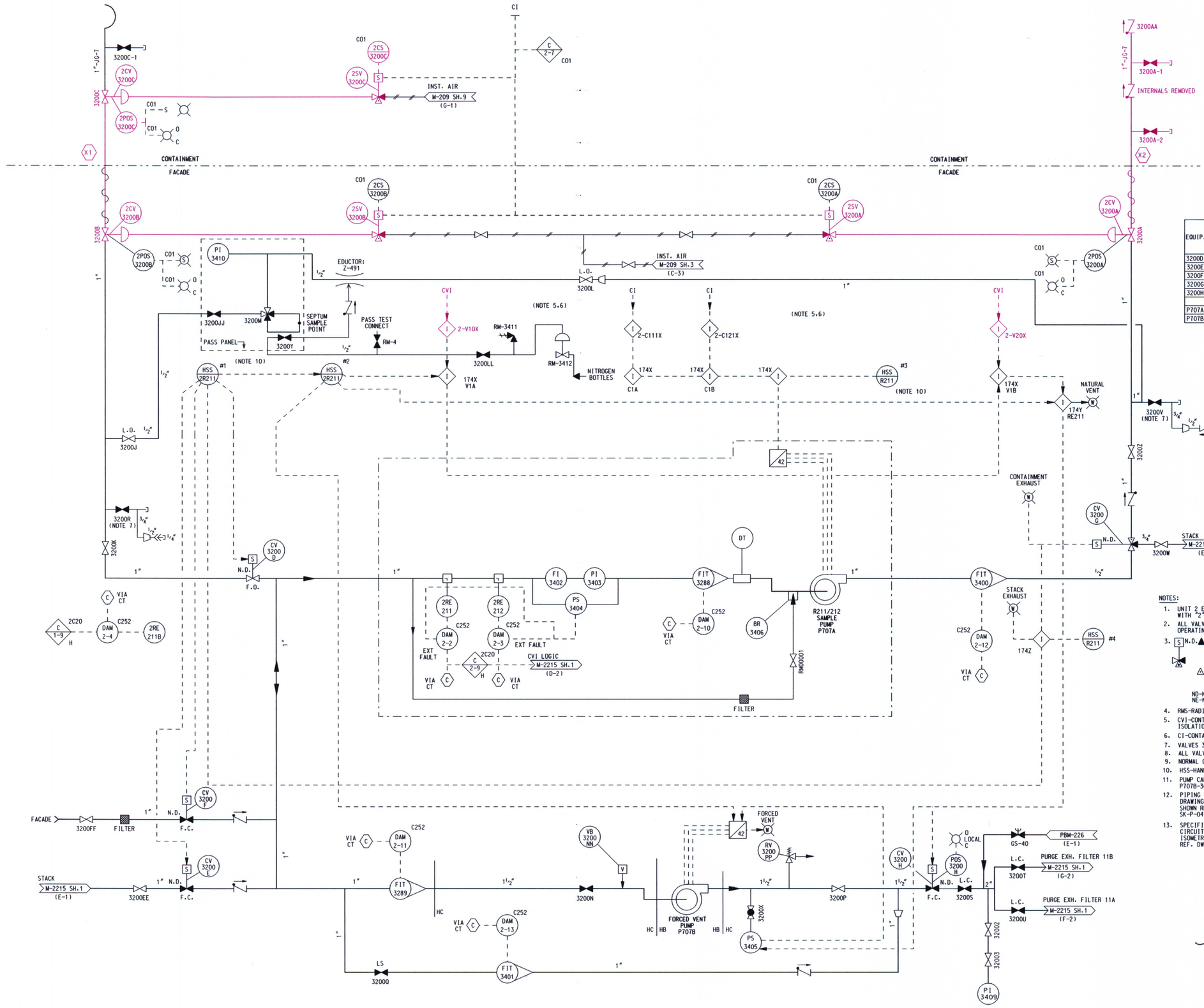

(NOTE 10)

EQUIP.	SAMPLE MODE (SW.1)					
				CONTAINMENT (SW.2)		
	SEPTUM	PURGE	STACK	VENT OFF	NAT. VENT	FORCED VENT
3200D	CL	CL	CL	O	O	O
3200E	CL	CL	O	CL	CL	CL
3200F	CL	O	CL	CL	CL	CL
3200G	PURGE	PURGE	PURGE	CONT.	CONT.	CONT.
3200H	CL	CL	CL	CL	O	O
P707A	OFF	ON	ON	ON	ON	ON
P707B	OFF	OFF	OFF	OFF	OFF	ON

NOTES:

1. UNIT 2 EQUIPMENT NUMBERS PREFIXED WITH "2".
2. ALL VALVES SHOWN IN NORMAL PLANT OPERATING POSITION.
3. S N.D. ▲ -INDICATES PORT THAT IS CLOSED WHEN SOLENOID IS DE-ENERGIZED.

   △ - INDICATES PORT THAT IS TO CLOSE WHEN SOLENOID IS ENERGIZED.

   ND-NORMALLY DE-ENERGIZED.
   NE-NORMALLY ENERGIZED.
4. RMS-RADIATION MONITORING SYSTEM.
5. CVI-CONTAINMENT VENTILATION ISOLATION SIGNAL.
6. CI-CONTAINMENT ISOLATION SIGNAL.
7. VALVES 3200R & V ARE D.R.T. #3 CONNS.
8. ALL VALVE NUMBERS PRECEDED BY "RM".
9. NORMAL OPERATION EQUIP. ALIGNMENT.
10. HSS-HAND SELECTOR SWITCH. (SEE TABLE)
11. PUMP CAPACITIES: P707A-60 LPM. P707B-30 CFM.
12. PIPING CLASSIFICATIONS ARE SHOWN ON DRAWING. IF PIPING CLASSIFICATION IS NOT SHOWN REFER TO S & W DWG. 1375401-SK-P-047.
13. SPECIFIC LOCATIONS OF FREEZE PROTECTION CIRCUITS ARE SHOWN ON SYSTEM FF ISOMETRIC DRAWING. REF. DWG. SERIES FF-M-600

D017

LEGEND

MAGENTA - IN SCOPE LR

BLACK - NOT IN SCOPE LR

LR-M-2215 SH-2
UNIT 2
R211-213 FLOW DIAGRAM

REV. 1 DATE:10-17-03