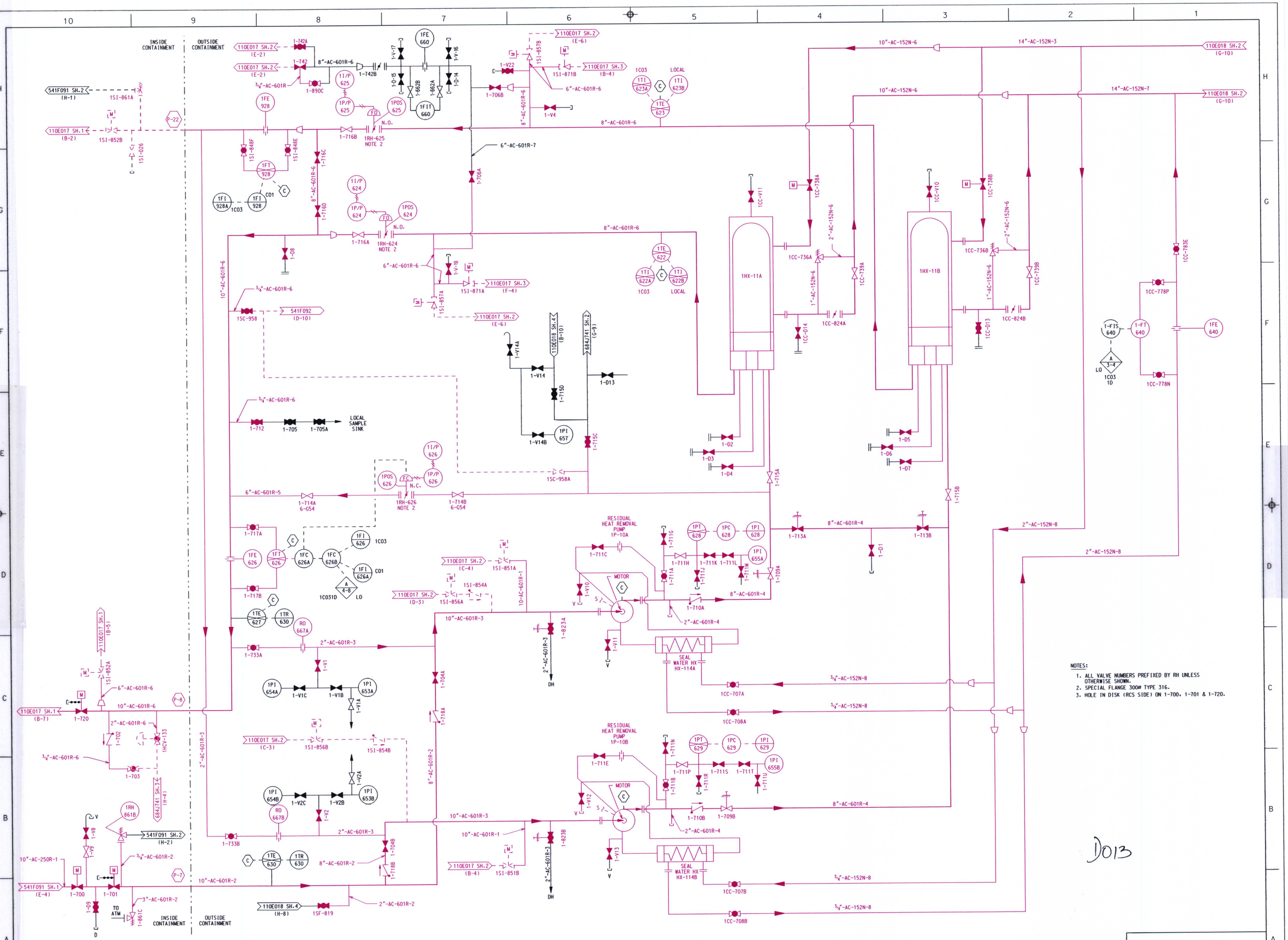
INSIDE CONTAINMENT
OUTSIDE CONTAINMENT
1HX-11A
1HX-11B
RESIDUAL HEAT REMOVAL PUMP 1P-10A
RESIDUAL HEAT REMOVAL PUMP 1P-10B
SEAL WATER HX HX-114A
SEAL WATER HX HX-114B
LOCAL SAMPLE SINK
TO ATM
NOTES:
1. ALL VALVE NUMBERS PREFIXED BY RH UNLESS OTHERWISE SHOWN.
2. SPECIAL FLANGE 300# TYPE 316.
3. HOLE IN DISK (RCS SIDE) ON 1-700, 1-701 & 1-720.
LEGEND
MAGENTA - IN SCOPE LR
BLACK - NOT IN SCOPE LR
LR-110E018 SH-1
UNIT 1
AUXILIARY COOLANT SYSTEM
REV. 1
DATE:10-17-03
D013