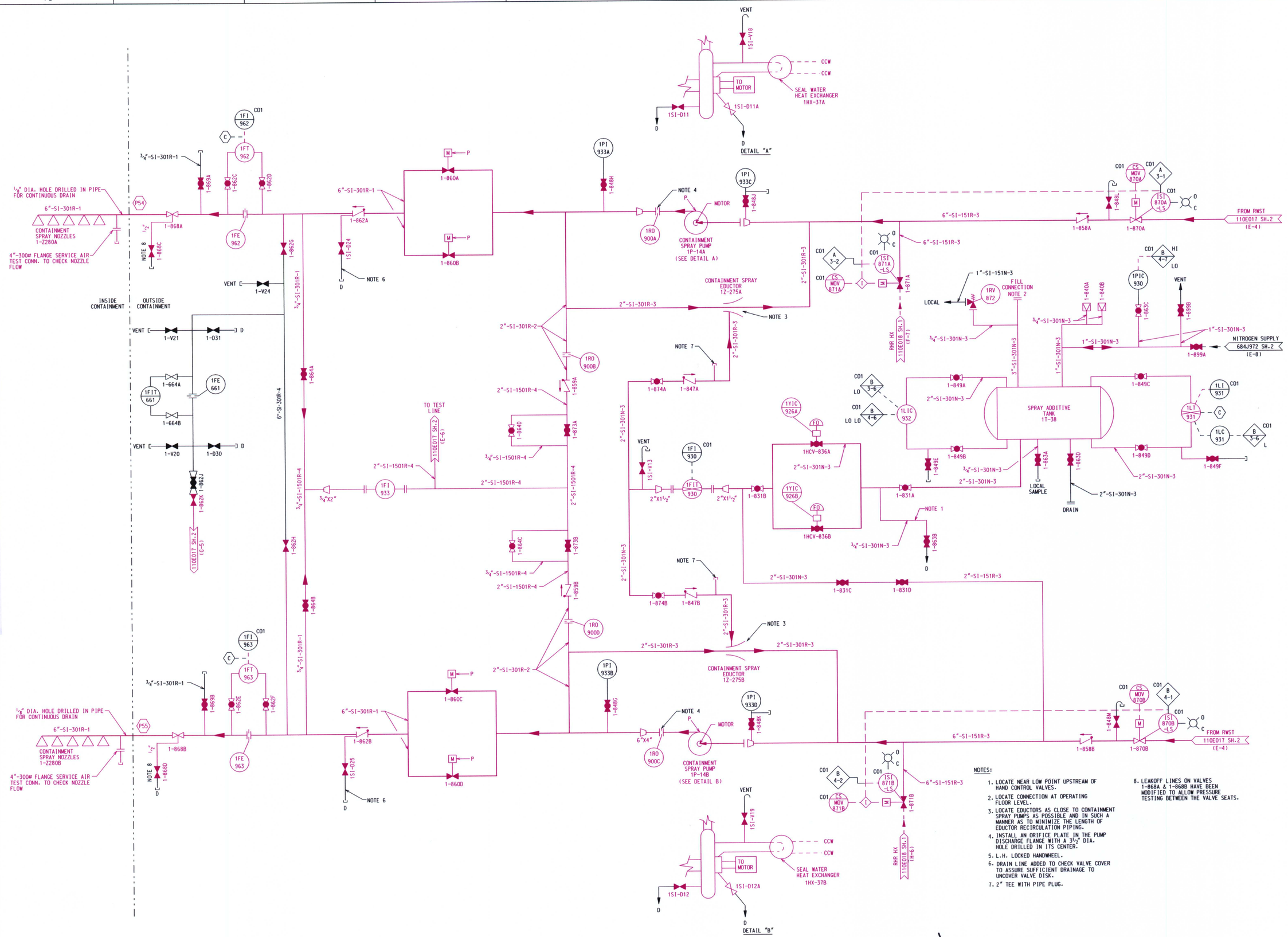

NOTES:

1. LOCATE NEAR LOW POINT UPSTREAM OF HAND CONTROL VALVES.
2. LOCATE CONNECTION AT OPERATING FLOOR LEVEL.
3. LOCATE EDUCTORS AS CLOSE TO CONTAINMENT SPRAY PUMPS AS POSSIBLE AND IN SUCH A MANNER AS TO MINIMIZE THE LENGTH OF EDUCTOR RECIRCULATION PIPING.
4. INSTALL AN ORIFICE PLATE IN THE PUMP DISCHARGE FLANGE WITH A 3 1/2" DIA. HOLE DRILLED IN ITS CENTER.
5. L.H. LOCKED HANDWHEEL.
6. DRAIN LINE ADDED TO CHECK VALVE COVER TO ASSURE SUFFICIENT DRAINAGE TO UNCOVER VALVE DISK.
7. 2" TEE WITH PIPE PLUG.
8. LEAKOFF LINES ON VALVES 1-868A & 1-868B HAVE BEEN MODIFIED TO ALLOW PRESSURE TESTING BETWEEN THE VALVE SEATS.

D011

LEGEND

MAGENTA - IN SCOPE LR

BLACK - NOT IN SCOPE LR

LR-110E017 SH-3
UNIT 1
SAFETY INJECTION SYSTEM
REV. 1 DATE:10-17-03