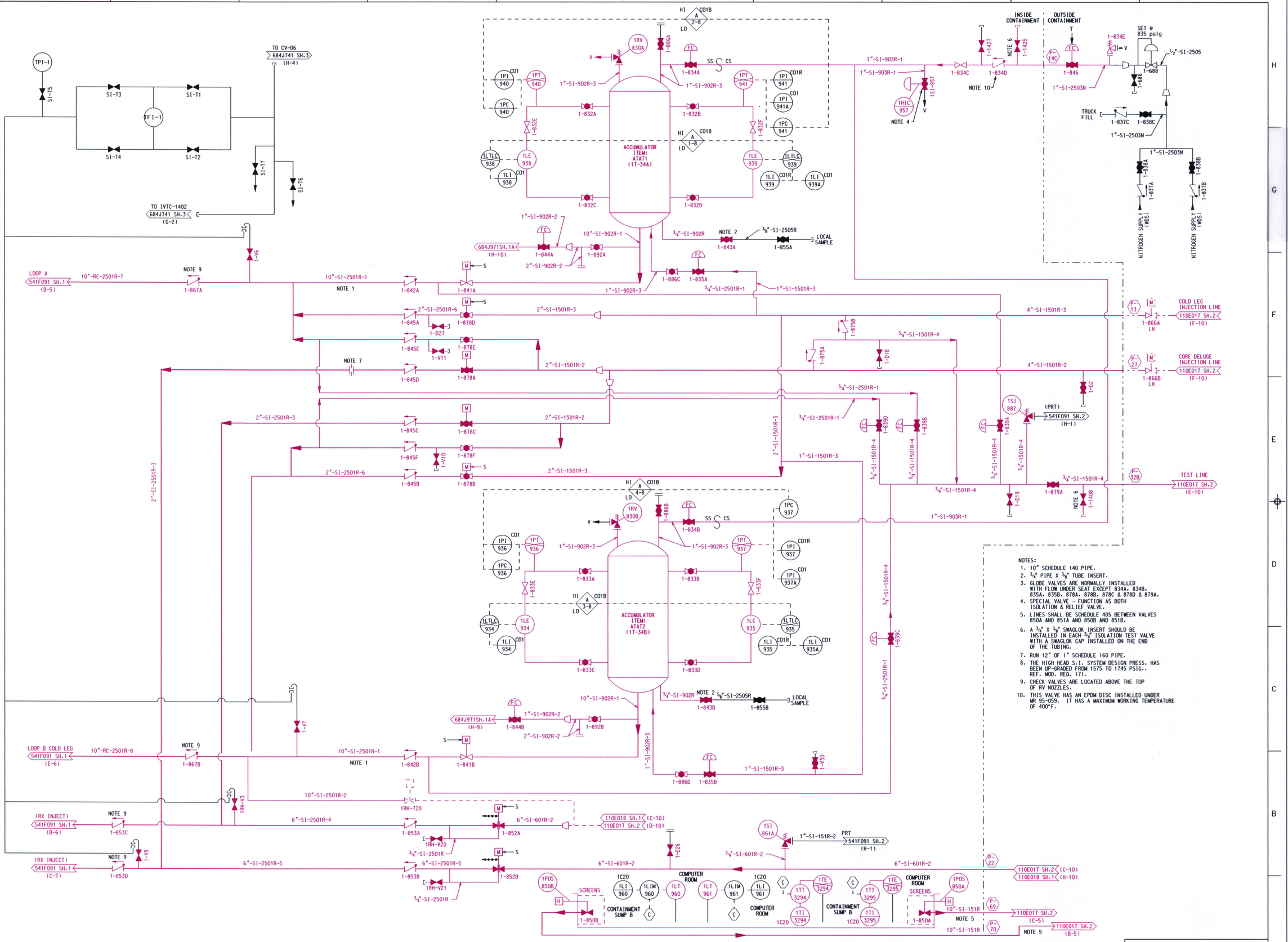

NOTES:

1. 10" SCHEDULE 140 PIPE.
2. ¾" PIPE X ⅜" TUBE INSERT.
3. GLOBE VALVES ARE NORMALLY INSTALLED WITH FLOW UNDER SEAT EXCEPT 834A, 834B, 835A, 835B, 878A, 878B, 878C & 878D & 879A.
4. SPECIAL VALVE – FUNCTION AS BOTH ISOLATION & RELIEF VALVE.
5. LINES SHALL BE SCHEDULE 40S BETWEEN VALVES 850A AND 851A AND 850B AND 851B.
6. A ¾" X ⅜" SWAGLOK INSERT SHOULD BE INSTALLED IN EACH ¾" ISOLATION TEST VALVE WITH A SWAGLOK CAP INSTALLED ON THE END OF THE TUBING.
7. RUN 12" OF 1" SCHEDULE 160 PIPE.
8. THE HIGH HEAD S.I. SYSTEM DESIGN PRESS. HAS BEEN UP-GRADED FROM 1575 TO 1745 PSIG.. REF. MOD. REQ. 171.
9. CHECK VALVES ARE LOCATED ABOVE THE TOP OF RV NOZZLES.
10. THIS VALVE HAS AN EPDM DISC INSTALLED UNDER MR 95-059. IT HAS A MAXIMUM WORKING TEMPERATURE OF 400°F.

LEGEND

MAGENTA – IN SCOPE LR

BLACK – NOT IN SCOPE LR

D007

LR-110E017 SH-1
UNIT 1
SAFETY INJECTION SYSTEM
REV. 1 DATE:10-17-03