Scenario Description for ACR-700 Inlet Header Critical Break LOCA

Dave Wright
Principal Engineer, Safety Analysis

Presented to US NRC PIRT Panel
Washington DC
February 18, 2004

AECL TECHNOLOGIES INC.

Outline

- Introduction
- CATHENA Model
- Event Sequence
- Scenario Description
- Summary

Introduction

- Describe ACR-700 postulated critical break large LOCA scenario
  - 25% reactor inlet header break with subsequent loss of Class IV power
- Purpose is to identify:
  - Processes and phenomena that occur (WHAT)
  - Underlying physics that result in the identified processes and phenomena (WHY)
- Description is based on a CATHENA calculation
  - Details provided in the report "Scenario Description for ACR-700 Inlet Header Critical Break LOCA", 108US-03532-225-002, sent to USNRC

CATHENA Model

- CATHENA circuit model:
  - one-loop, figure-of-eight RCS
  - secondary side
  - ECC (ECI, LTC, large interconnect)
- End of life conditions
  - 2% quality in outlet headers
- Initial power assumed to be 103 percent of full power

Nodalization of the Reactor Cooling System

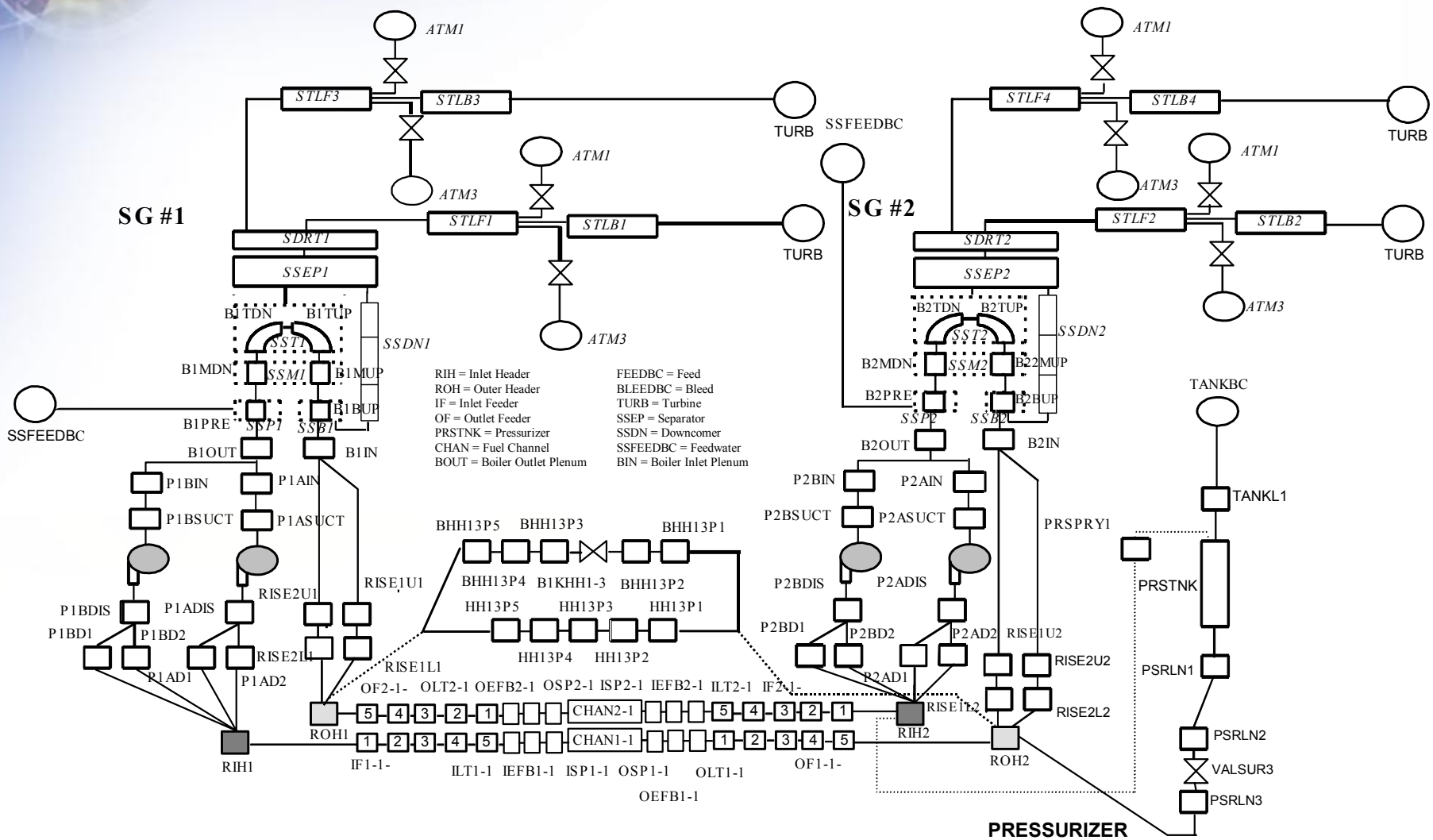

Nodalization of the ECC System

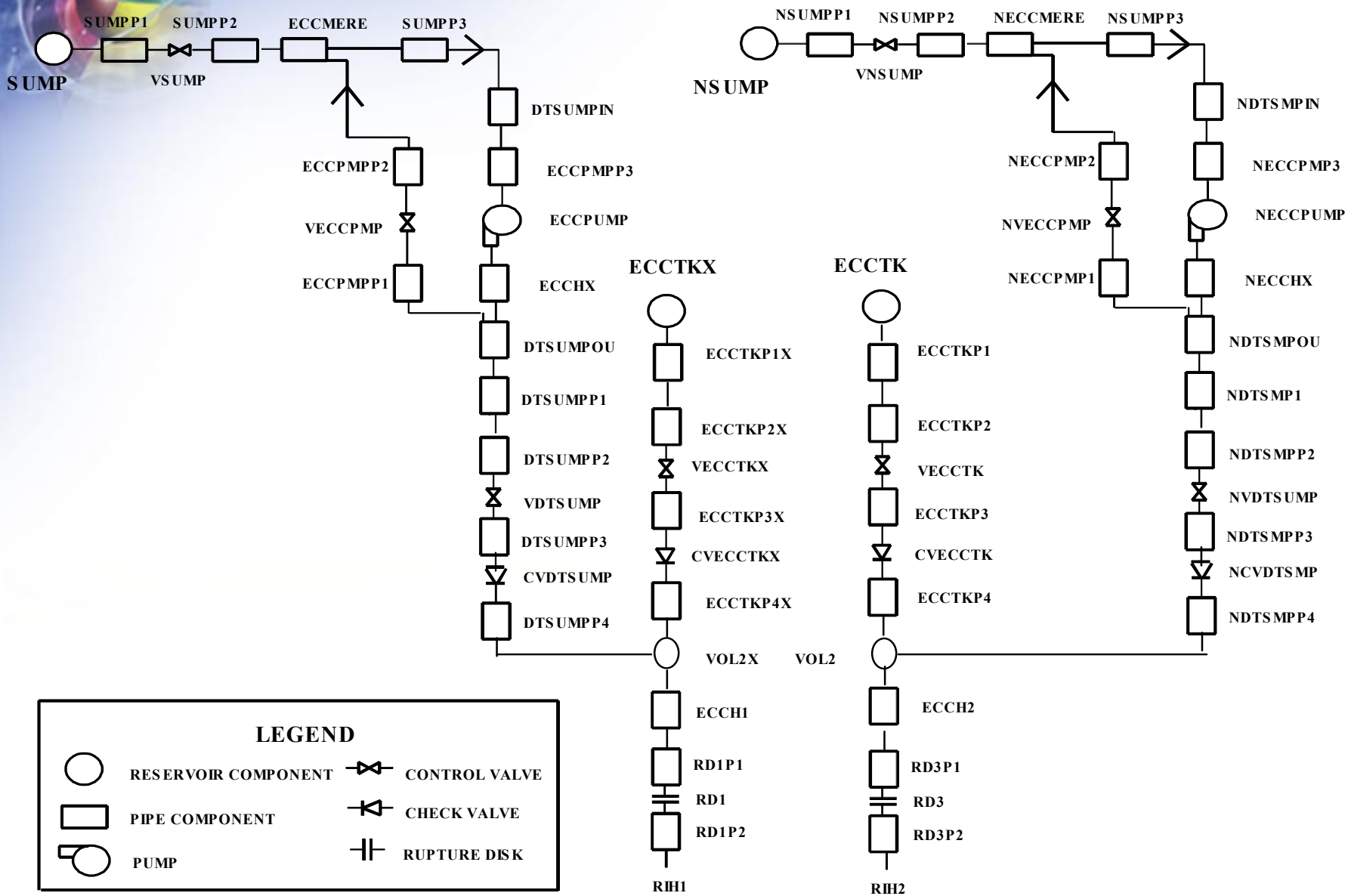

Event Sequence

- Three phases are identified:
- Phase 1: Early Blowdown Cooling (0 – 53 seconds)
  - Period from occurrence of break to initiation of ECI injection
- Phase 2: Late Blowdown Cooling / ECI / Refill (53 – 250 seconds)
  - Continuation of system blowdown, with ECI injection
- Phase 3: Long Term Cooling (250 – 2000 seconds, end of calculation)
  - LTC provides recovery flow to maintain core cooling

Event Sequence

Elapsed Time (s)	Event Description
Early Blowdown (0 – 53 seconds)	
0	• Break occurs • All other systems operating normally
0.4	• Low RCS flow trip signal (1st modelled trip signal)

~0.5	• Containment pressure rises and exceeds containment high pressure trip setpoint of 3.45 kPa(g)
	  o ECI signal conditioned
	  o Reactor trip signal

2.0	• Low RCS pressure trip signal (2nd modelled trip signal). • SDS1/SDS2 shutdown initiated.
3.6	• SDS1 fully inserted (-51 mk) • SDS2 poison spreading in moderator

Event Sequence

Elapsed Time (s)	Event Description
Early Blowdown (0 – 53 seconds)	

7.0	• ECI signal actuated on low RCS pressure
	  o ECI valves start to open
	  o ECI large header interconnect valves start to open
	  o signal to initiate SG crash cooldown (with delay)
	  o signal to start Class III diesels (180 s until available).
	  o Reserve Water System (RWS) dump valves start to open
	  o LTC pumps start (2 x 330 L/s)

9.1	• Loss of Class IV power (associated with load switching failures during turbine unloading) • RCS pumps trip and begin to rundown • main feed water pumps stop
27	• RWS dump valves fully open; LTC sump starts to fill with water (1000 m^3); sump level exceeds LTC pump head requirement before LTC injection valves open • Large header interconnect valves fully open
37	• MSSVs open for crash cooldown

Event Sequence

Elapsed Time (s)	Event Description
Late Blowdown / ECI / Refill (53 – 250 seconds)	
53	• ECI rupture disc on RIH2 opens (RIH2 pressure = 4.4 MPa)
55	• ECI rupture disc on RIH1 opens (RIH1 pressure = 4.4 MPa)
187	• All Class III powered loads have been sequenced • LTC pumps running on Class III power in recirculation mode • Auxiliary feed water pumps start
Long-Term Cooling (250 – 2000 seconds; end of calculated accident)	
222	• ECI flow to RIH2 starts to terminate; ECI injection valves start to close • LTC isolation valves to RIH2 start to open (on high sump level)
236	• ECI flow to RIH1 starts to terminate; ECI injection valves start to close • LTC isolation valves to RIH1 start to open (on high sump level)
250	• LTC flow to RIH2 begins

Scenario Description

- Focus on the cladding temperature behavior and the phenomena and processes that cause the predicted behavior
- Discuss system and component interactions leading to cladding temperature response
- Focus on processes and phenomena in components which have the greatest impact on the cladding temperature response

Phase 1: Maximum Cladding Temperature

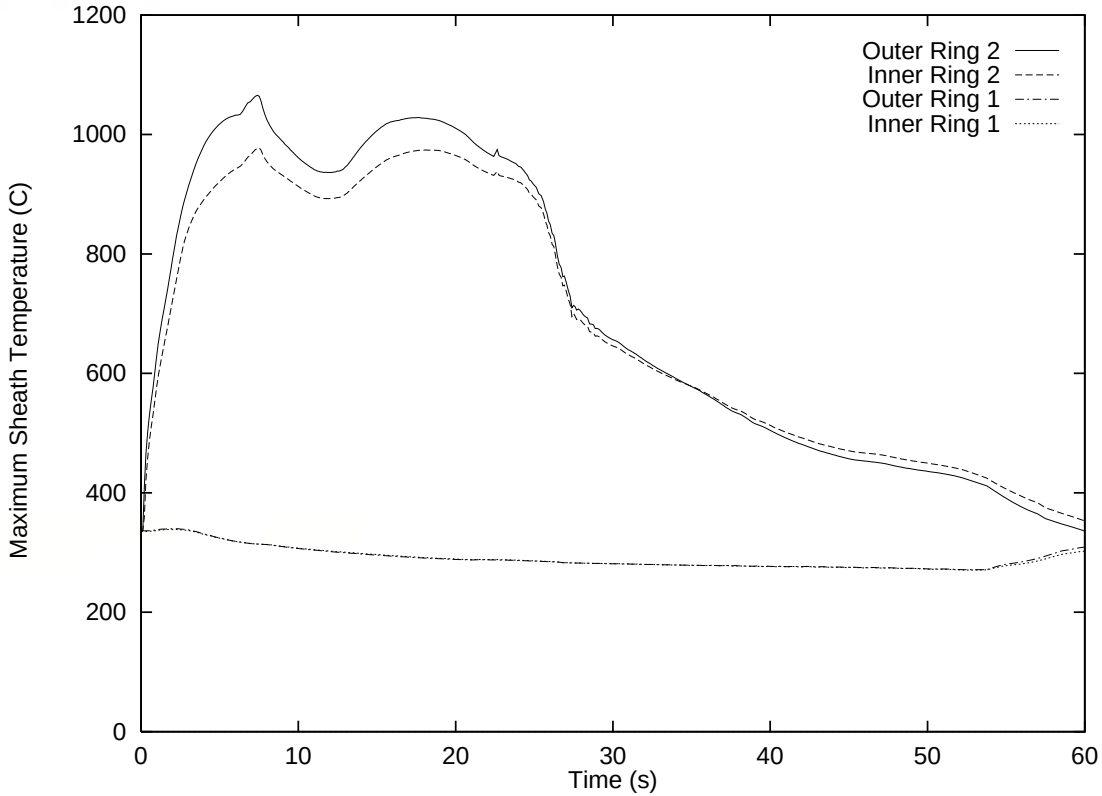

Reactor Coolant System Conditions T = 0 s

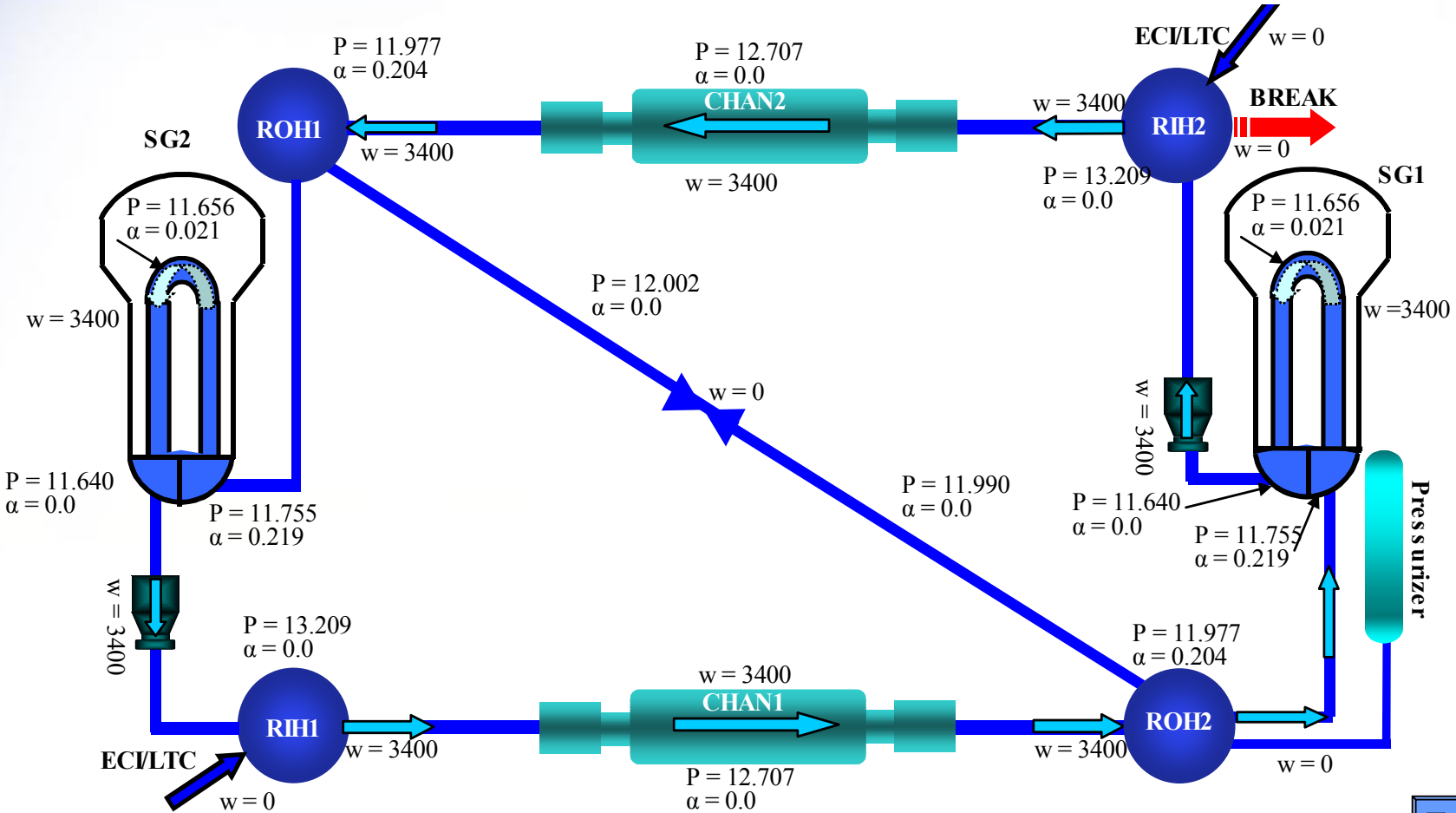

Reactor Coolant System Conditions T = 2 s

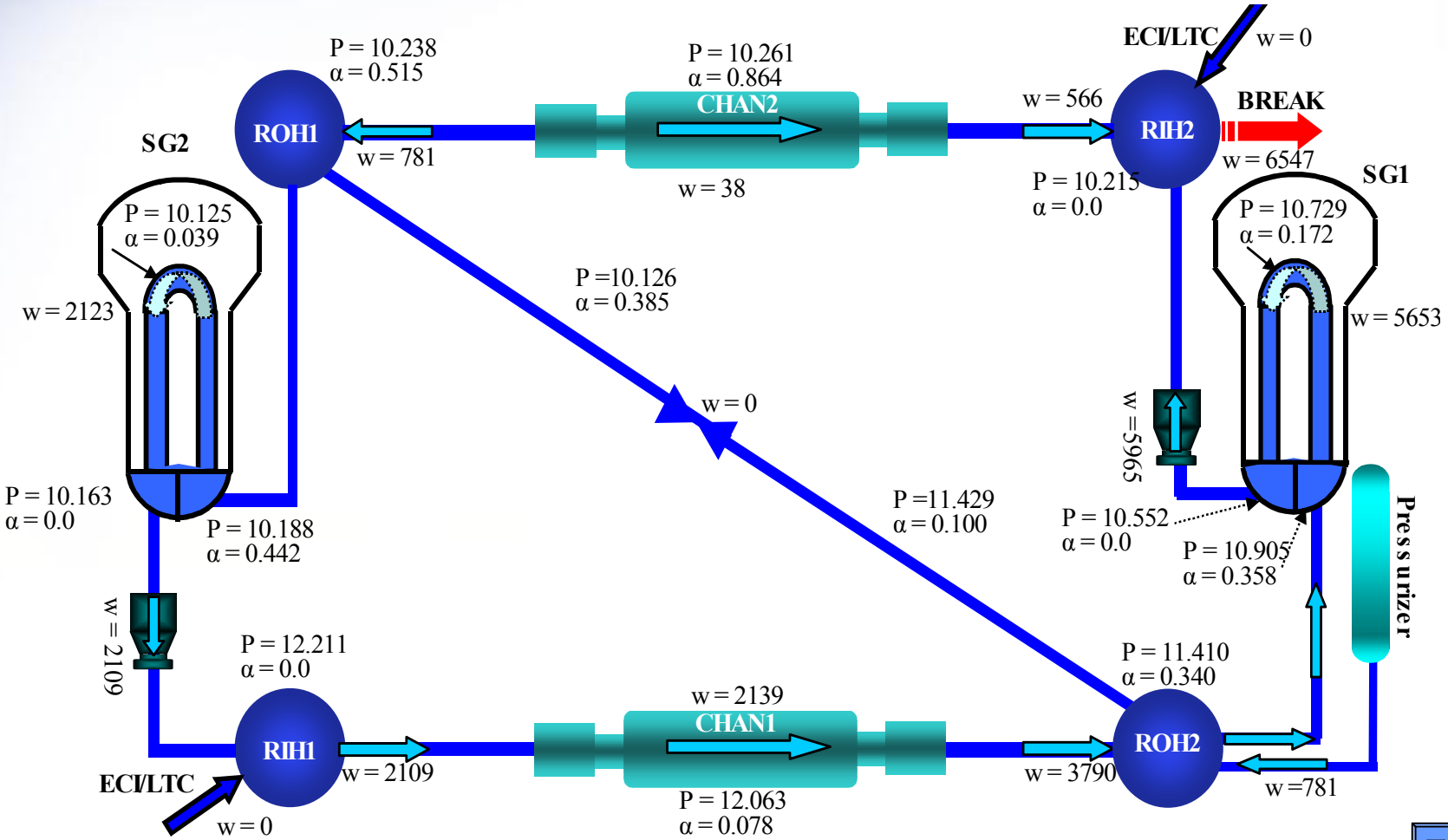

Reactor Coolant System Conditions T = 5 s

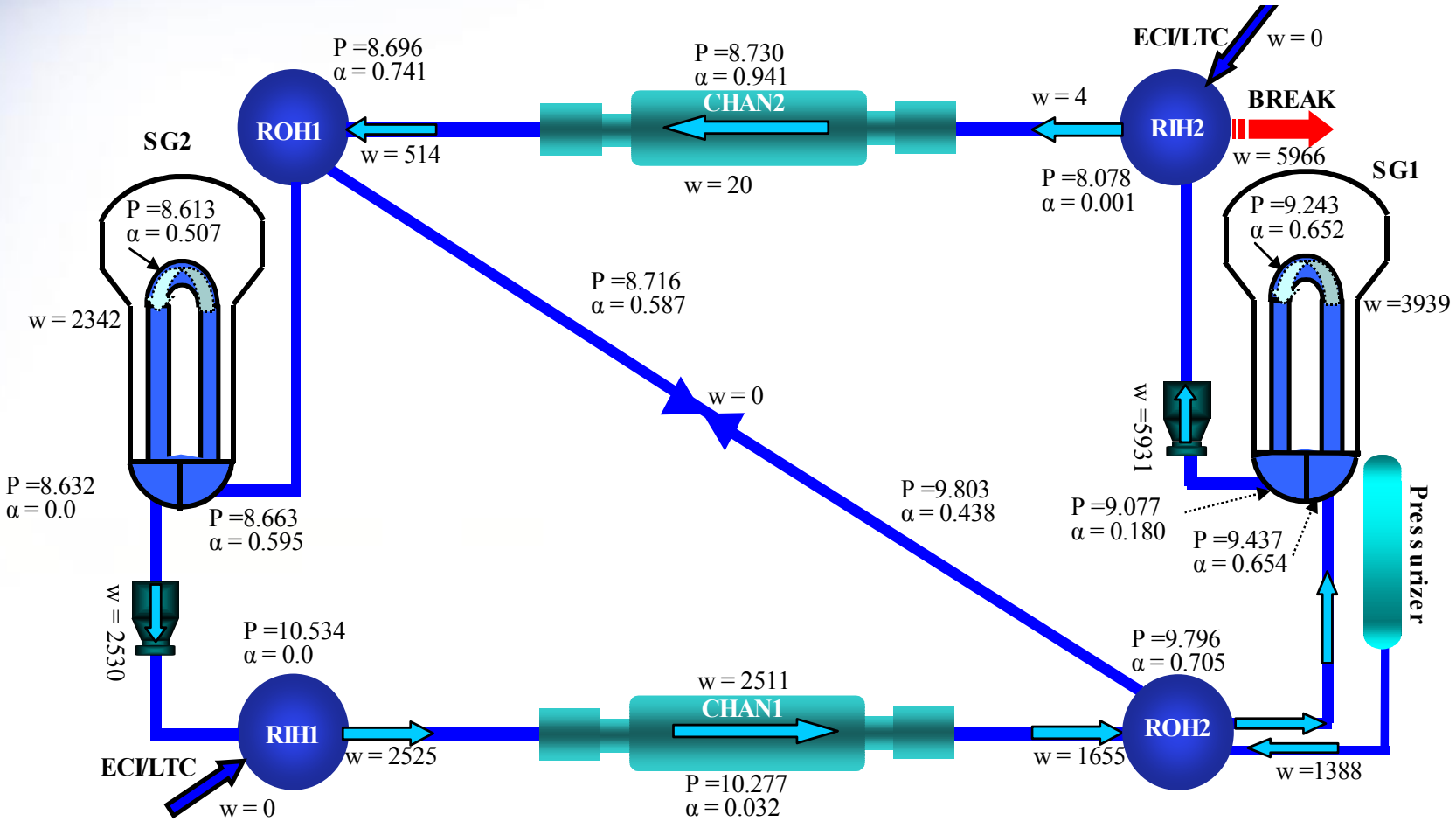

Reactor Coolant System Conditions T = 8.5 s

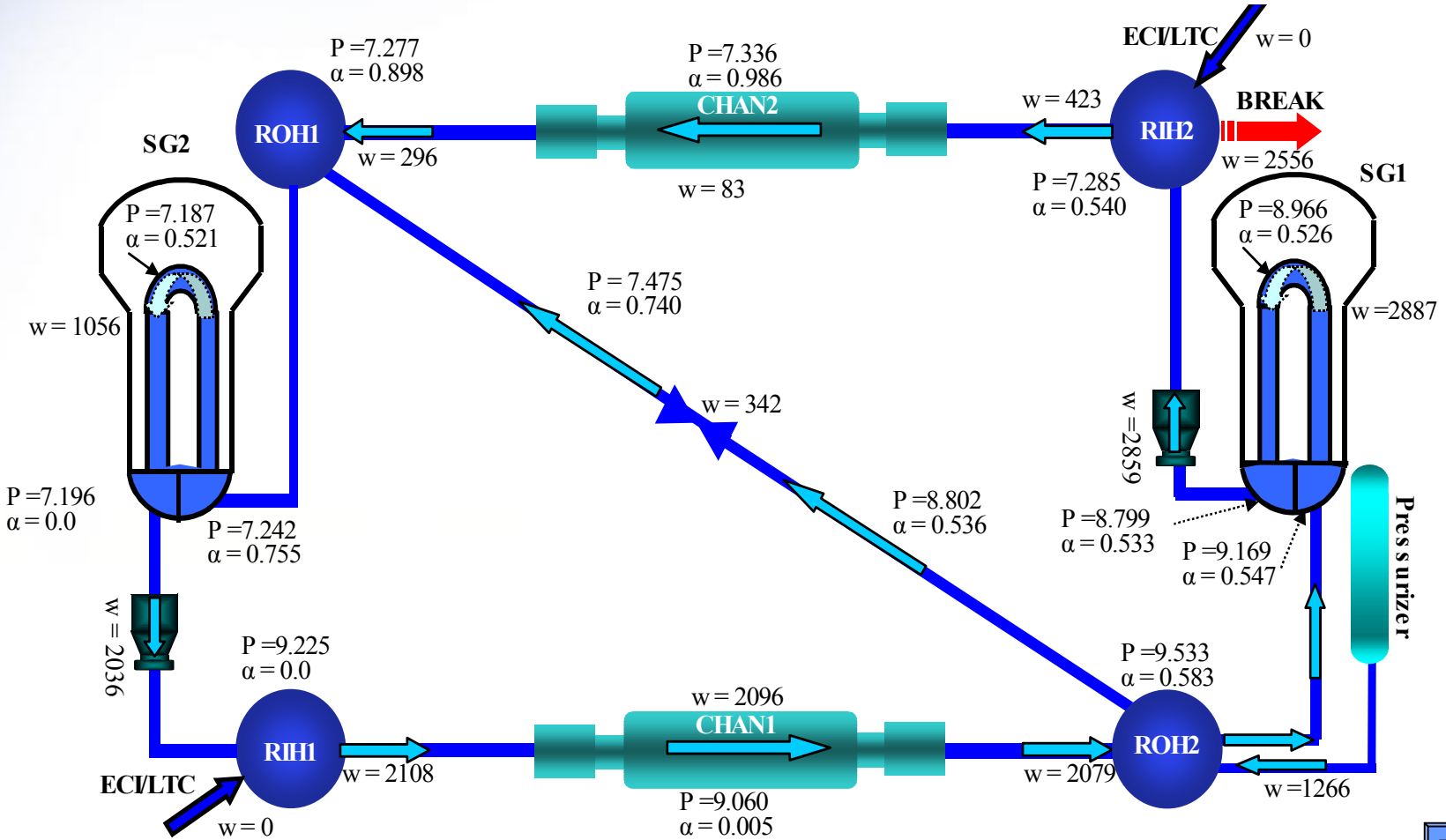

Reactor Coolant System Conditions T = 15 s

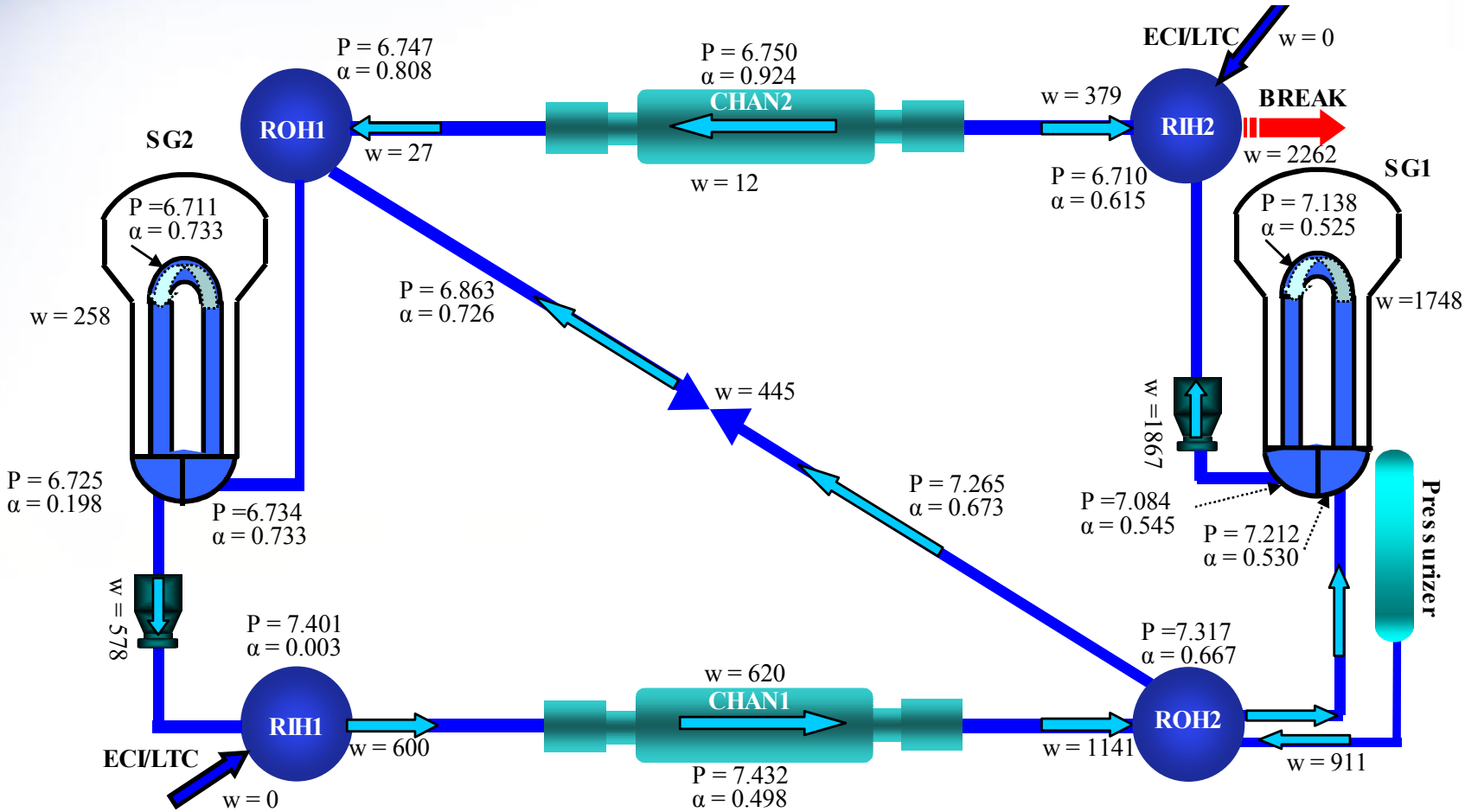

Reactor Coolant System Conditions T = 25 s

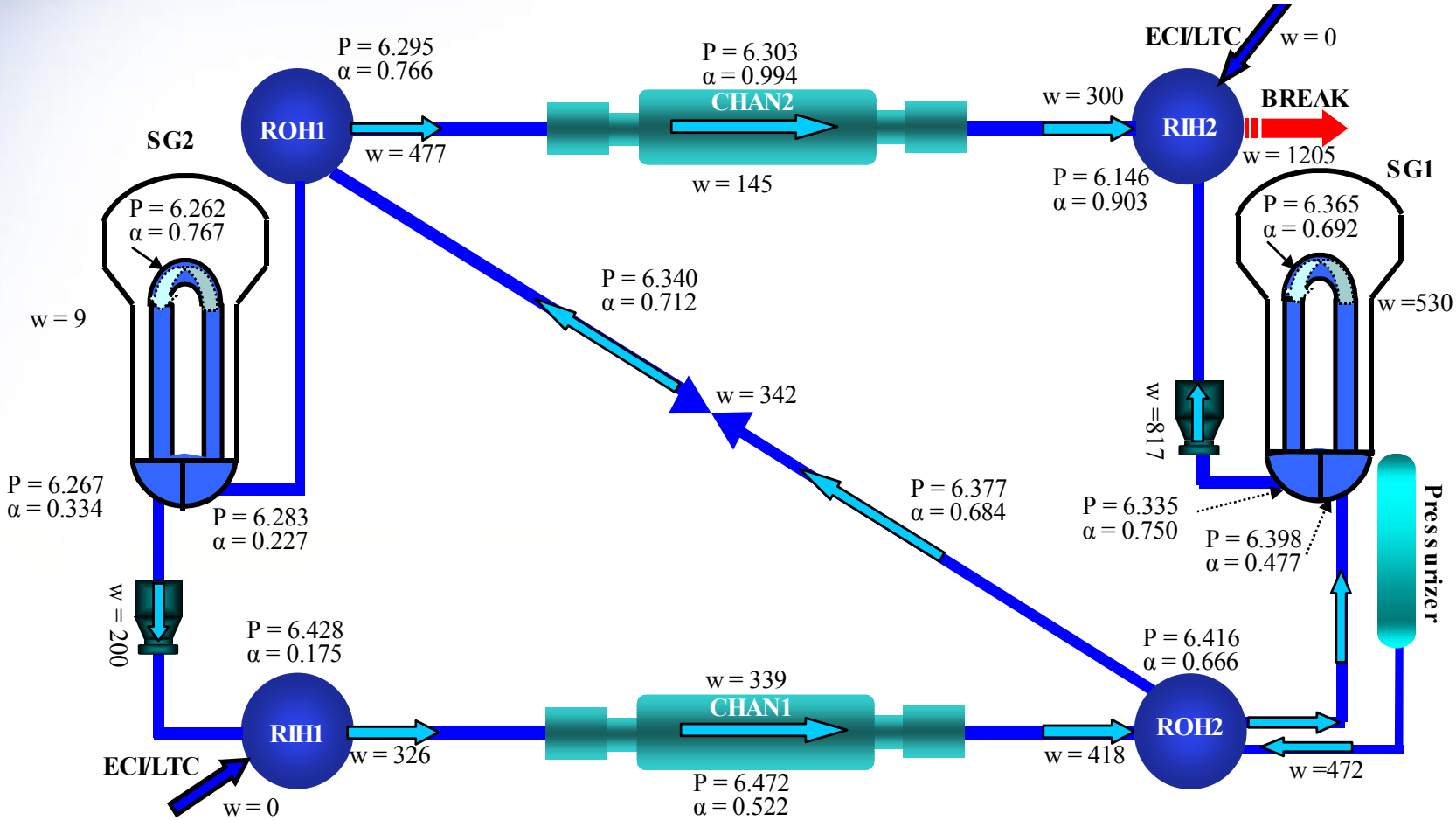

Reactor Coolant System Conditions T = 53 s

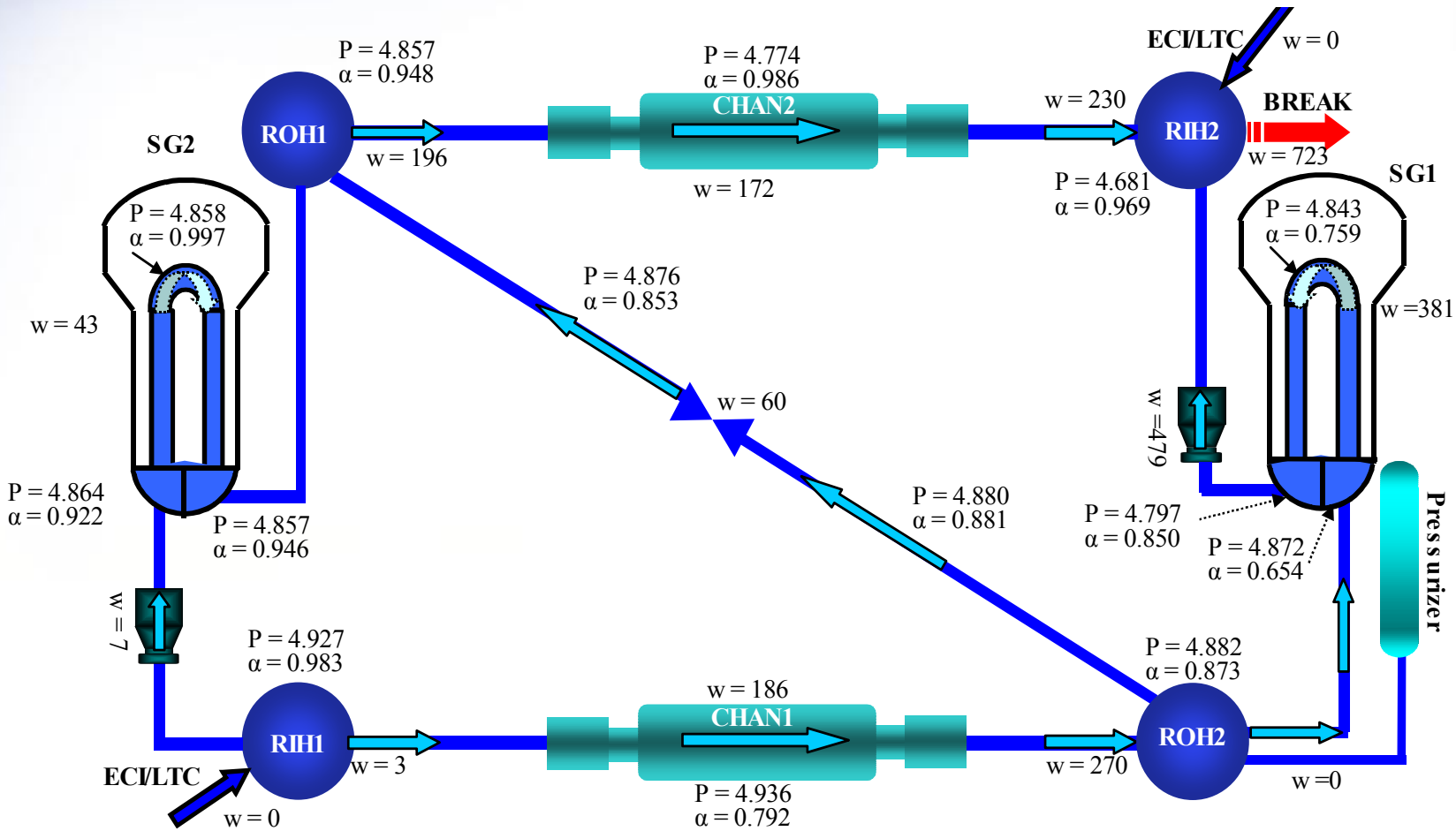

Phase 2: Maximum Cladding Temperature

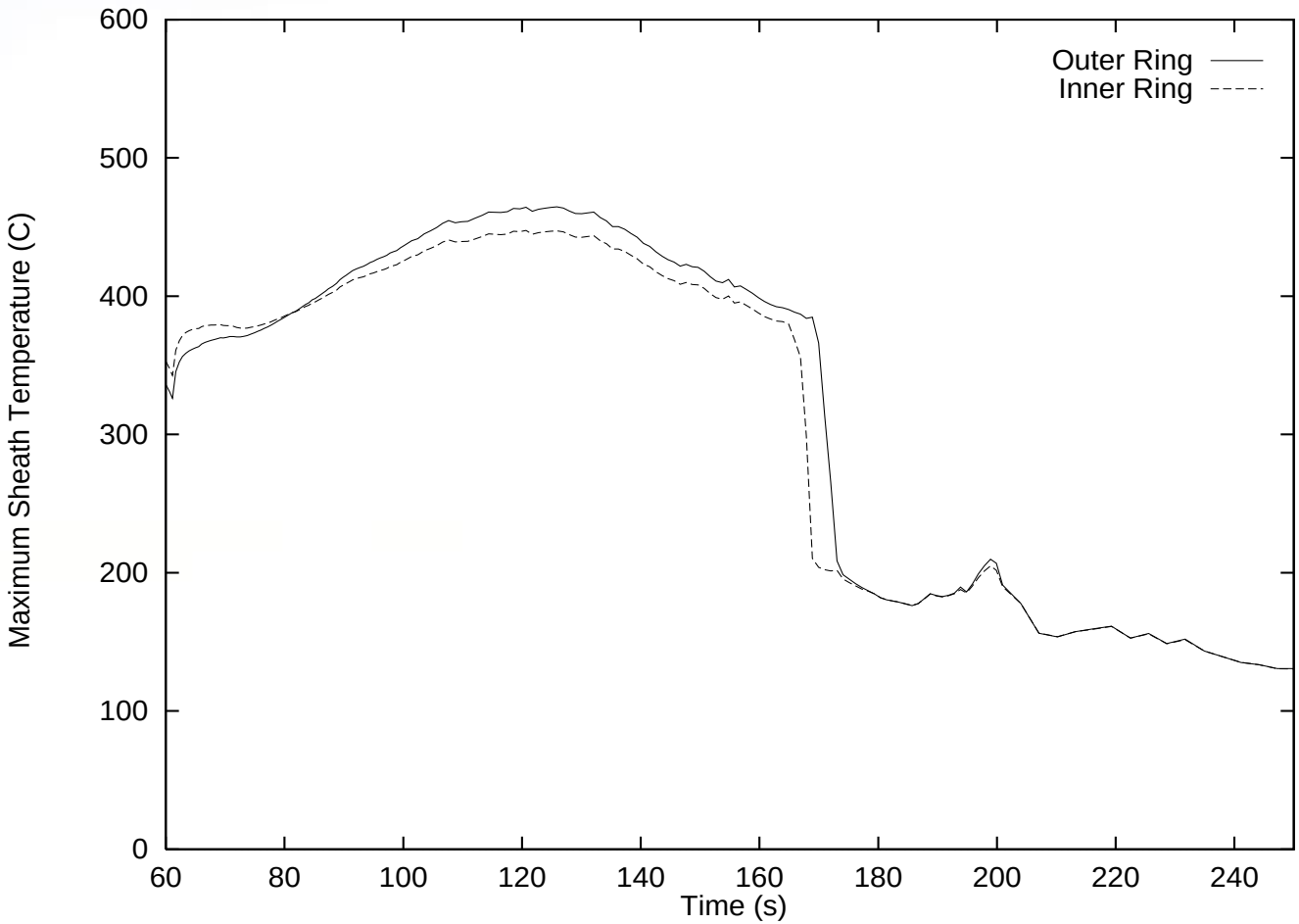

Reactor Coolant System Conditions T = 100 s

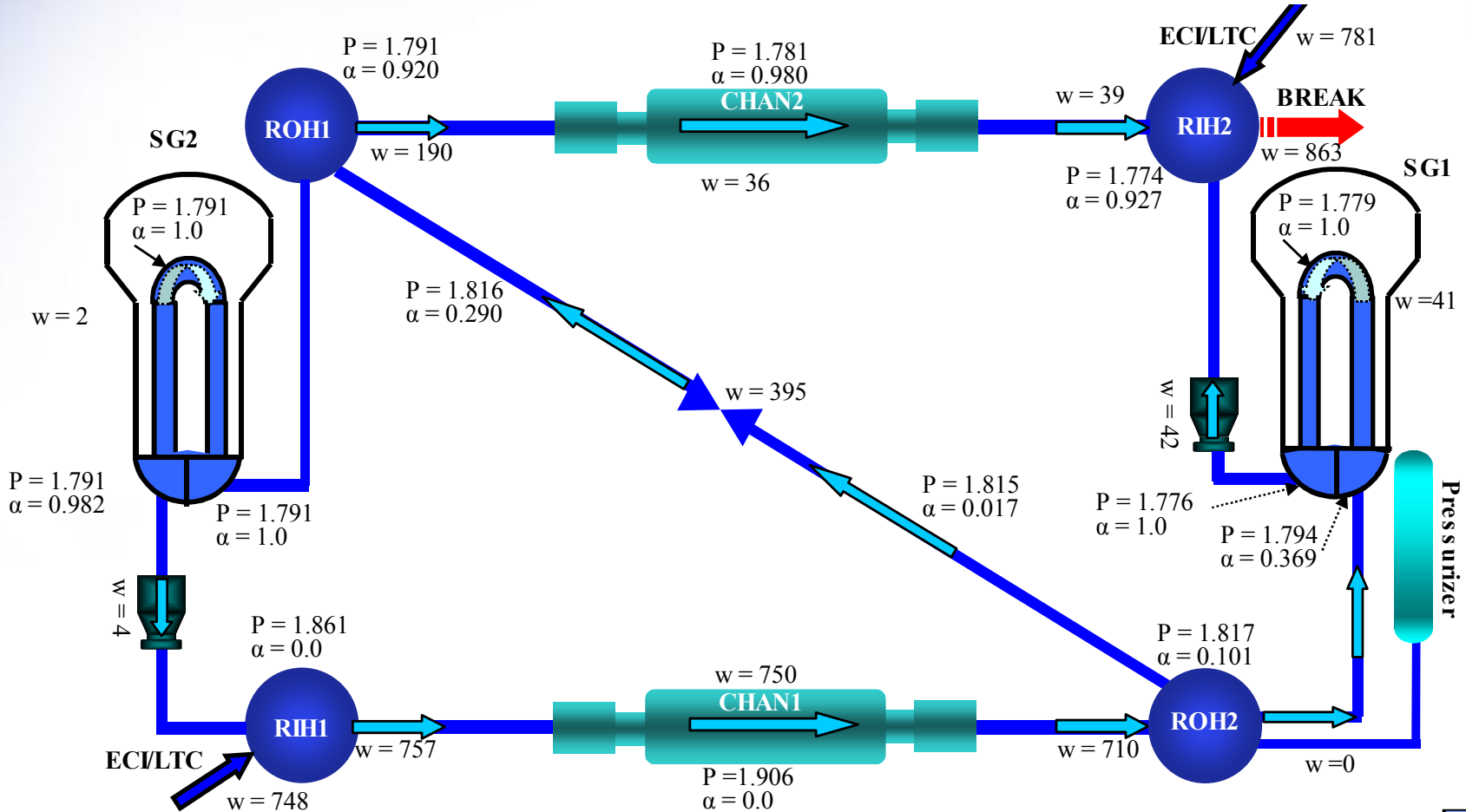

Reactor Coolant System Conditions T = 250 s

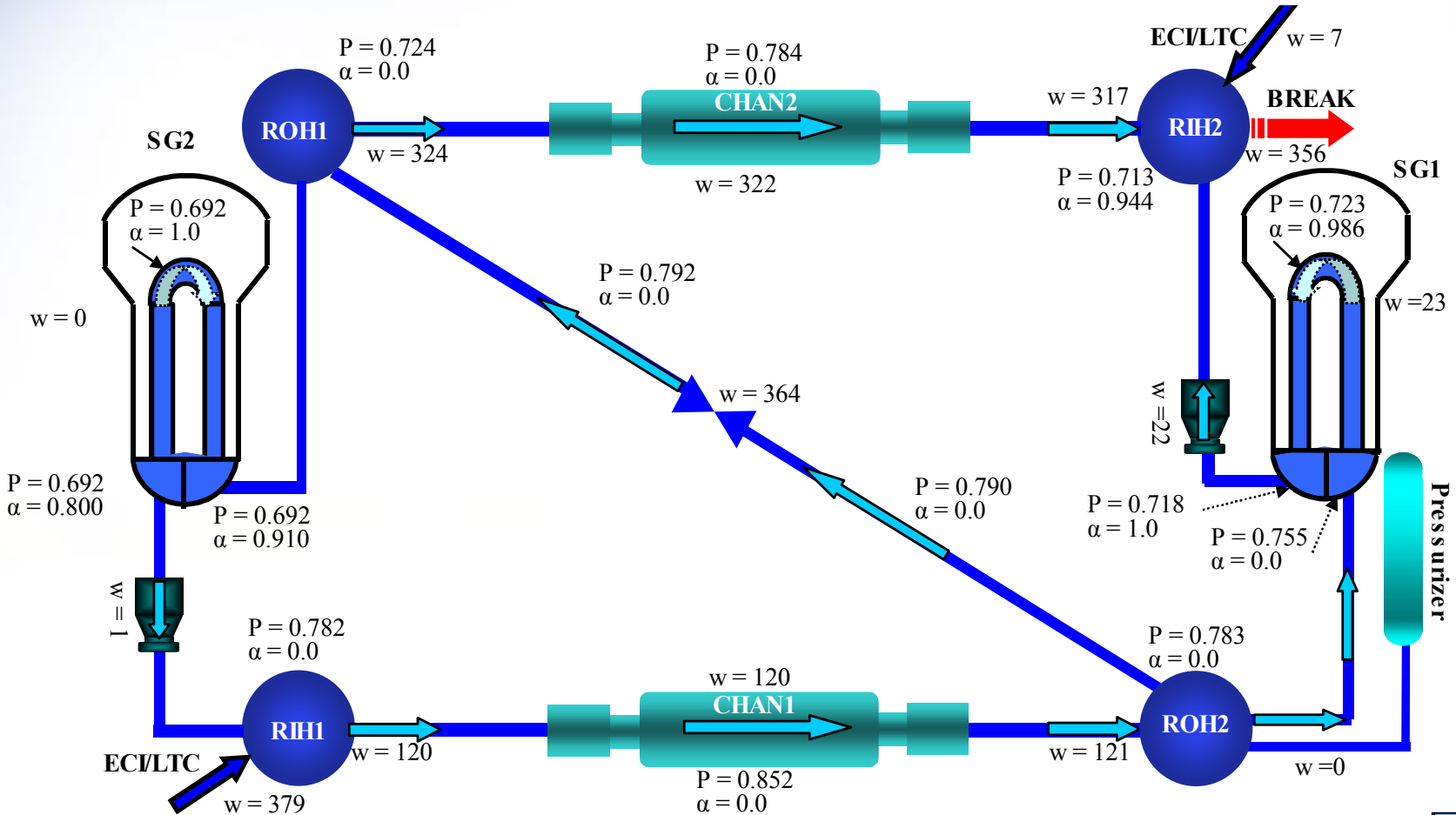

Phase 3: Maximum Cladding Temperature

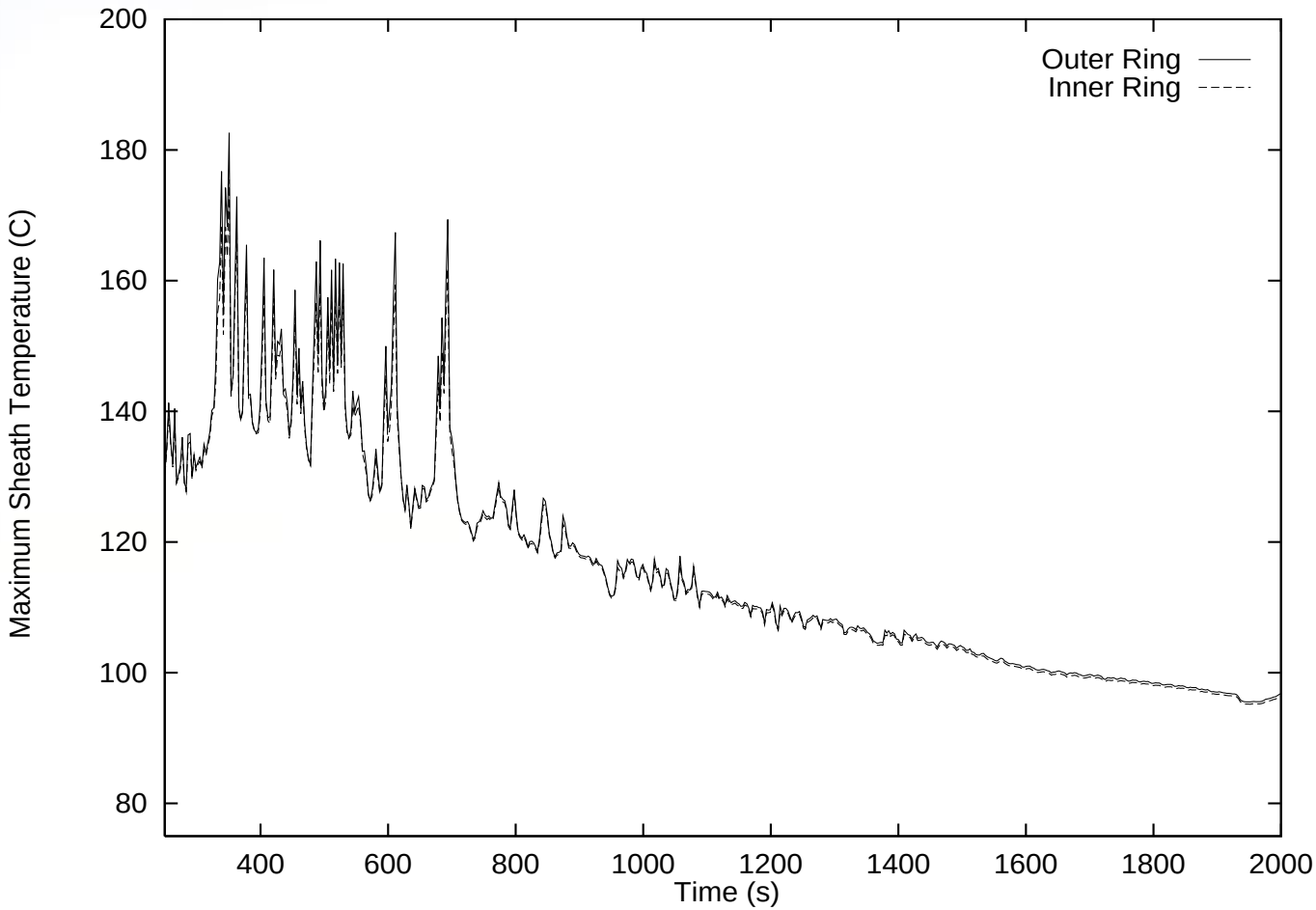

Reactor Coolant System Conditions T = 299 s

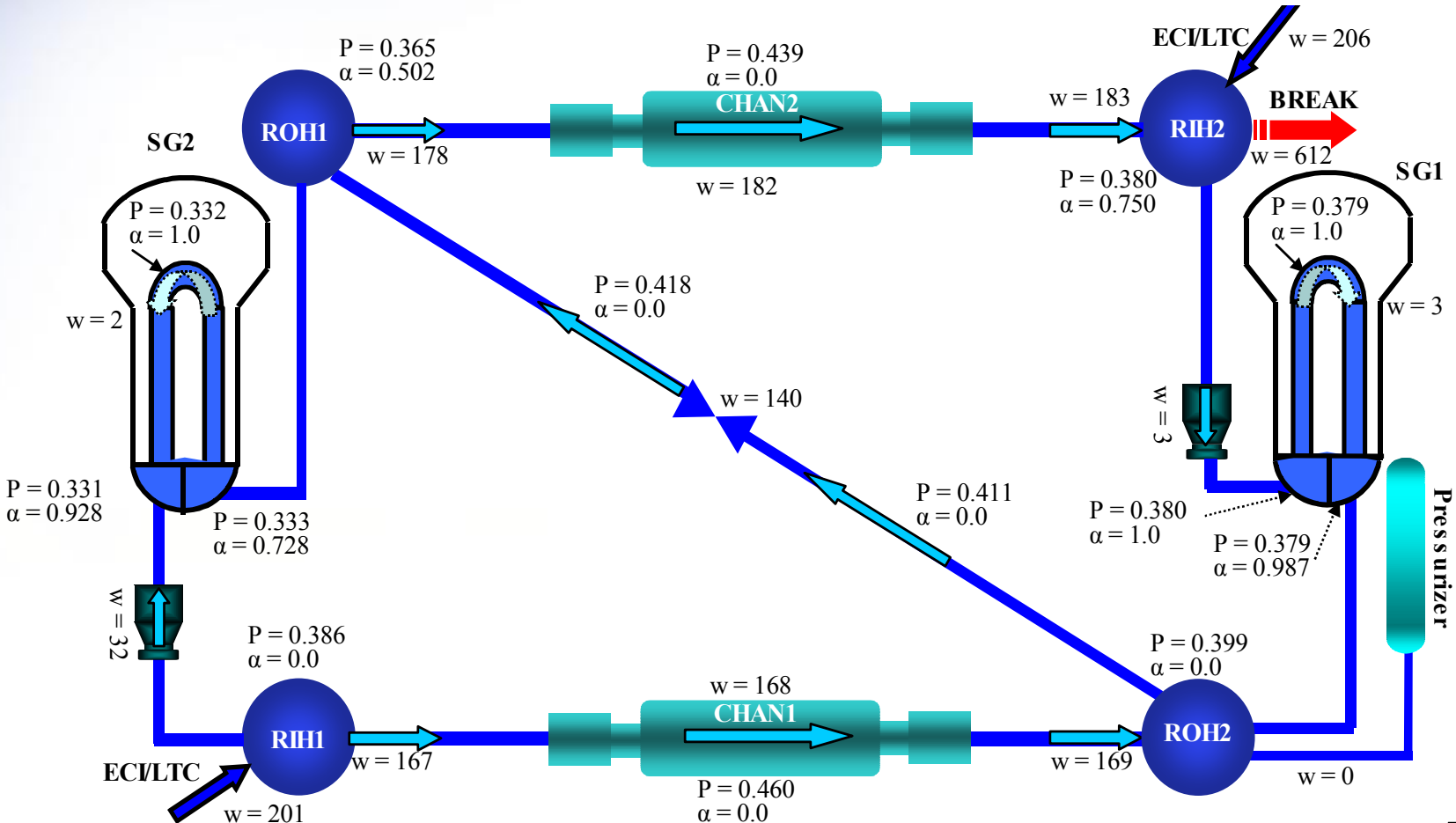

Reactor Coolant System Conditions T = 333 s

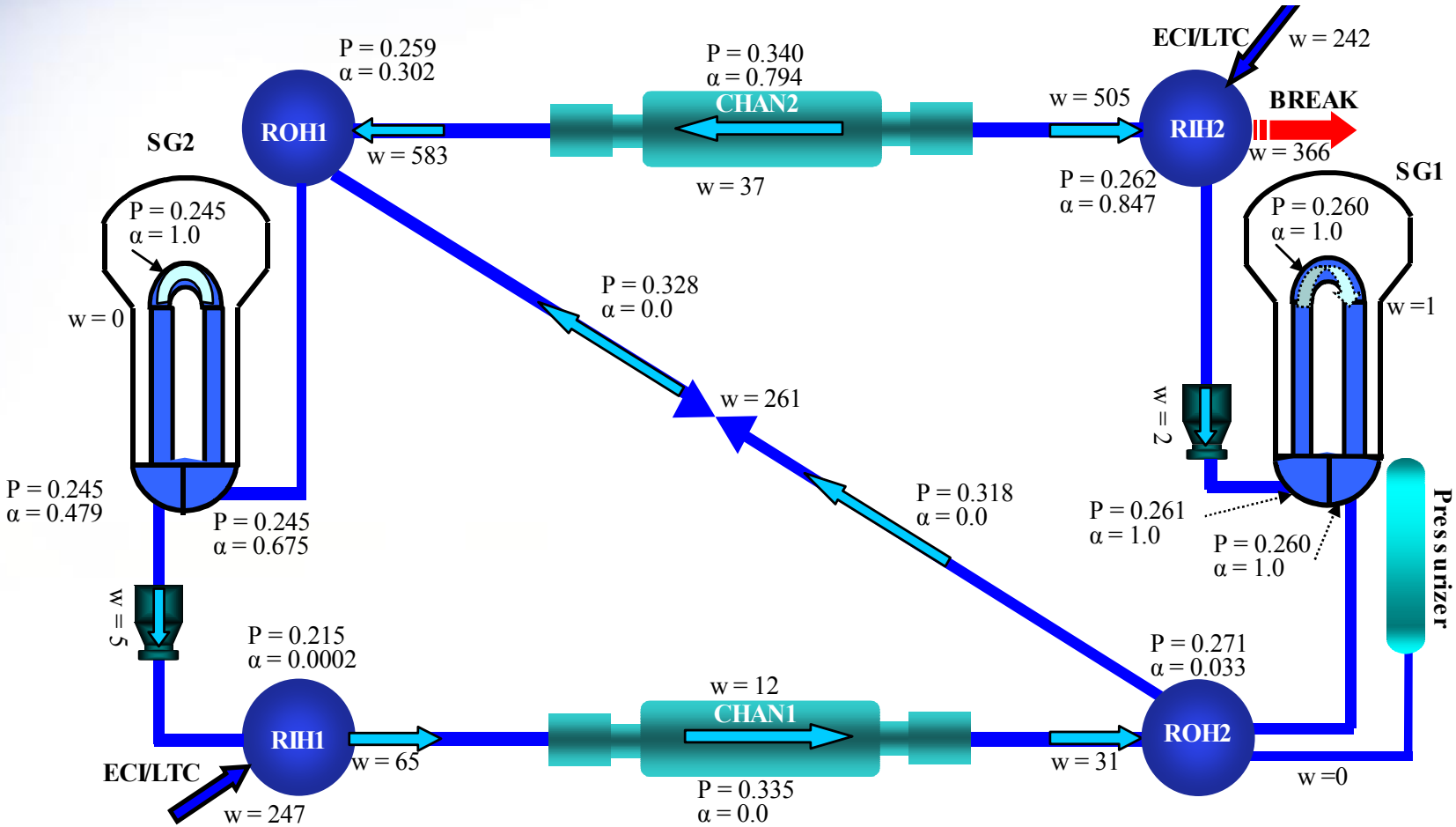

Reactor Coolant System Conditions T = 2000 s

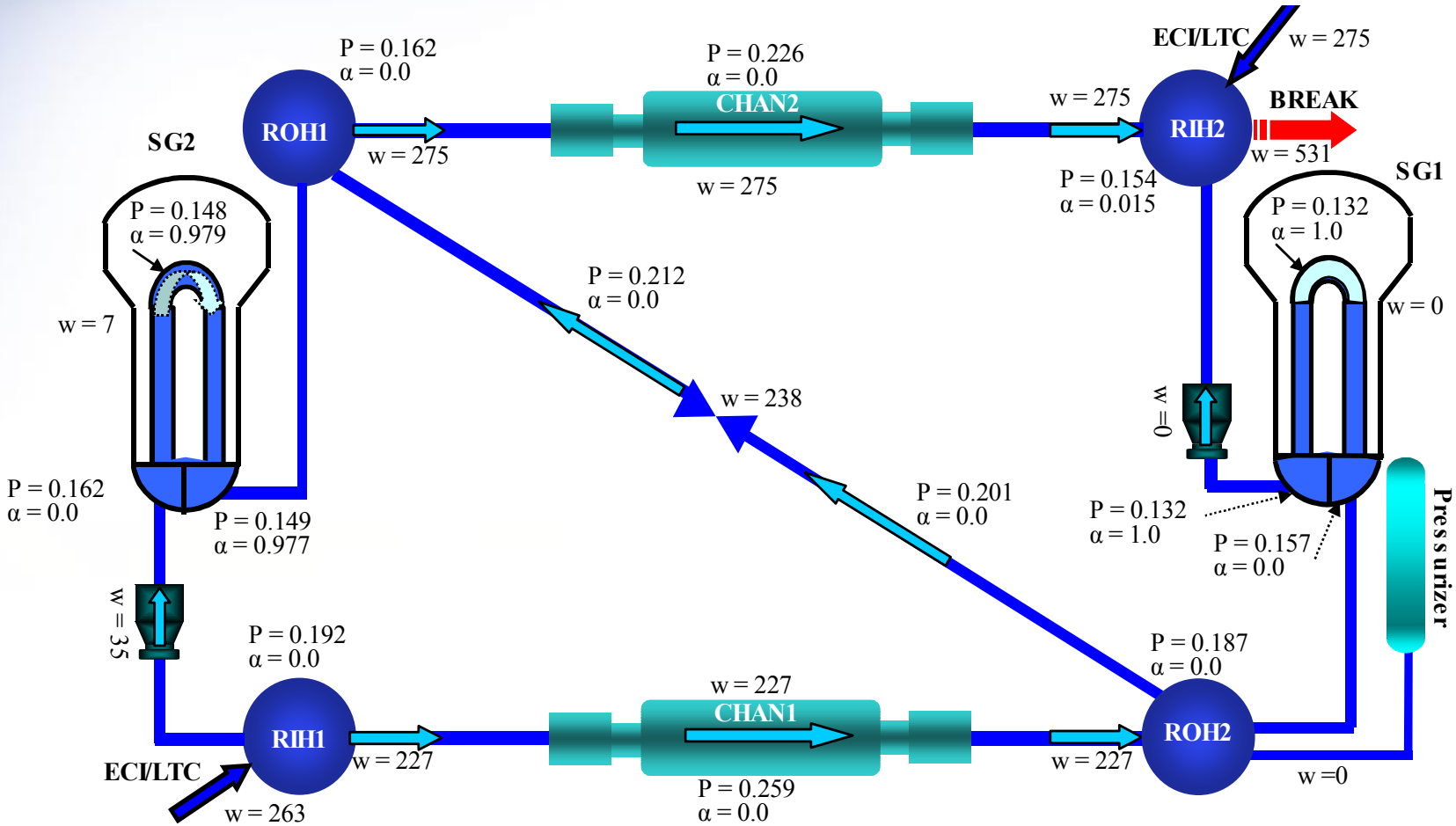

Summary

- ACR-700 postulated critical break large LOCA scenario has been described
- The following has been identified:
  - Processes and phenomena that occur (WHAT)
  - Underlying physics that result in the identified processes and phenomena (WHY)

AECL

TECHNOLOGIES INC.