3rd NRC – AERB Nuclear Safety Projects Meeting
February 23 – 28, 2004

Non-Destructive Examination (NDE) in the Regulatory Process

Edmund J. Sullivan, Senior Materials Engineer
U. S. Nuclear Regulatory Commission
Office of Nuclear Reactor Regulation
Email: ejs@nrc.gov Phone: 301-415-2796

NDE Background

- Identify potential degradation or flaws
- Characterize flaws – length, depth, width, location
- Determine the structural integrity of affected component
- Assess flaw growth rates, if flaws left in service

NDE Challenges

- UT technical challenges
  - Dissimilar metal welds
  - Complex grain structures
  - Metal surface conditions
  - Other discontinuities (transitions, welds)
  - Limiting radiation exposure
- Regulatory challenge
  - ASME Code inspection rules significantly lag operating experience

NDE Requirements

- ASME Boiler and Pressure Vessel Code
  - Section III - Construction
  - Section V – Non-Destructive Examination
  - Section XI – Preservice and Inservice Inspection
- ASME Code incorporated by reference in NRC regulation, i.e., 10 CFR 50.55a
- Additional NDE requirements in 50.55a

Organization of Section XI

- General Requirements Section
  - Scope and Responsibility
  - Examination and Inspection
  - Standards for Examination and Evaluation
  - Repair/Replacement Activities
  - System Pressure Tests
  - Records and Reports
  - Glossary

Organization of Section XI

- Specific parallel requirements for Class 1, 2, 3 components, containment structures, and component supports

- Mandatory appendices

Organization of Section XI

- Appendix I – Ultrasonic examination (UT)
- Appendix III – UT of vessels not greater than 2 inch. in thickness
- Appendix VII – Qualification of NDE personnel for ultrasonic examination
- Appendix VIII – Performance demonstration for ultrasonic examination systems

Organization of Section XI

- App I directs user to ASME Section V for UT of vessels greater than 2-inch. in thickness (e.g., steam generator and pressurizer welds)
- App. I directs user to App. III for UT of vessels not greater than 2 inch. in thickness (e.g., heat exchanger and water tank welds)

Organization of Section XI

- App. III and Section V are prescriptive-based
  - Requirements for transducer angles, scanning patterns, calibrations
  - Procedure qualification based on side-drilled holes or notches in calibration blocks

Appendix VIII

- App. I directs user to App. VIII for UT of:
  - Pipe welds
  - Overlaid piping welds
  - Clad / base metal interface
  - Nozzle Inside Radius Sections
  - Vessel to nozzle welds
  - RV welds, excluding flange
  - Bolts and studs
- App VIII contains requirements for qualification of procedures, equipment, and personnel

Appendix VIII

- App. VIII is performance-based
  - Controls on essential variables, component configurations, and materials being examined
  - Does not specify transducer types, numbers of, or angles
  - Qualification screening criteria established on a statistical basis to recognize/accept good performance

Performance Demonstration Initiative

- U.S. nuclear plant owners pooled resources to implement App. VIII requirements
- PDI administers implementation of program under EPRI
- PDI designs representative test specimens and maintains them
- PDI champions changes to App VIII to address implementation difficulties

Performance Demonstration Initiative

- Develops a generic procedure qualification for the supplements
- Sponsors practice examination and training and administers qualification testing
- Maintains registry of qualified examiners

Risk Informed In-Service Inspection: *Concepts and Methodology*

- Objective of ISI program is to identify degraded conditions that are precursors to pipe failures
  - Regulatory requirements in 10 CFR 50.55a(g)
  - 10 CFR 50.55a(g) references ASME BPV Code Section XI
  - ASME Code requirements did not consider risk
- Inspection resources should be focused in those areas which are most safety and risk significant
  - Types, locations of failures that are most likely
  - Failures that would have the most severe consequences

RI-ISI Process Overview

- Divide systems into piping segments
- Evaluate consequences of each segment's failure
- Determine failure potential of each segment
- Categorize risk significance of each segment
- Select welds and elements for inspection
- Assess impact on measures of risk
  - Core Damage Frequency (CDF)
  - Large Early Release Frequency (LERF)
- Demonstrate conformance with RG 1.174

RI-ISI - Relevant Documents

- NRC Regulatory Guide (Reg Guide) 1.178, Sept. 2003

  "An Approach For Plant-Specific Risk-Informed Decisionmaking Inservice Inspection of Piping"
- NRC Standard Review Plan (SRP) Section 3.9.8, Sept. 2003

  "Standard Review Plan for Risk-Informed Inservice Inspection of Piping"
- Industry methodologies reviewed, approved by NRC
  - Westinghouse Owners' Group (WOG) Topical Report
  - Electric Power Research Institute (EPRI) Topical Report
- ASME Boiler & Pressure Vessel Code changes
  - ASME BPVC Code Cases (3)
  - ASME BPVC Appendix to Section XI

RI-ISI - Relevant Documents: ASME

- Code Cases
  - Code Case N-560 (Class 1 piping, EPRI Method)
  - Code Case N-577 (Class 1, 2, 3 piping, WOG Method)
  - Code Case N-578 (Class 1, 2, 3 piping, EPRI Method)
- Code Cases not approved by NRC
- BPVC Section XI, Appendix X
  - Class 1, 2, 3 piping - WOG and EPRI Methods
  - Non-mandatory
  - Currently under development

RI-ISI - Status of Implementation

- 67 US plants have been approved to implement, or currently are under review
- Industry-submitted methodologies guiding implementation
  - 1/3 following Westinghouse topical report
  - 2/3 following EPRI topical report
- 99 (of 103) US plants are expected to implement RI-ISI

RI-ISI – Long Term Activities

- Work with industry to revise ASME RI-ISI Appendix X to appropriately reflect contents of the approved Topical Reports and incorporate lessons learned from plant reviews
- Participate in Code activities on risk-informing other Section XI activities beyond inspection of piping

Recent NDE Challenges

- CRD inspections per NRC order
- Davis Besse head degradation
- V.C. Summer and TMI-1 pipe weld cracks
- Vessel lower head penetration inspections

Degradation in Vessel Head Penetrations

- Control Rod Drives above reactor vessel in pressurized water reactors
- Degradation in CRD penetrations in the vessel upper head known since 1980s
- Eddy current initially found axial cracks
- Subsequent leaks and circ cracks
- NRC required actions through bulletins and order

CRD Nozzle Surface Inspection Area

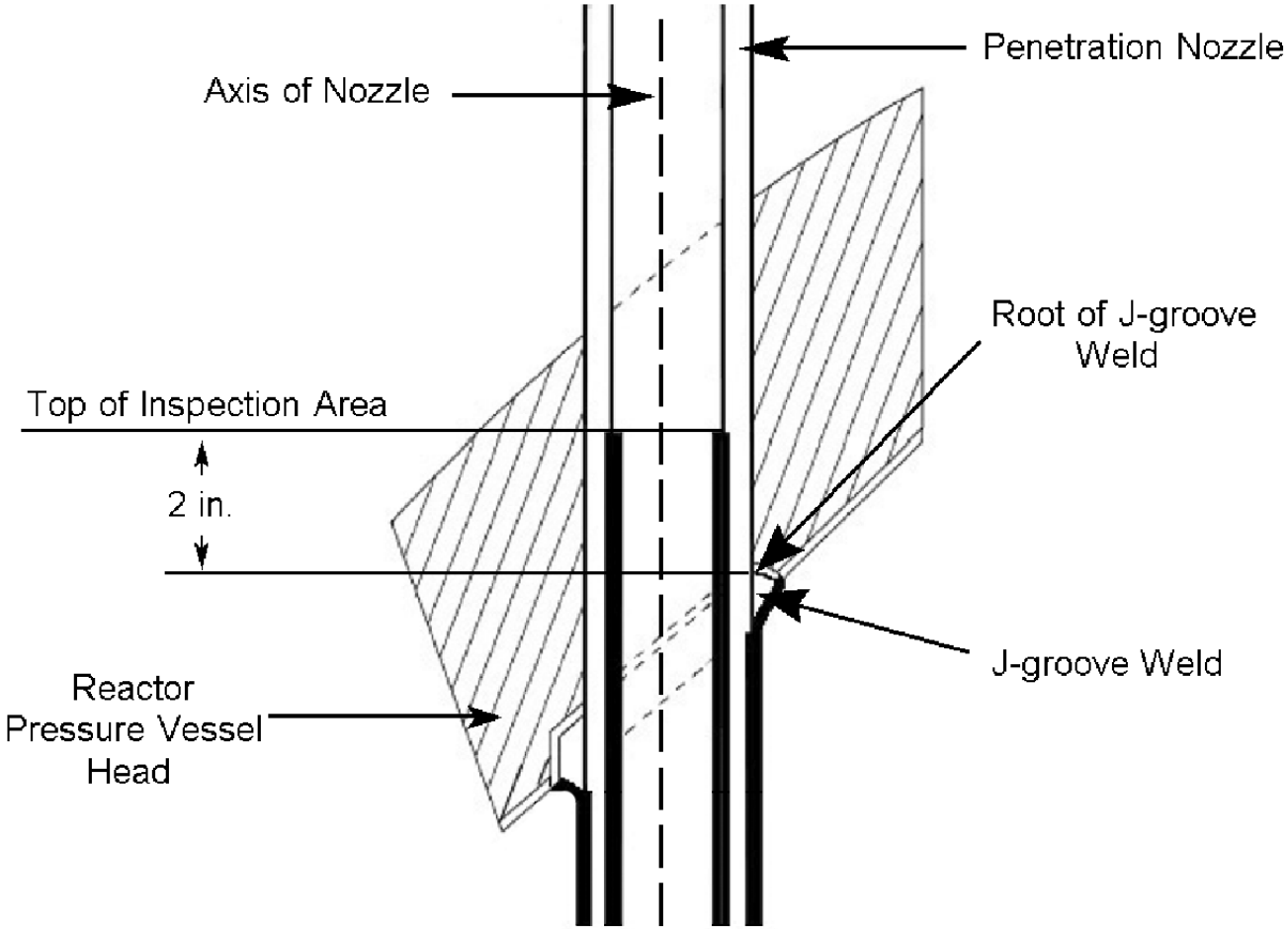

CRD Nozzle Volumetric Inspection Area

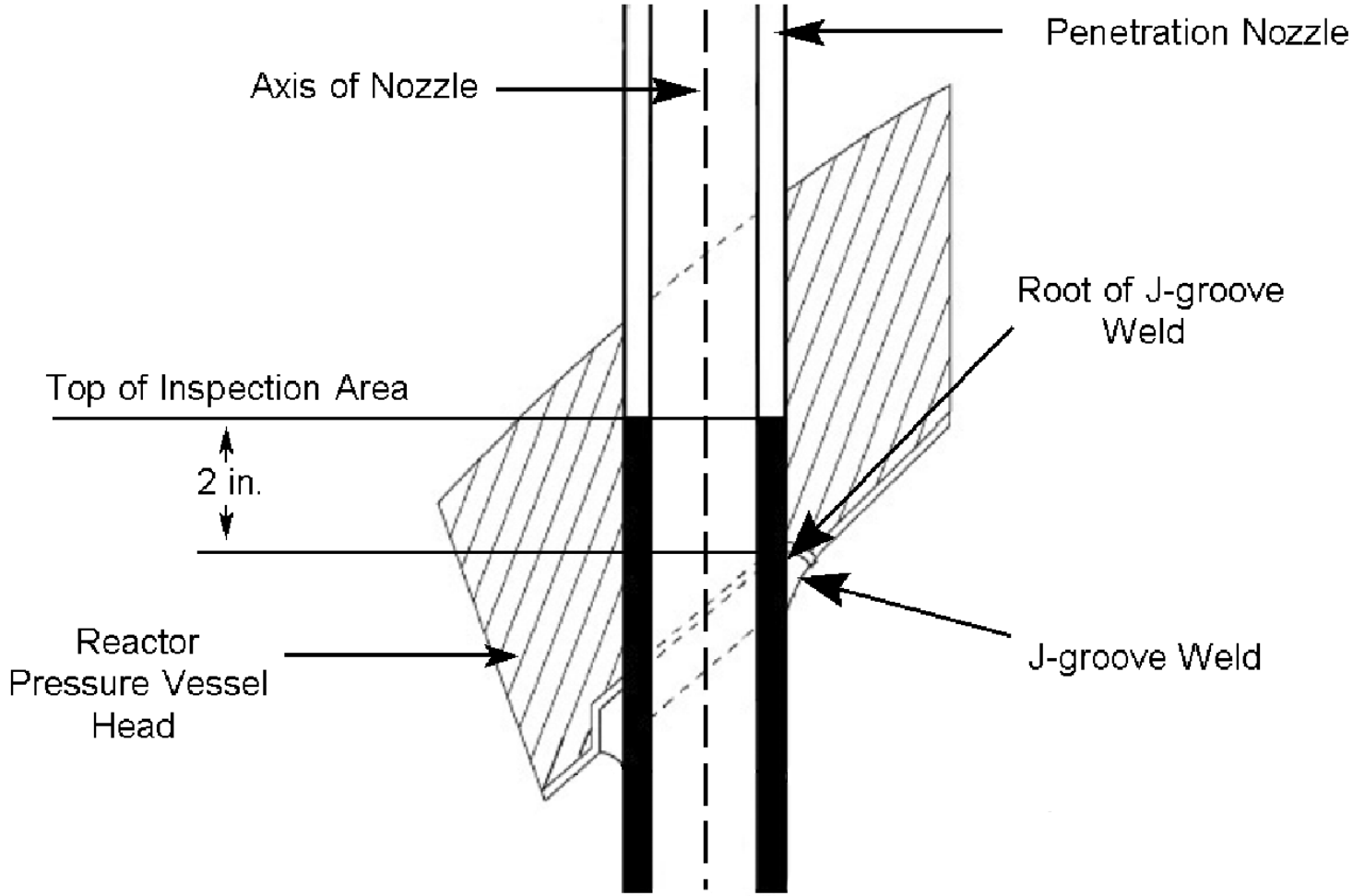

Ultrasonic Test Probe Limitations

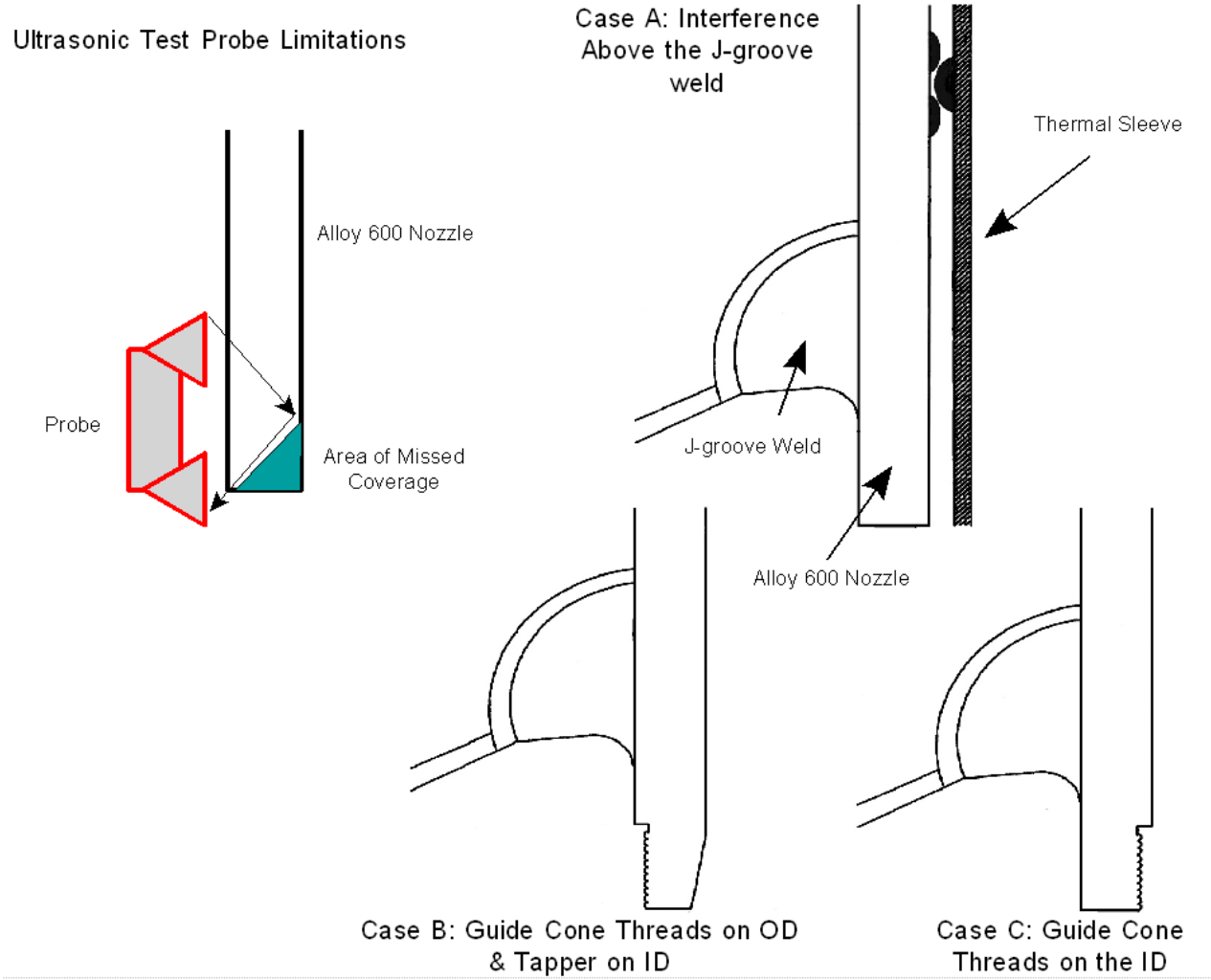

Ultrasonic Scan of CRD Nozzle

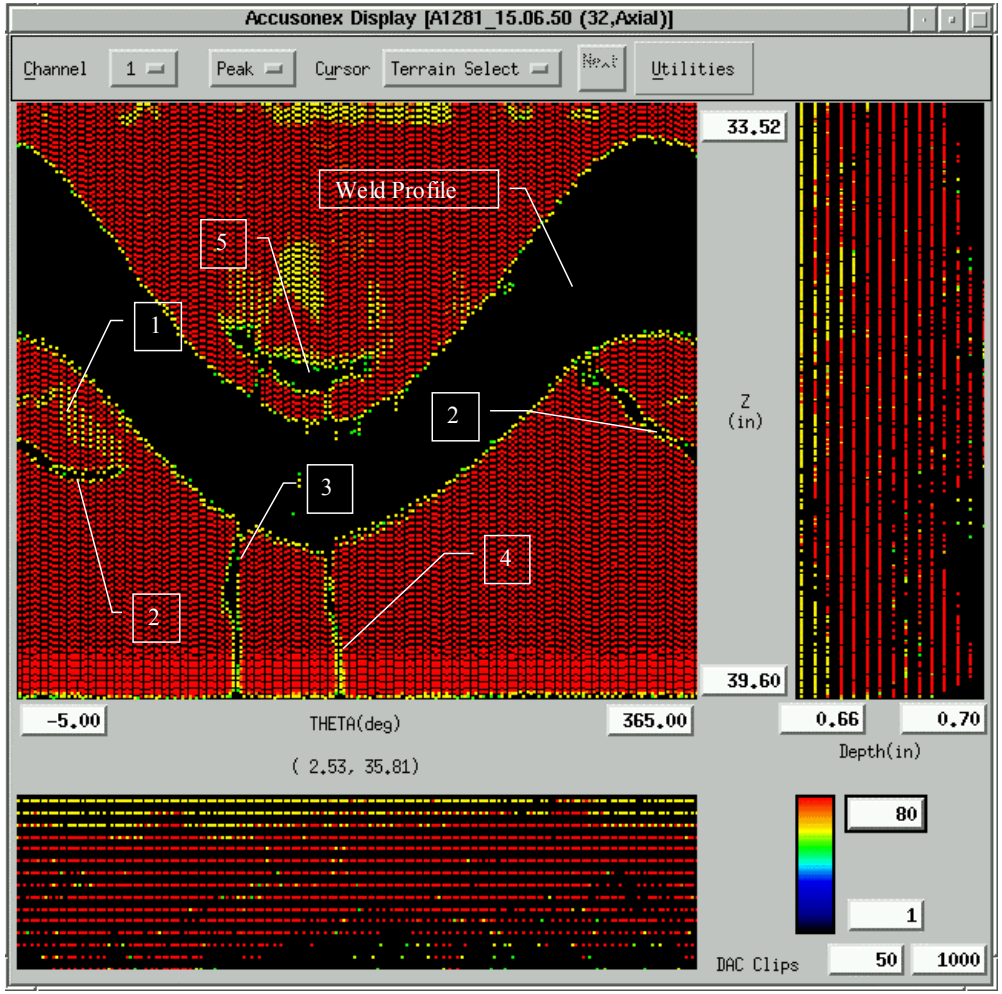

- Black Areas Indicate Sound Transmitted Through the Weld or Scattered by a Crack
- Red Areas Indicate No Degradation
- Axial Cracks #3 and #4 go Through the Weld and Join in Circumferential Crack #5

Davis Besse Head Degradation Location

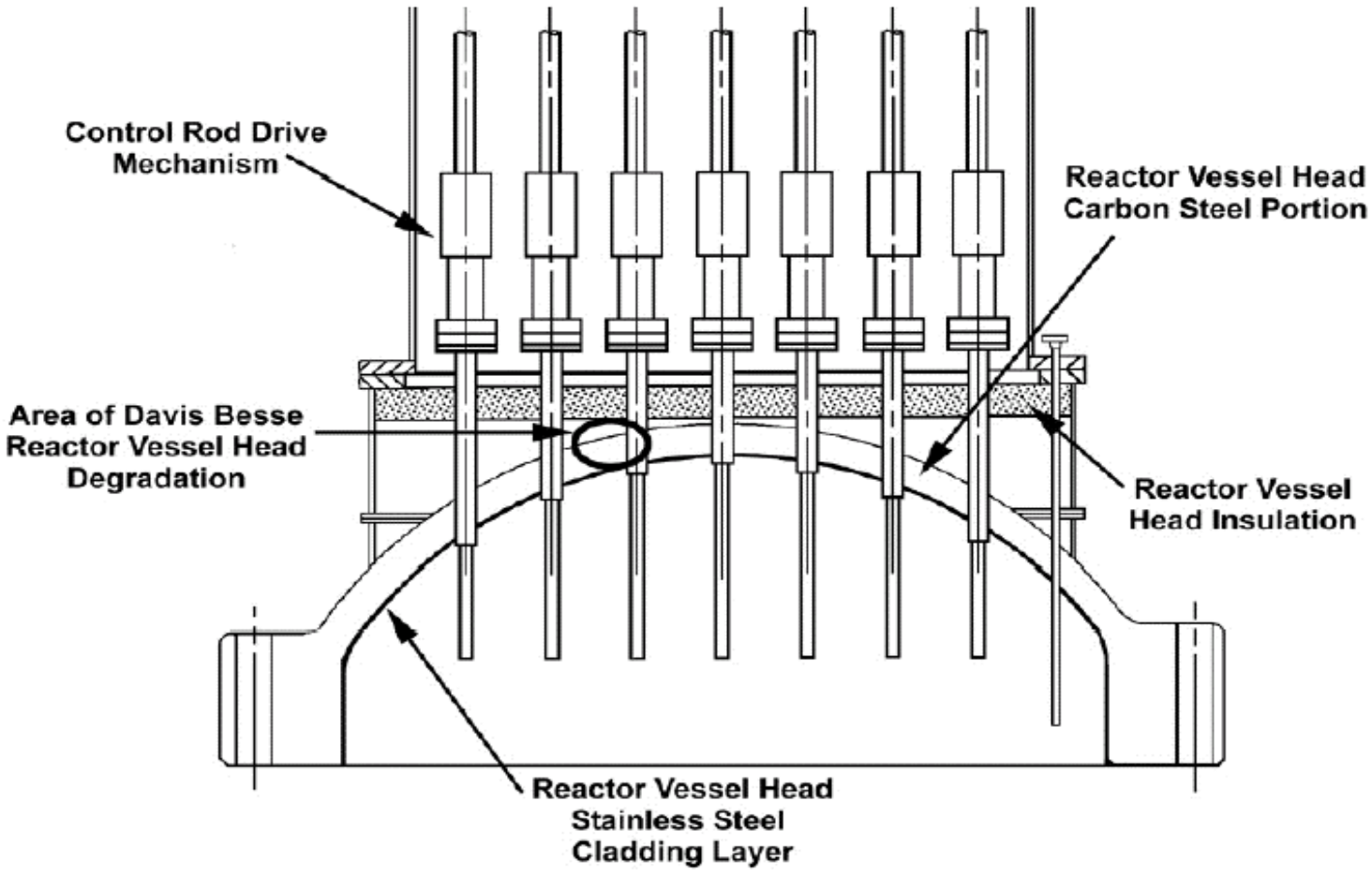

Photograph of Cavity Near Nozzle #3

Sketch of Cavity Near Nozzle #3

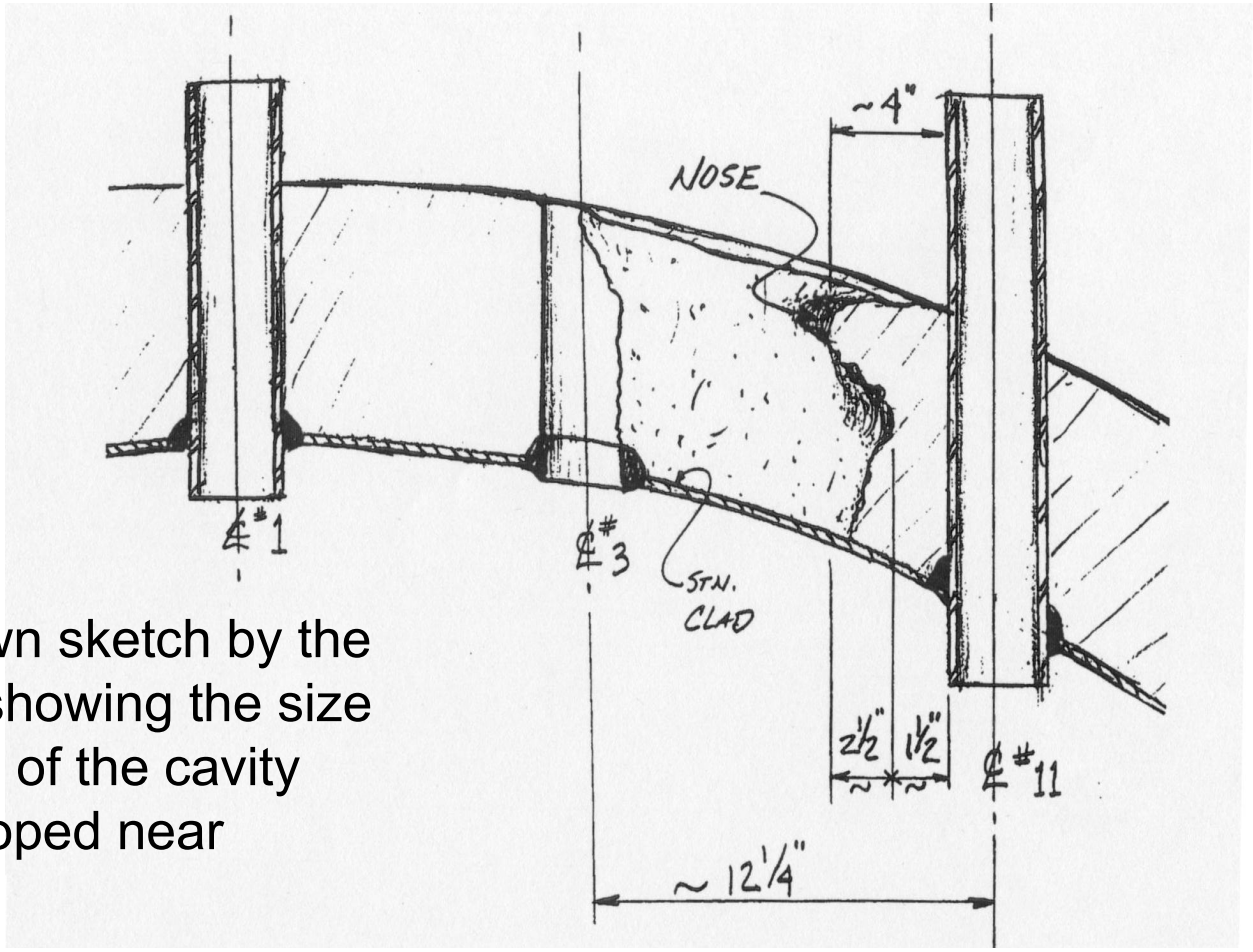

Hand-drawn sketch by the licensee, showing the size and shape of the cavity that developed near nozzle #3

V.C. Summer - Hot leg weld cracking

- Visual: Deposits
- UT: Axial cracks in dissimilar metal weld
- PT: Circumferential crack at weld
- Root Cause: PWSCC, original fabrication repair considered a contributing factor

V.C. Summer: Cross Section of Weld/Butter

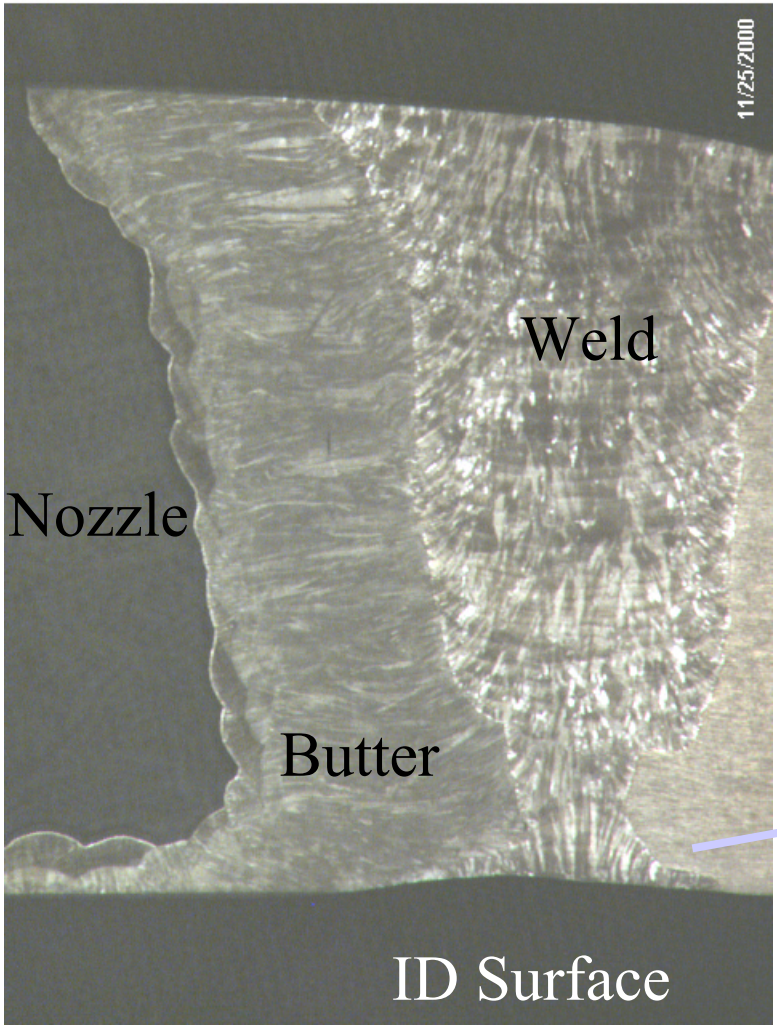

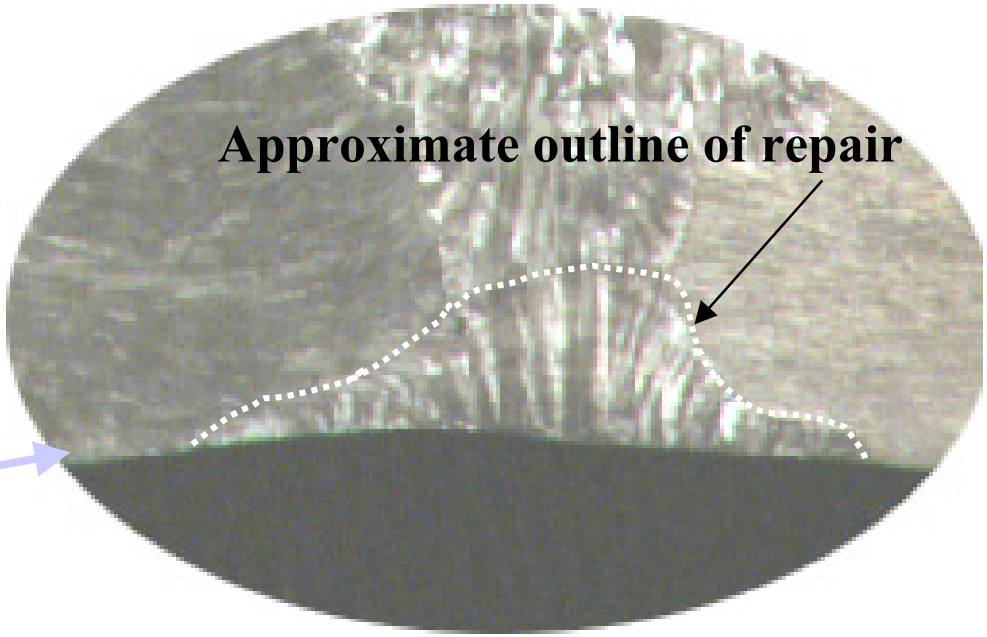

Dissimilar Metal Pipe Welds

- Inspection qualification requirements in Supplement 10 to Appendix VIII
- NRC rules required industry to implement Supplement 10 by November 22, 2002
- PDI successfully qualified exam systems for detection and sizing axial and circ flaws from OD – limitations on geometry and surface condition
- ID scanning successful for detection of circ flaws only

South Texas VLHP Inspection

- UT from penetration tube ID
- Enhanced visual exam of J-groove weld surface
- Volumetrically interrogate vessel base metal for wastage
- ET from penetration tube ID
- ET of J-groove weld surface

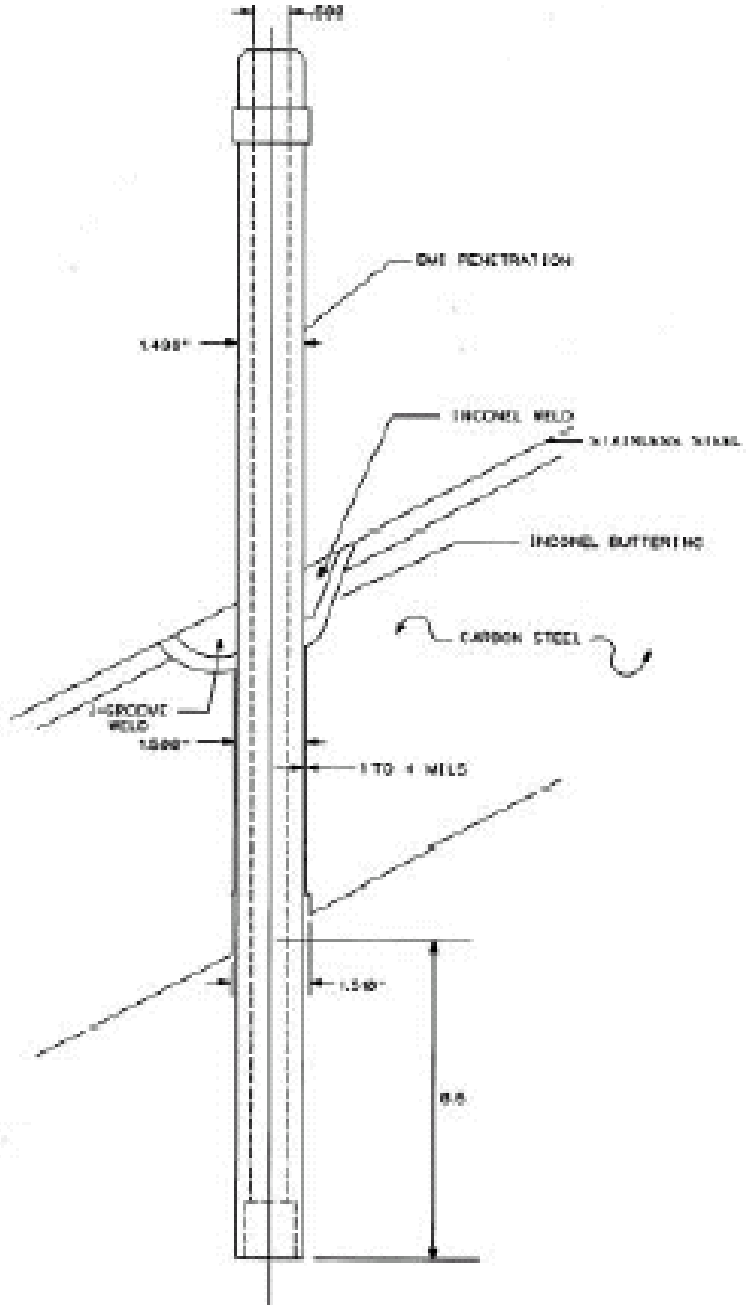
.500
DWI PENETRATION
1.495"
INCONEL WELD
INCONEL BUTTERING
CARBON STEEL
J-GROOVE WELD
1.000"
1 TO 4 MILS
1.510"
8.5

South Texas VLHP In-vessel Inspection Tooling

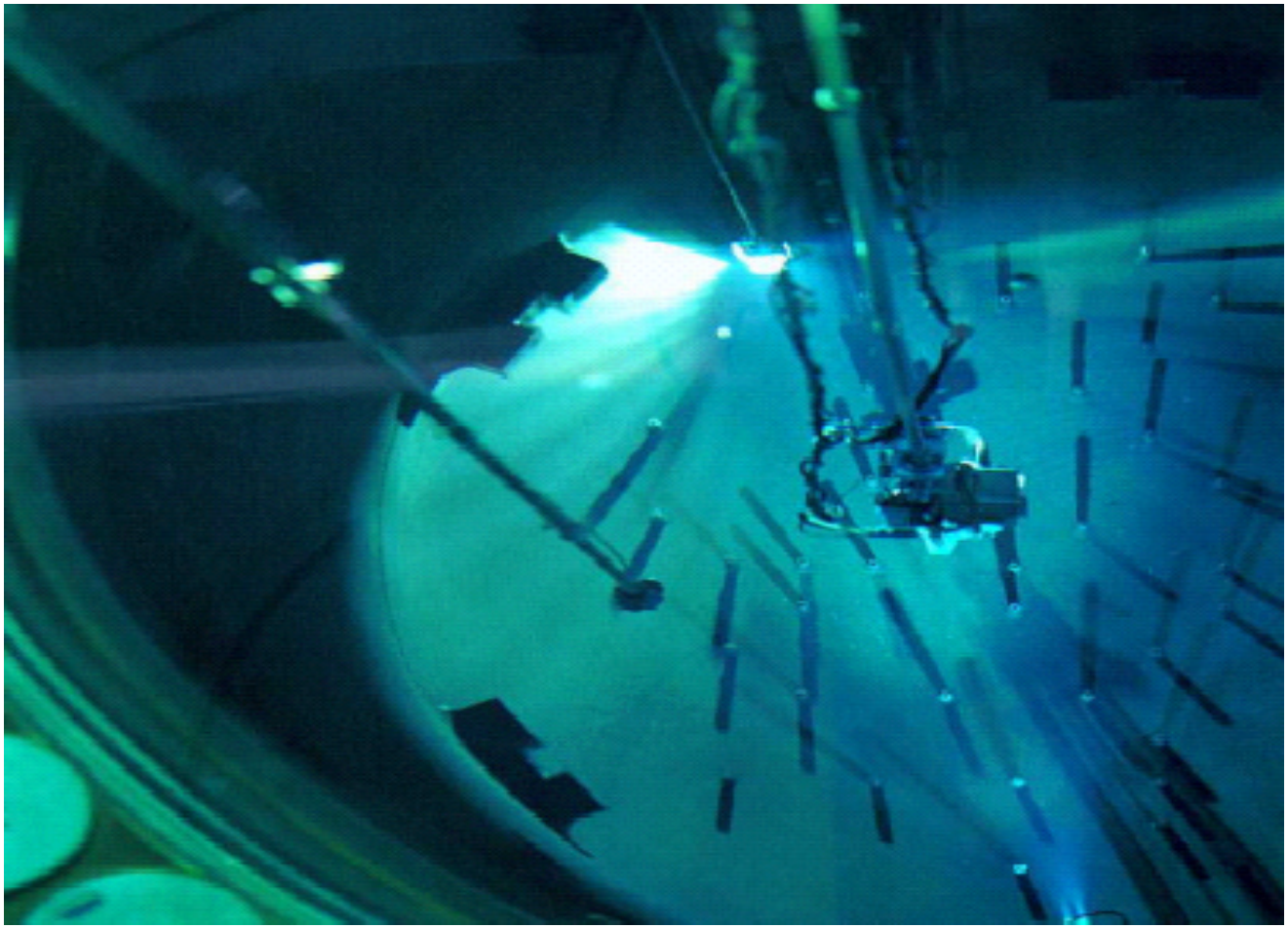

South Texas VLHP Examination for Wastage

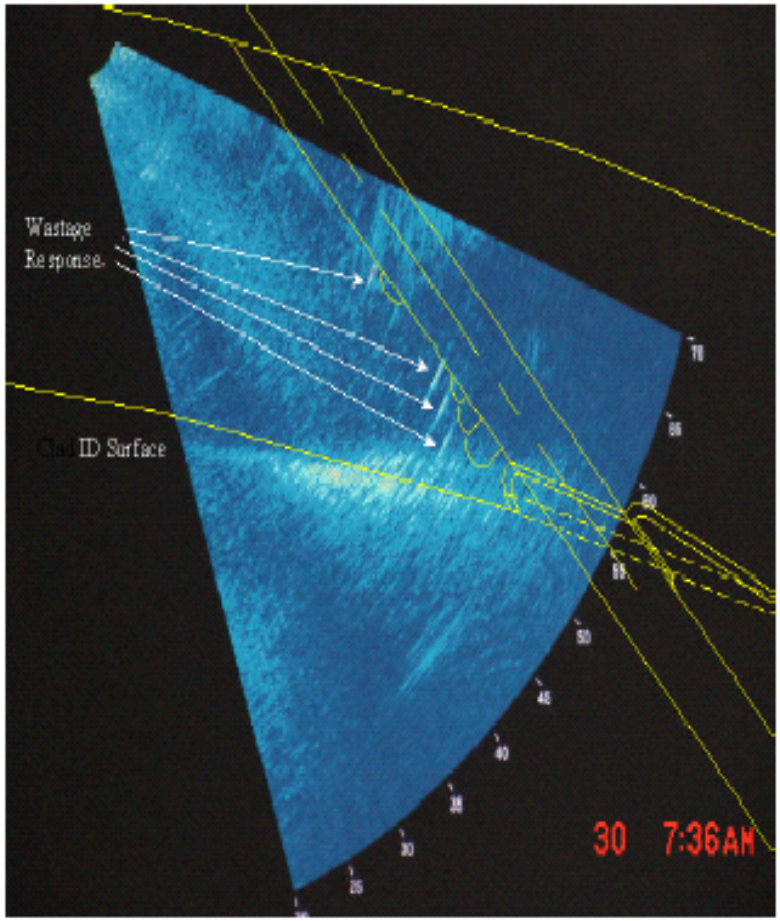

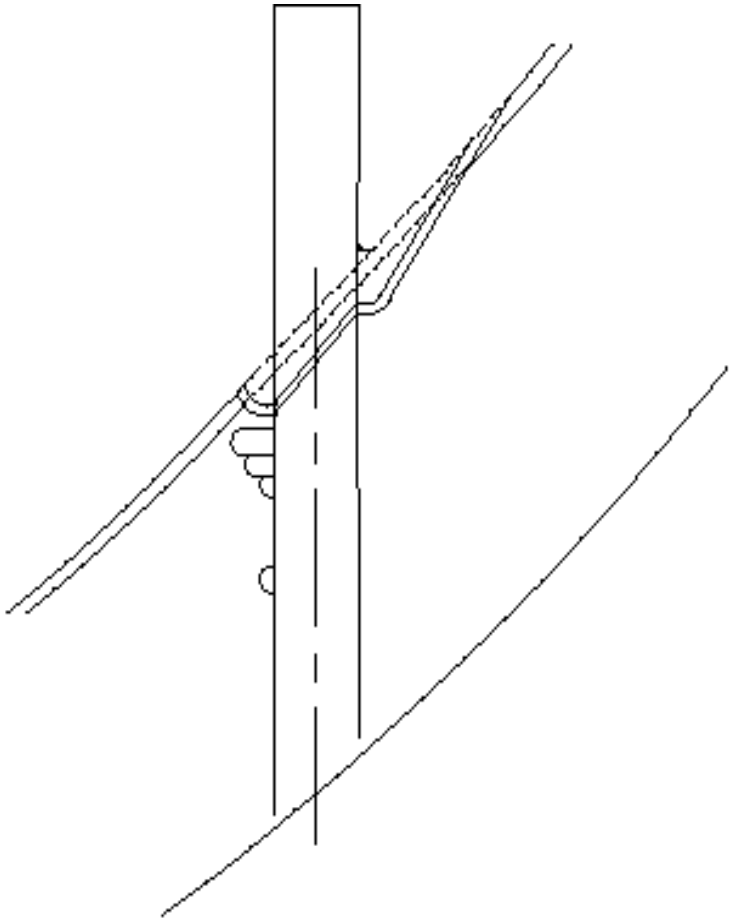

South Texas VLHP Inspection
Eddy Current