NTS-983

Log Date 2/28/83

② Seamans

UCRL-53367

Test Completion Plan for Spent Fuel Test—Climax, Nevada Test Site

L. B. Ballou

W. C. Patrick

D. N. Montan

T. R. Butkovich

September 30, 1982

Lawrence Livermore National Laboratory

Work performed under the auspices of the U.S. Department of Energy by Lawrence Livermore National Laboratory under Contract W-7405-Eng-48.

UCRL-53367
Distribution Category UC-70

Test Completion Plan for Spent Fuel Test—Climax, Nevada Test Site

L. B. Ballou

W. C. Patrick

D. N. Montan

T. R. Butkovich

Manuscript date: September 30, 1982

LAWRENCE LIVERMORE LABORATORY
University of California • Livermore, California • 94550

Available from: National Technical Information Service • U.S. Department of Commerce
5285 Port Royal Road • Springfield, VA 22161 • $7.00 per copy • (Microfiche $3.50)

CONTENTS

TEST COMPLETION PLAN FOR
SPENT FUEL TEST--CLIMAX, NEVADA TEST SITE

ABSTRACT

The Spent Fuel Test--Climax is being conducted 420 m below surface in the quartz monzonite unit of the Climax granitic stock at the U.S. Department of Energy's Nevada Test Site. This test, which is under the technical direction of the Lawrence Livermore National Laboratory, was initiated in June 1978. Eleven spent-fuel assemblies from an operating commercial nuclear reactor were emplaced in test storage at the facility in April and May 1980.

Technical data acquired during the first 2 years of the test indicated that all original test objectives will be met with a 3-year storage phase followed by post-retrieval cool-down, sampling, and analysis.

This report describes the facility, the current status of test objectives, and the proposed post-retrieval monitoring and sampling of the test area. Current plans concerning decommissioning and future utilization of the facility are also presented.

CHAPTER 1

SUMMARY

The Spent Fuel Test--Climax (SFT-C) was funded in June 1978 by the U.S. Department of Energy to provide a demonstration of safe and reliable storage and retrieval of spent fuel from commercial nuclear power plants. The test also addressed several technical issues related to the qualification of granite as a medium for deep geologic storage and the design of a repository in granite.

Eleven spent fuel assemblies were placed in temporary storage at the SFT-C in April and May 1980, starting a planned 3- to 5-year storage phase of the test. Technical data acquired during the first 2 years of storage indicate that all test objectives will be met with a 3-year storage phase followed by post-retrieval cool-down, sampling, and analysis.

Given this technical justification and supporting DOE guidance, we plan to retrieve the spent fuel from the SFT-C and return it to lag storage at the Engine Maintenance, Assembly, and Disassembly Building (EMAD) between late-February and mid-April 1983. The test completion plan for retrieval and post-test monitoring, sampling, and analysis comprises nine work elements:

1. Spent-fuel retrieval
2. Removal of storage hole liners
3. Geological characterization
4. Geological sampling and testing
5. Metallurgical sampling and testing
6. Thermal and thermomechanical response measurements
7. Instrument calibration and evaluation
8. Facility decommissioning
9. Preparation of annual interim, topical, and final reports.

The following are important features of the test completion schedule:

- All objectives of the SFT-C as detailed in Chapter 3 will be met.
- The spent-fuel assemblies will be retrieved and returned to EMAD lag storage during late-February to mid-April 1983.
- Active Westinghouse-EMAD support to the SFT-C will not be required after the third quarter of FY83. (Note that continuing surveillance of the fuel assemblies after that time is not an SFT-C budget activity or responsibility.)

- All SFT-C facilities and equipment will be either mothballed in place or removed from Area 15 by the end of FY84, as discussed in Chapter 7. No subsequent field support costs are anticipated.
- FY85 activity is limited to preparation and publication of the final topical and summary reports.
- A total of 10 topical reports in addition to two more annual interim reports and a final summary report will be prepared during the FY83-85 period. All LLNL effort is scheduled to be completed by mid-FY85.

CHAPTER 2

INTRODUCTION AND BACKGROUND

The Spent Fuel Test--Climax (SFT-C) is being conducted for the U.S. Department of Energy under the technical direction of the Lawrence Livermore National Laboratory (LLNL). The test was funded in June 1978 to demonstrate the feasibility of short-term storage and retrieval of spent fuel from a commercial power reactor in a deep geologic environment. A technical concept was developed to guide construction, operations, and scientific investigations associated with the test (Ramspott et al., 1979).

Site characterization and development progressed in parallel with installation of instrumentation and fabrication of a fuel handling system. These activities led to emplacement of 11 spent-fuel assemblies during April and May 1980. The spent fuel was emplaced in lined storage holes located in a linear array 420 m below ground surface. Periodic exchanges of spent-fuel canisters between the subsurface facility and a surface drywell storage location demonstrated the retrieval objective of the test.

2.1 SITE CHARACTERIZATION

The Climax stock, in which the SFT-C is located, is a two-part intrusive consisting of a granodiorite and a quartz monzonite unit. The test is located entirely within the latter unit.

Initial site characterization activities relied on data available from geological investigations conducted in support of nuclear weapons effects tests at the experiment site. Prior to the excavation for the facility, four 76-mm-diameter (NX) core holes were bored to explore the region surrounding the proposed SFT-C facility. Additional cores, drilled to produce instrumentation and heater emplacement holes, were also logged (Wilder, Yow, and Thorpe, in preparation).

The results of current investigations show general agreement with previous work. The frequency of open fractures (which are predominantly high angle) varies from 0.3-1.1/ft (1.0-3.6/m). The frequency of closed, healed fractures (which are predominantly low angle) varies from 0.3-3.3/ft (1.0-10.8/m). Fracture orientation data were not obtained because coring techniques were applied which produced unoriented data.

Fracture mapping of the new excavations was carried out in considerable detail (Wilder and Yow, 1981). Over 2500 features have been mapped. Structurally significant geologic features, primarily faults and shear zones, have been identified for incorporation in computer models of the response of the facility to excavation (Heuze, Butkovich, and Peterson, 1981(a).

Analysis of both the core logging and the fracture mapping data is currently in progress. These analyses will be the subject of future reports. Pending these results we utilize Maldonado's studies (1977), which indicated the presence of three joint sets: N32W, 22NE; N64W, near vertical; and N35E, near vertical.

The SFT-C is located above the regional water table. The rock is unsaturated and appears to be dry except where water-bearing fractures and faults intersect the workings. Limited hydrological investigations have established that the regional water table is about 145 m below the test area (Murray, 1981).

Both laboratory and in situ tests of rock properties have been conducted to supply data for calculating the thermal and thermomechanical response of the SFT-C. Laboratory investigations provided elastic and thermal expansion properties (Heard and Page, 1981) and thermal transport properties (Durham and Abey, 1981). Montan and Bradkin (in preparation) report the results of Heater Test 1 in which in situ thermal properties were determined. Field studies by Heuze et al. (1981b) provided in situ elastic properties. In situ stress measurements were obtained by Ellis and Magner (1982) by the overcore technique, and have since been augmented by limited hydraulic fracturing studies (Ellis, in preparation). Best estimates of these properties and stresses were used in the as-built calculations and were also used in the thermal and thermomechanical post-test response calculations reported here.

2.2 SITE DEVELOPMENT AND FACILITIES

Location of the SFT-C took advantage of an existing personnel and materials shaft, headframe, ventilation system, and related surface plant which had been developed to support nuclear weapons effects testing (Ramspott et al., 1979). Construction activities at the site were initiated by drilling a 762-mm-diameter access hole through which spent fuel would be lowered to the 420-m test level (Patrick and Mayr, 1981). Underground construction was

preceded by the drilling of four exploratory holes from existing underground workings. Approximately 6700 m^3 of granite was excavated to form the 6.1-m-high × 4.6-m-wide spent-fuel canister storage drift and the two parallel 3.4 × 3.4-m heater drifts (Fig. 1).

Surface construction activities included office and data acquisition system (DAS) support facilities. A headframe, hoist, and control room were fabricated at the site of the newly constructed canister access hole (Fig. 2).

Uninterruptible power supplies (UPS) were installed at surface and subsurface locations to provide continuous operation of the radiation monitoring systems and to ensure continuous acquisition of test data.

2.3 CURRENT INSTRUMENTATION

The instrumentation plan was developed to measure critical operational, health and safety, and technical aspects of the test (Brough and Patrick, 1982). A dual HP1000 disc-based minicomputer data acquisition system and associated hardware and software were developed to ensure reliable acquisition of quality data (Nyholm, Brough, and Rector, 1982).

Operational aspects of the test are monitored with devices which provide status of the UPS, DAS, and temperatures within environmentally controlled areas.

Health and safety monitoring is performed primarily by remote area monitors (RAM's) and continuous air monitors (CAM's).

Heat transfer within the test array is measured with over 500 thermocouples, thermistors, and resistance temperature devices (RTD's). The density of measurement points is greatest near the thermal sources and in the air stream where gradients are steep (Fig. 3) and decreases at increasing distances from the sources (Fig. 4).

Displacement and stress measurement devices are deployed throughout the facility at nearly 200 locations (Fig. 5). Once again, instruments were concentrated in selected locations and more sparsely spaced throughout the rest of the test array. The criterion for locating arrays of displacement instrumentation was to monitor regions of relatively infrequent fracturing and other regions of intense fracturing and shearing. Additional displacement devices are sited to measure discrete joint motions and integrated drift convergence. Stress measurements are concentrated at two locations near spent-fuel canisters and two locations in the north pillar.

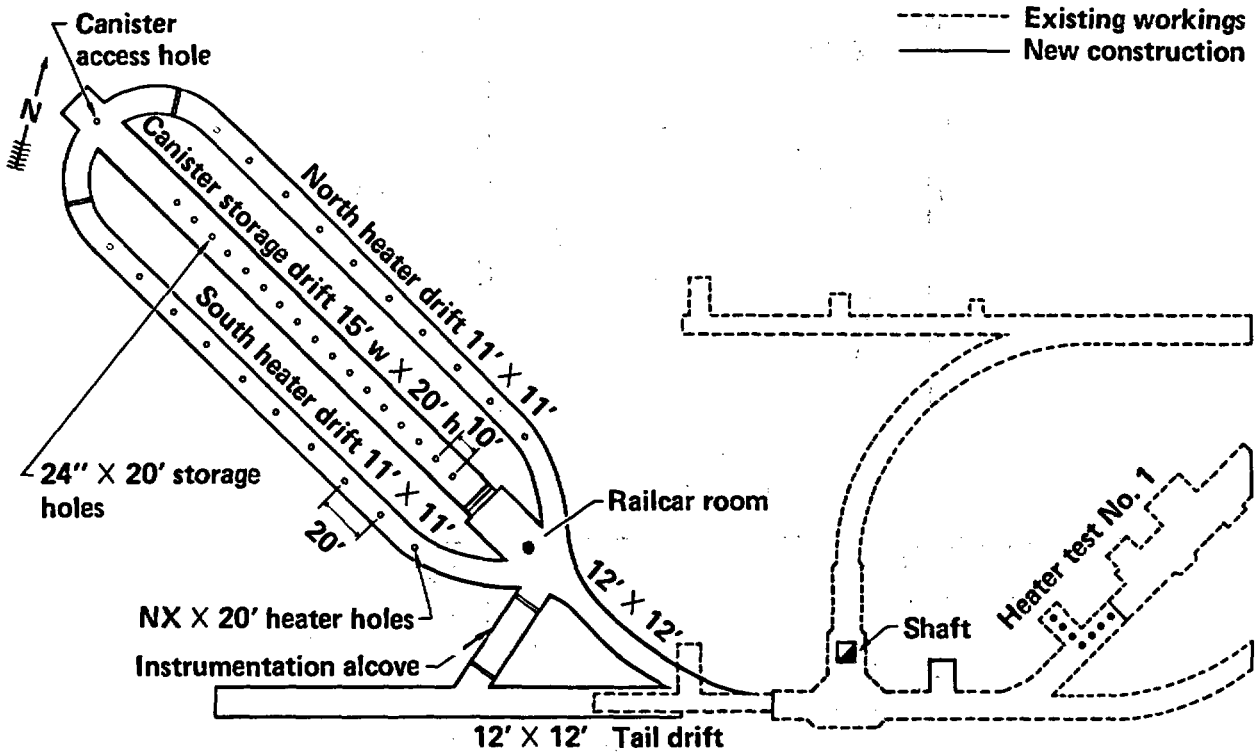

Figure 1. Plan view of subsurface facility, Spent Fuel Test--Climax.

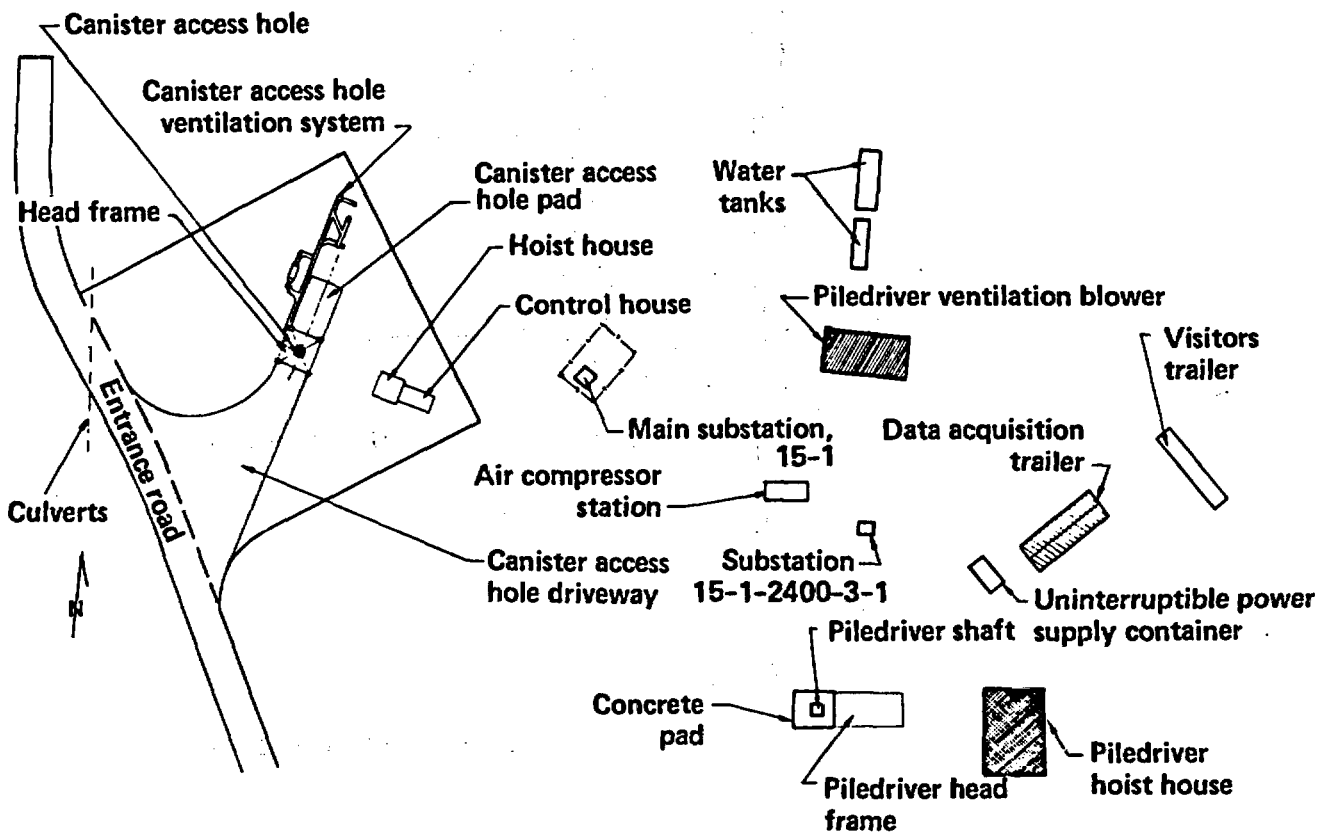

Figure 2. Plan view of surface facility, Spent Fuel Test--Climax.

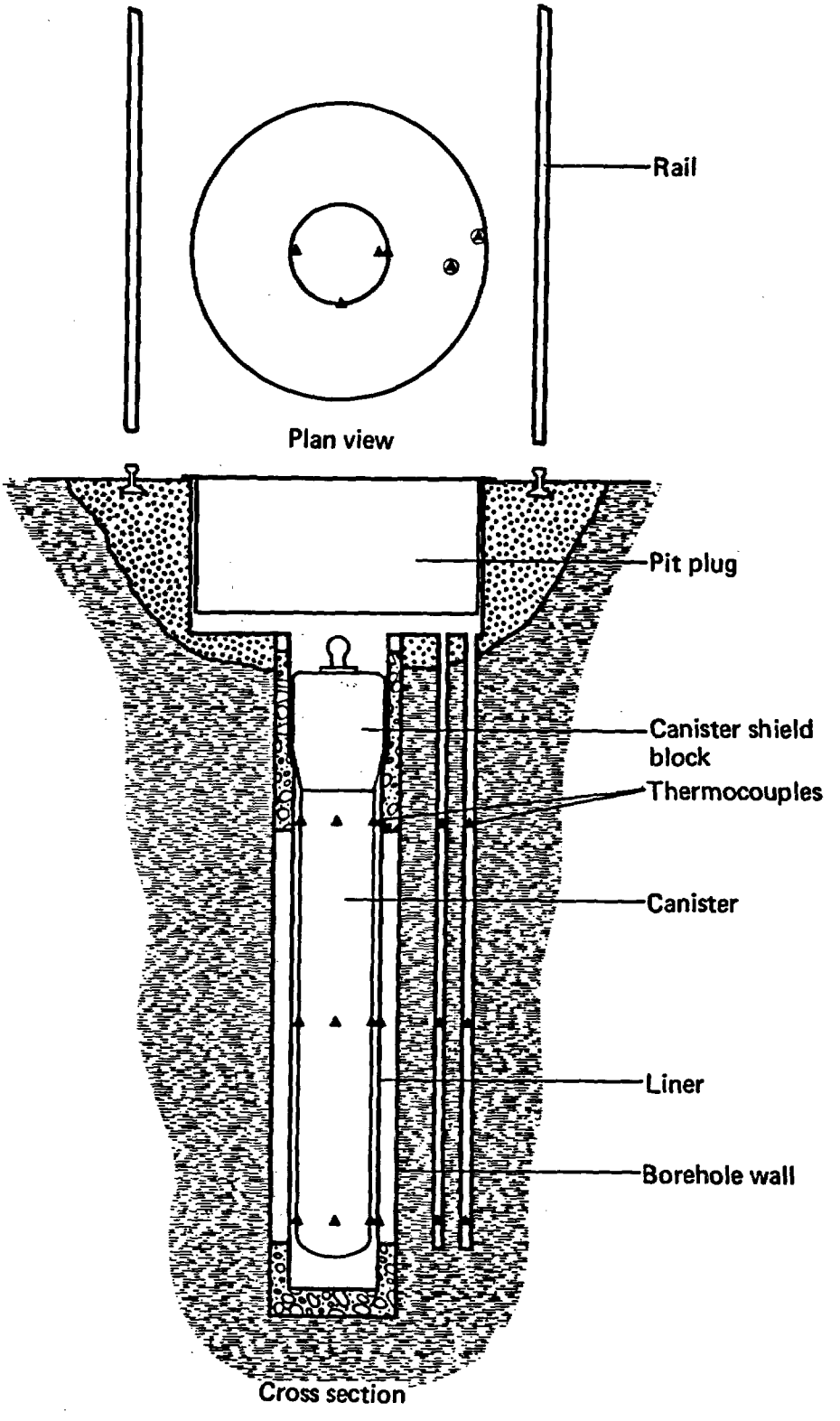

Figure 3. Spent Fuel Test--Climax, showing location of near-field thermocouples.

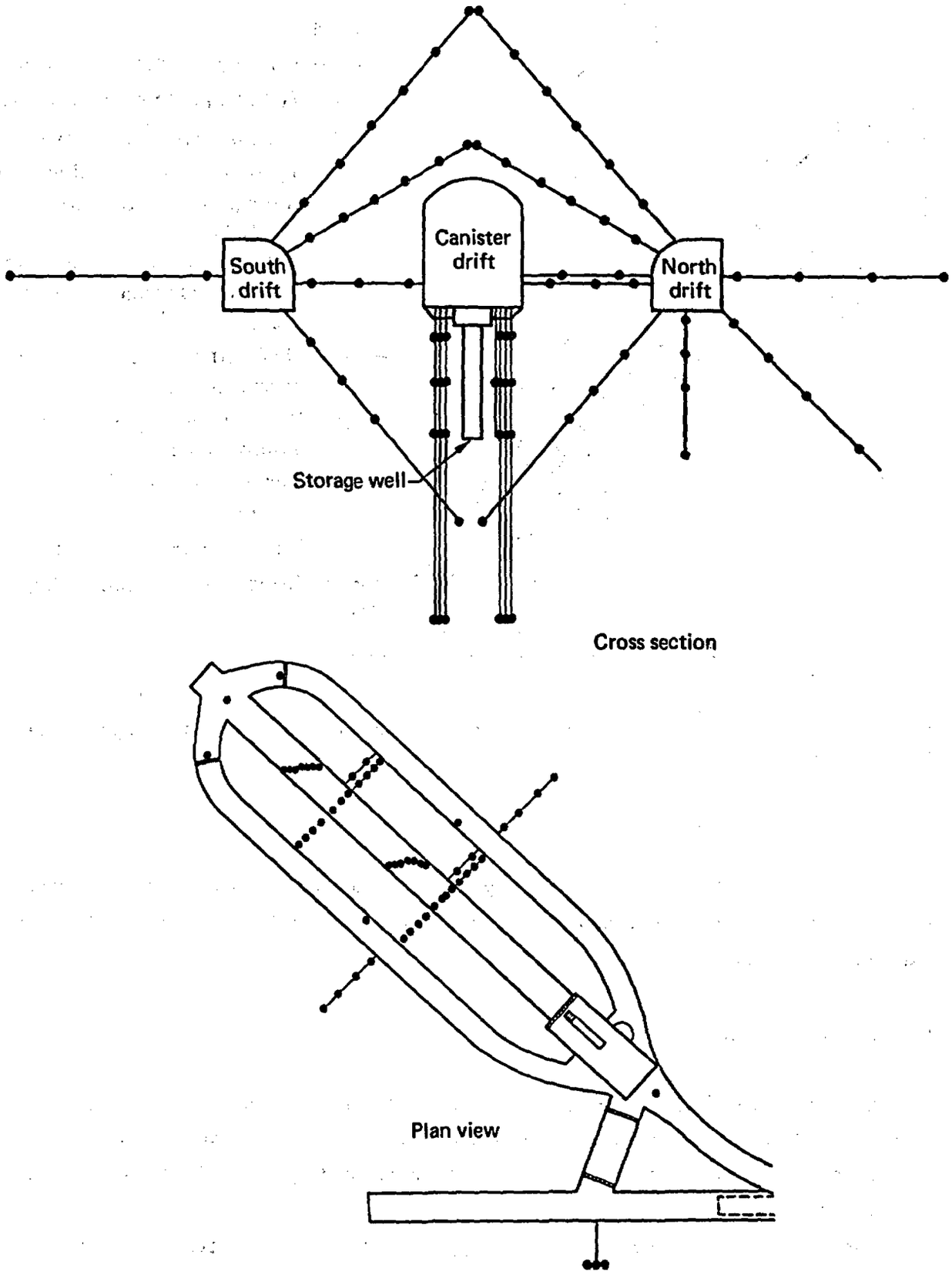

Figure 4. Spent Fuel Test--Climax, showing location of intermediate-field thermocouples.

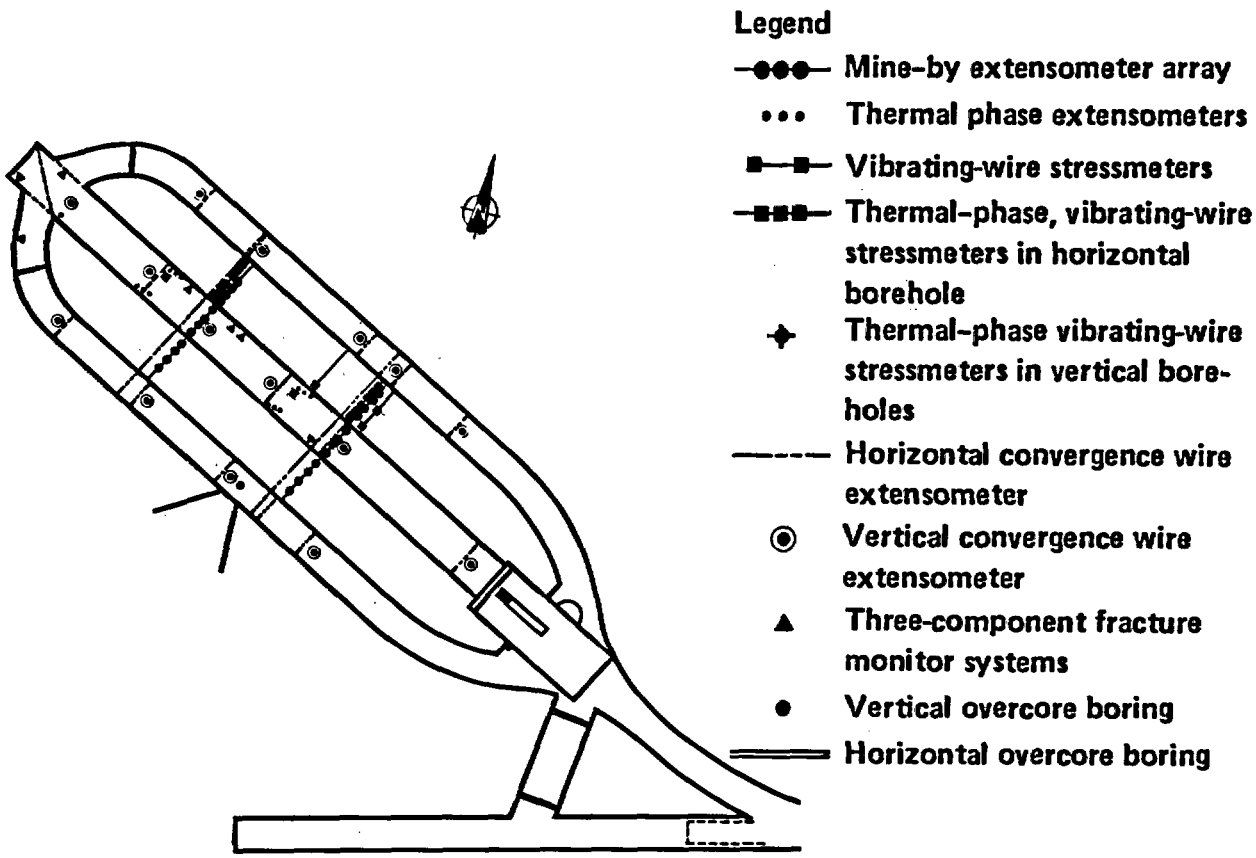

Figure 5. Plan view of displacement and stress instrumentation at Spent Fuel Test--Climax.

Failures of stressmeters and many near-field rod extensometer transducers early in the test necessitated replacement of these devices (Patrick, Carlson, and Rector, 1981).

2.4 SPENT-FUEL HANDLING SYSTEM

A spent-fuel handling system was designed and fabricated to facilitate transport of the fuel assemblies from the EMAD facility in Area 25, Nevada Test Site (NTS), to storage 420 m below surface at the SFT-C in Area 15, NTS (Duncan, House, and Wright, 1980).

The spent-fuel assemblies were shipped to NTS from the Turkey Point commercial pressured-water power reactor in Florida in an NRC/DOT licensed tractor-trailer transporter. The fuel assemblies were encapsulated in

stainless steel canisters in the shielded highbay of the EMAD facility and temporarily placed in storage pending transport to the SFT-C.

Transport over the 75 km of paved roads from EMAD to the SFT-C is accomplished with a semitrailer on which is mounted a 40-tonne shielding cask which was designed to carry canistered fuel assemblies which were too large in diameter for the licensed tractor-trailer transporter. This vehicle is called the surface transport vehicle (STV). The canister lowering system (CLS), which lowers the encapsulated spent fuel to the test level, consists of a hoist, headframe, control system, and a combination grapple/emergency braking system. The spent fuel is received on the test level by a rail-mounted underground transfer vehicle (UTV) which includes a 40-tonne shielding cask and a jib crane used in handling the fuel canisters and floor plugs. The UTV moves the fuel assembly between the access shaft and the canister emplacement holes in which the assemblies are temporarily stored during the test.

CHAPTER 3

TEST OBJECTIVES AND STATUS

Several objectives were defined to provide focus for research at the SFT-C. These were initially presented in the technical concept document for the test (Ramspott et al., 1979). They are reiterated here and are discussed in terms of progress to date.

3.1 STORAGE-PHASE TEST OBJECTIVES AND STATUS

The overall objective of the SFT-C is to evaluate the feasibility of safe and reliable short-term storage of spent reactor fuel assemblies at a plausible repository depth in a typical granitic rock, and to retrieve the fuel afterwards.

Where consistent with the above objective, a secondary objective is to obtain technical data to address two subjects: (1) the ultimate qualification of granite as a medium for deep geologic disposal of high level reactor waste, and (2) the design of a repository in granite.

The test has two main technical objectives:

- To simulate the effects of thousands of canisters of nuclear waste emplaced in geologic media, using only a small number of spent-fuel assemblies and electrical heaters.
- To evaluate the difference, if any, between the effect of an actual radioactive waste source and an electrical simulator on the test environment.

There are also some secondary technical objectives:

- To compare the magnitude of displacement and stress effects from mining alone with that of thermally induced displacements and stresses that occur after the spent fuel is introduced.
- To document quantitatively the amount of heat (about one-third, according to calculations) removed by mine ventilation.
- To compare the response to thermal load of relatively sheared or fractured rock and less fractured rock.
- To evaluate the performance of various backfill materials (not funded to date).
- To evaluate the performance of geotechnical instrumentation in a simulated repository environment (added in 1981).

The progress toward achieving each of these objectives is shown in Table 1.

Six design objectives were developed which addressed (1) the number of spent fuel and other thermal sources, (2) the test layout, (3) achievement of maximum temperatures in the test array, (4) development of an instrumentation plan, (5) development of a data acquisition system, and (6) design of a spent-fuel handling system. The status of these objectives is shown in Table 2.

3.2 POST-STORAGE-PHASE TEST OBJECTIVES

In addition to the previously identified objectives, several additional objectives will be pursued during the period following removal of spent fuel from the SFT-C. These focus on (1) filling gaps in the existing data base which is used for thermal and thermomechanical response calculations and (2) improving the quality of interpretation of acquired data. The additional objectives are:

- To determine the in situ state of stress in the vicinity of the SFT-C in its heated state.
- To determine the in situ elastic properties in the vicinity of the SFT-C in its heated state.
- To determine the response of the field-emplaced vibrating-wire stressmeters to changes in stress.
- To determine the corrosion and radiation effects produced by the simulated repository environment on metallic components.

Technical issues associated with (1) these new objectives and (2) those previously defined in Table 1 are presented in Chapter 4.

Table 1. Status of general and technical objectives of the SFT-C.

	Objective	Status	Documentation/Comments
1.	Demonstrate feasibility of storage concept	Complete except retrieval	11 assemblies emplaced and 3 successful exchanges
2.	Simulate effects of large array of nuclear waste canisters	Complete except cool-down	Carlson et al. (1980) and Patrick et al. (1982)
3.	Evaluate differences between spent fuel and electrical simulators	No difference in bulk thermal properties; requires post-test core analysis to provide quantitative assessment.	Patrick et al. (1982)
4.	Compare mining-induced and thermally-induced displacements and stresses	Complete except cool-down	Yow and Butkovich (1982), Heuze et al. (1981a), Butkovich, Yow, and Montan (1982)
5.	Document heat removal by ventilation	Complete	Patrick et al. (1982)
6.	Compare response of sheared and unsheared zones to thermal loads	Incomplete	Early-time instrument failures resulted in loss of critical data; must monitor cool-down response to meet objective
7.	Evaluate performance of backfill materials	Deleted from objectives list	This phase of the project was not funded
8.	Evaluate performance of geotechnical instrumentation	Incomplete	Patrick, Carlson, and Rector (1981); requires additional evaluation period for new instruments and post-test calibrations

Table 2. Status of SFT-C design objectives.

Objective	Status	Documentation/Comments
1. Select proper number of spent fuel and other thermal sources	Complete	Ramspott et al. (1979)
2. Establish test layout	Complete	Patrick and Mayr (1981)
3. Achieve maximum repository temperatures	Complete for spent-fuel wasteform	Ramspott, Ballou, and Patrick (1981)
4. Develop instrumentation system	Complete and operational	Brough and Patrick (1982); Quam and Devore, (1981); Majer, McEvilley, and King (1981)
5. Design data acquisition system	Complete and operational	Nyholm, Brough, and Rector (1982)
6. Design and fabricate a spent-fuel handling system	Complete and operational	Duncan, House, and Wright (1980)

CHAPTER 4

TECHNICAL ISSUES

Five broad technical issues have been identified that will be addressed in meeting the test objectives discussed in Chapter 3. These technical issues are discussed briefly here.

4.1 THERMAL AND THERMOMECHANICAL RESPONSES

The thermal and thermomechanical responses of the SFT-C have been calculated and measured since the test was first conceived. Early scoping calculations were employed in developing the test concept and instrumentation plan (Ramspott et al., 1979).

Scoping calculations of excavation response using an elastic model in the ADINA finite element code (Butkovich, 1981a) and subsequent calculations using a discrete joint model in a finite element code (Heuze, Butkovich, and Peterson, 1981a) showed poor agreement between measured and calculated rock response. However, measured and calculated displacements occurring during the fuel-storage phase of the experiment have been in good agreement using a thermoelastic model in ADINA (Butkovich, Yow, and Montan, 1982). Thus it appears that the thermal response of the rock mass is much less affected by geologic structure during heating than it is during excavation.

Agreement between measured and calculated temperatures has been very good during the fuel-storage phase (Patrick et al., 1981; Montan and Patrick, 1981). The only aspect of this calculation that has been found to be inadequate is modeling of heat removal by the ventilation system.

It is important to calculate and to measure the post-retrieval thermal and thermomechanical response of the SFT-C to cooling. Response during this period has implications regarding structural stability (such as would occur during waste retrieval from a repository of the future) and fracture formation and concomitant permeability increases (such as would occur during the normal long-term cooling of a repository of the future). These issues are readily addressed at the SFT-C.

4.2 THERMAL AND THERMOMECHANICAL PROPERTIES

Imperfect knowledge of the thermal and thermomechanical properties that were utilized in the design and as-built calculations referenced above contributes to the observed errors. Additional sources of error include the in situ state of stress and the thermal output of the spent-fuel canisters.

Several tasks are justified in the examination of potential sources of differences between calculations and measurement, since the work contributes not only to improved understanding of the SFT-C but also to the validation of several computer codes and models employed in waste isolation investigations. First, it is important to measure the in situ modulus of the stock in its elevated-temperature state to augment previous ambient-temperature measurements (Heuze et al., 1981b). Second, thermal data obtained during the test can be used to infer more exact thermal properties. Third, the in situ state of stress at the SFT-C has often been questioned, because of both the sparseness of data and observed variations in the data (Ellis and Magner, 1982). Although a large rock mass has been affected by the energy dissipated by spent fuel and electrical thermal sources, it is possible to obtain stress determinations in a region that has not been significantly affected. In addition, it should be possible, knowing both the near-field and far-field states of stress, to address quantitatively the hypothesized formation of stress "arching" around the openings (Wilder and Patrick, 1980). Fourth, both temperature and radiation measurements indicate that the output of heat and ionizing radiation may be somewhat different from that calculated. Calorimetry of at least one fuel assembly at the end of the storage phase would verify and quantify these differences.

4.3 RADIATION AND THERMAL EFFECTS ON GEOLOGIC MATERIALS

One of two main technical objectives of the test is to determine the relative effects on the granite of heat alone versus heat plus ionizing radiation. Pre-test record cores were obtained prior to drilling the canister emplacement holes. After removal of the spent fuel and electrical simulators, sidewall samples will be obtained to permit comparisons of effects seen at the 11 locations where the rock was subjected to heat and ionizing radiation and at the 6 locations where the rock was subjected to heat alone. Determinations

of thermal and mechanical properties, alteration mineralogy, and microfracture density will provide adequate data to compare these effects.

4.4 CORROSION AND RADIATION EFFECTS ON METALLIC COMPONENTS

Several types of metals, including carbon steel, galvanized sheet steel, and 304L stainless steel, have been subjected to various conditions of contact with groundwater, elevated temperature, and exposure to beta, gamma, and neutron irradiation. The effects of these test conditions on the metals used at the SFT-C provide field data pertinent to waste package design. Analyses of metallurgy, corrosion damage, corrosion products, and neutron activation will be used to identify and quantify these effects.

4.5 INSTRUMENTATION RELIABILITY

Failure of a significant number of stress and displacement instruments at the SFT-C led to adoption of instrumentation evaluation as an additional test objective (Patrick, Carlson, and Rector, 1981). A subsequent LLNL-sponsored National Waste Terminal Storage Program (NWTS) meeting revealed that problems with geotechnical instrumentation are widespread (Wilder et al., 1982). It is in the best interest of both the SFT-C and the broader NWTS program to complete the analyses now underway and to perform post-test calibrations of a statistically significant number of all instruments in use at the SFT-C.

CHAPTER 5

THERMAL CALCULATIONS FOR TEST COMPLETION

A series of thermal calculations have been performed using the *TRUMP* (Edwards, 1972) finite difference heat flow code to determine a reasonable duration for the cool-down period following spent-fuel retrieval.

5.1 CALCULATIONAL GEOMETRY

The calculational geometry selected for the post-retrieval response studies is the same as that used in the as-built calculations (Montan and Patrick, 1981). A unit cell was formed by considering the symmetry of the test array. This cell contains one canister and is bounded by two parallel vertical planes perpendicular to the drifts and spaced halfway between canisters. The four-fold axis of symmetry at the canister centerline provides two additional vertical planes, thus reducing the required calculational mesh to one-fourth of the unit cell.

Three basic regions are used in the calculations (Fig. 6). The innermost region (Region III) is 20 m wide by 40 m high and is divided into 1600 zones (0.5 × 1.0 m). The canister and nearby rock are modeled explicitly in three dimensions while the remainder of the mesh is two-dimensional. Region II contains 96 zones (5 × 5 m), and Region I contains 24 zones (20 × 20 m), giving an overall size of 80 × 160 m with a time constant of ~120 years.

5.2 MATERIAL PROPERTIES AND THERMAL SOURCE CHARACTERISTICS

The material properties used in these calculations are the same as those used in the as-built calculations (Table 3).

In light of slight disagreements between measured and calculated temperatures observed during the first 2 years of heating, we examined the effect of varying the conductivity and diffusivity of the rock in two ways. First, diffusivity was varied over a range of 35-45 m^2/yr with conductivity held constant at 3.11 W/m•K. Second, conductivity was treated (1) as constant with temperature, (2) as increasing ~12% over the temperature range from 23 to 200°C, and (3) as decreasing ~12% over the temperature range from 23 to 200°C. Because none of these variations produced discernibly better

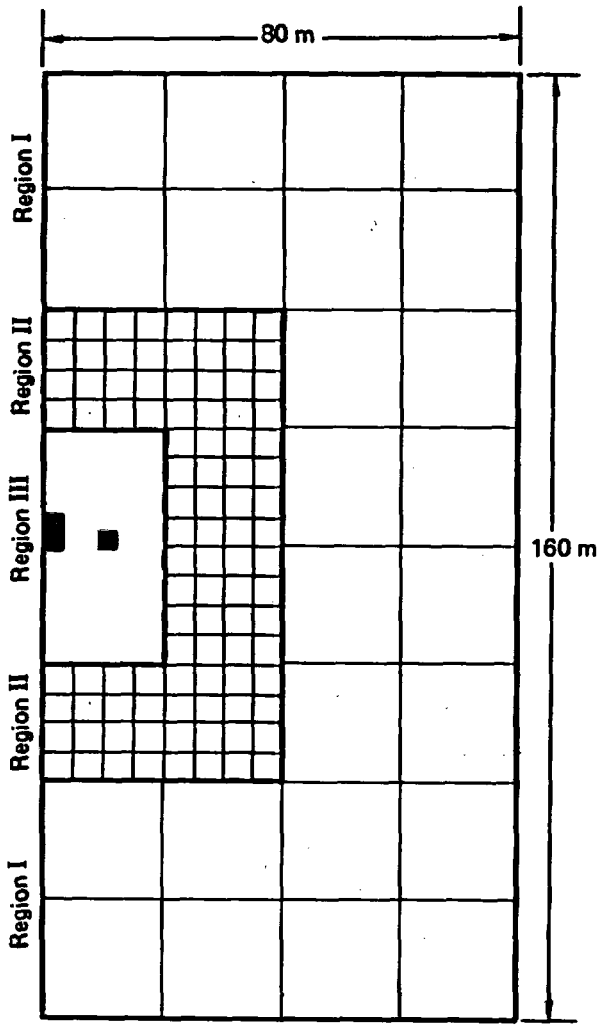

Figure 6. Three-region mesh configuration for TRUMP thermal calculations.

Table 3. Summary of thermal properties used in SFT-C as-built calculations.

Component material	Conductivity, W/m•K	Density, Mg/m^3	Heat capacity, J/kg•K	Emmittance
Rock	3.11	2650	930	0.8
Air	0.03	1	1000	--
Canister (stainless steel)	--	--	--	0.4
Hole liner (mild steel)	--	--	--	0.8
Zircalloy cladding[a]	--	--	--	0.4
Helium filling[a]	$4 \times 10^{-4}/T$[b]	--	--	--

[a] Used in fuel temperature calculations.
[b] T = absolute temperature in degrees Kelvin.

agreement between measurements and calculations, the as-built properties were used.

Thermal output from the spent fuel and electrical simulators was treated as in the as-built calculations (Fig. 7). These sources are treated as instantaneously ceasing to generate heat at a fuel age of 5.5 years out of core (3.0 years of storage). This simulates the removal of the spent fuel and electrical heaters over a time period of approximately 6 weeks. Guard heaters are treated in the same manner and follow their actual power schedule up to 5.5 years out of core (Table 4).

A partial flow model is used to treat the effects of ventilation (Montan and Patrick, 1981). To obtain maximum cooling effects, we elected to direct the full flow of the two storage-phase fans in series through the canister

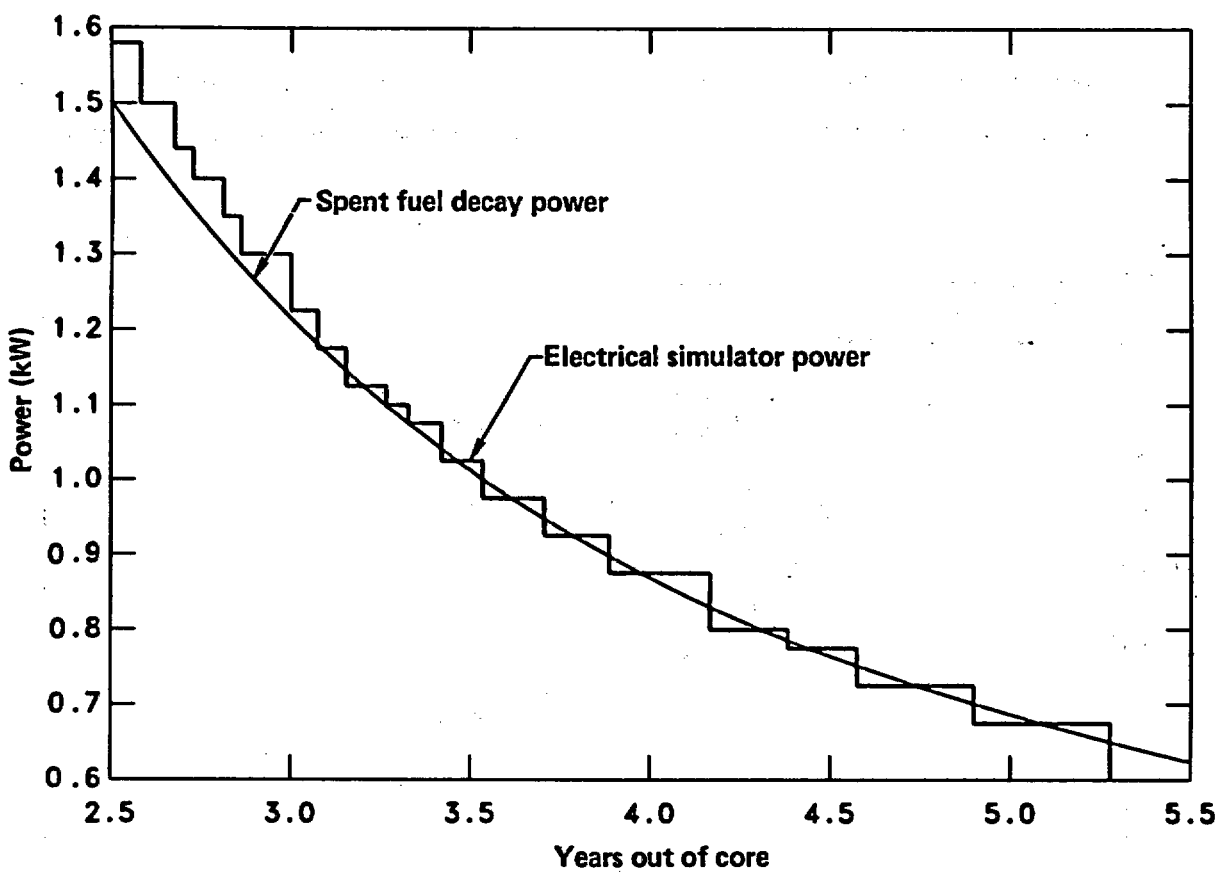

Figure 7. Spent fuel power decay curve and electrical simulator power history.

Table 4. Power levels for 20 guard heaters in SFT-C north and south heater drifts.

Date	Time out of core, yr	Power level, W
June 27, 1980	2.60	1850
July 2, 1980	2.62	925
December 16, 1980	3.07	1250
March 9, 1982	4.30	1350

drift and to partition the flow of the Sutorbilt blower to the two heater drifts. In this manner, equal flow rates 2.83 m^3/s (6000 cfm) are maintained in each drift.

5.3 RESULTS

As shown in Fig. 8, temperatures near the thermal sources will drop very quickly. Temperature decreases during the first 6 months after retrieval will

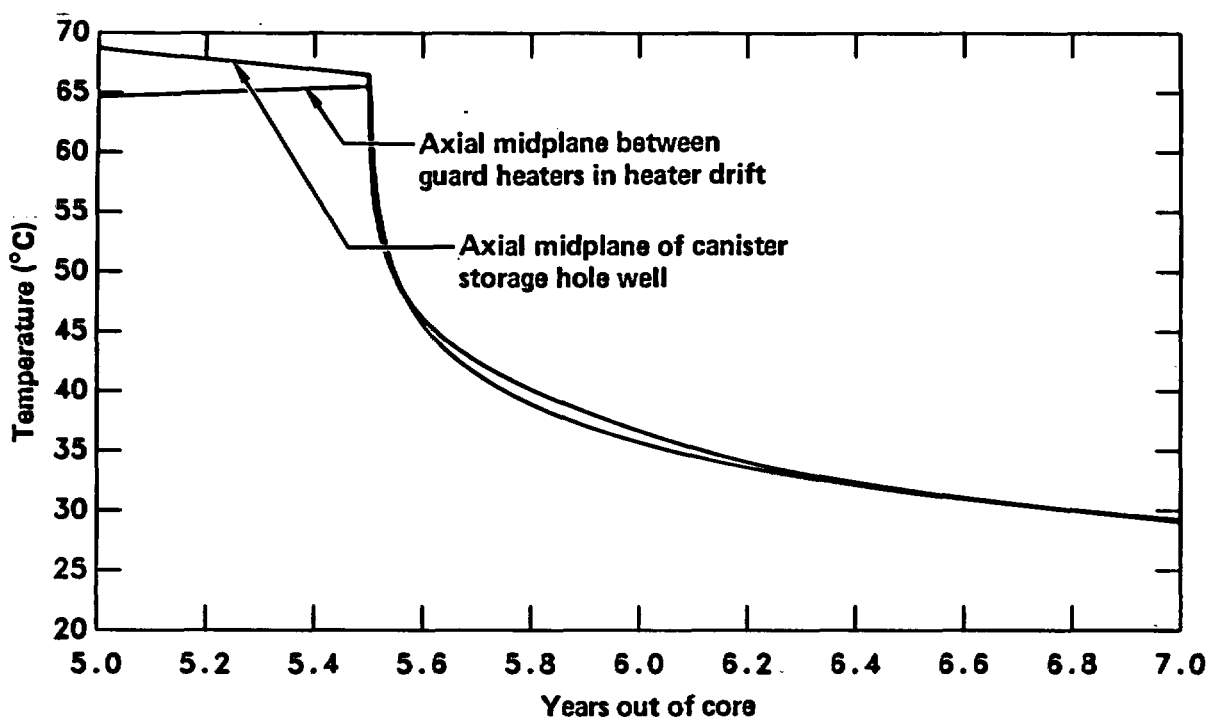

Figure 8. Temperature histories near thermal sources resulting from fuel retrieval.

amount to about 30°C at these locations. An additional full year of cooling would produce only 5 to 7°C additional change. Another way of treating the data is to consider that about 70% of all the temperature change that will ever occur (in returning to ambient temperature) will occur within the first 6 months.

Temperature changes observed farther away from the thermal sources are much smaller, as expected. Figure 9 displays the temperature histories of points 10 m below the floor of the canister drift and midway in the pillar between drifts. Temperature changes in the first 6 months are 4 to 5°C and represent only 20 to 40% of the existing temperature differential with respect to ambient. Points farther out in the array would have immeasurably small temperature changes during the initial 1 to 2 years of post-retrieval cooling.

The overall thermal response of the SFT-C to spent-fuel retrieval is best displayed as two-dimensional contours of temperature at selected times. Figures 10 through 14 provide calculational results at times immediately preceding retrieval (5.5 years out of core), and 0.1, 0.5, 1.0, and 1.5 years after retrieval, respectively. The solid contours are in 10°C intervals with dotted contours at 2°C intervals. The first (outer) solid contour is at

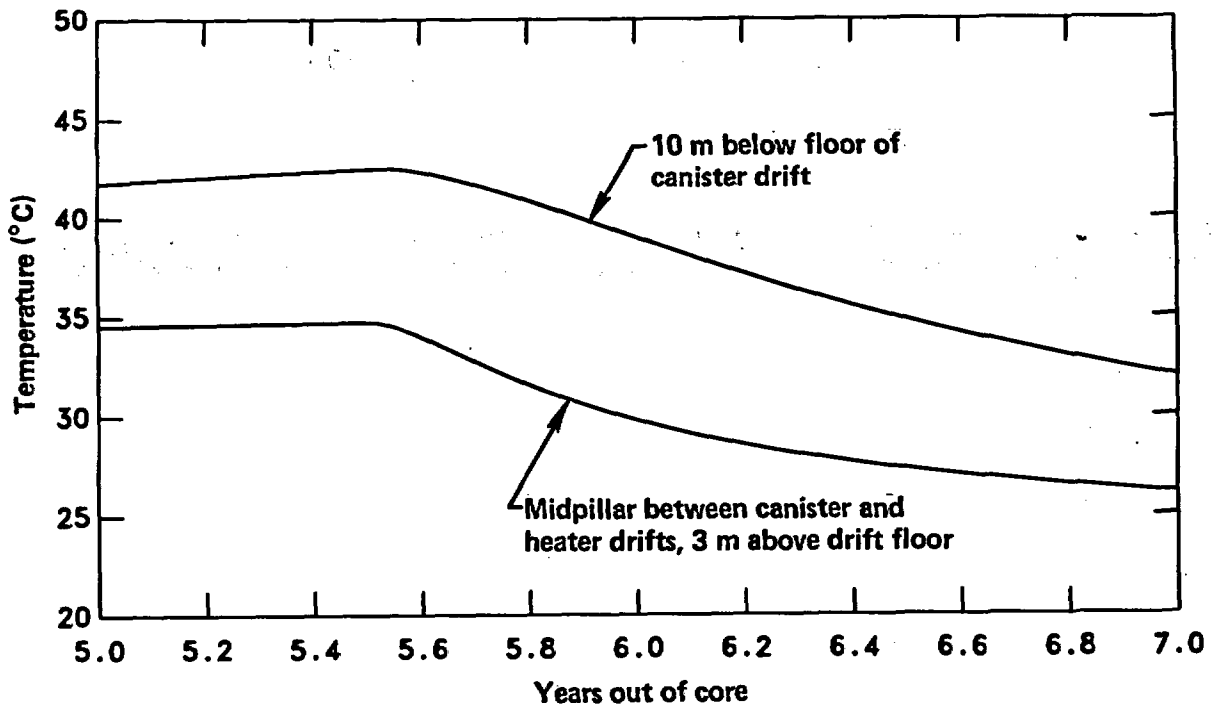

Figure 9. Temperature histories at intermediate locations resulting from fuel retrieval.

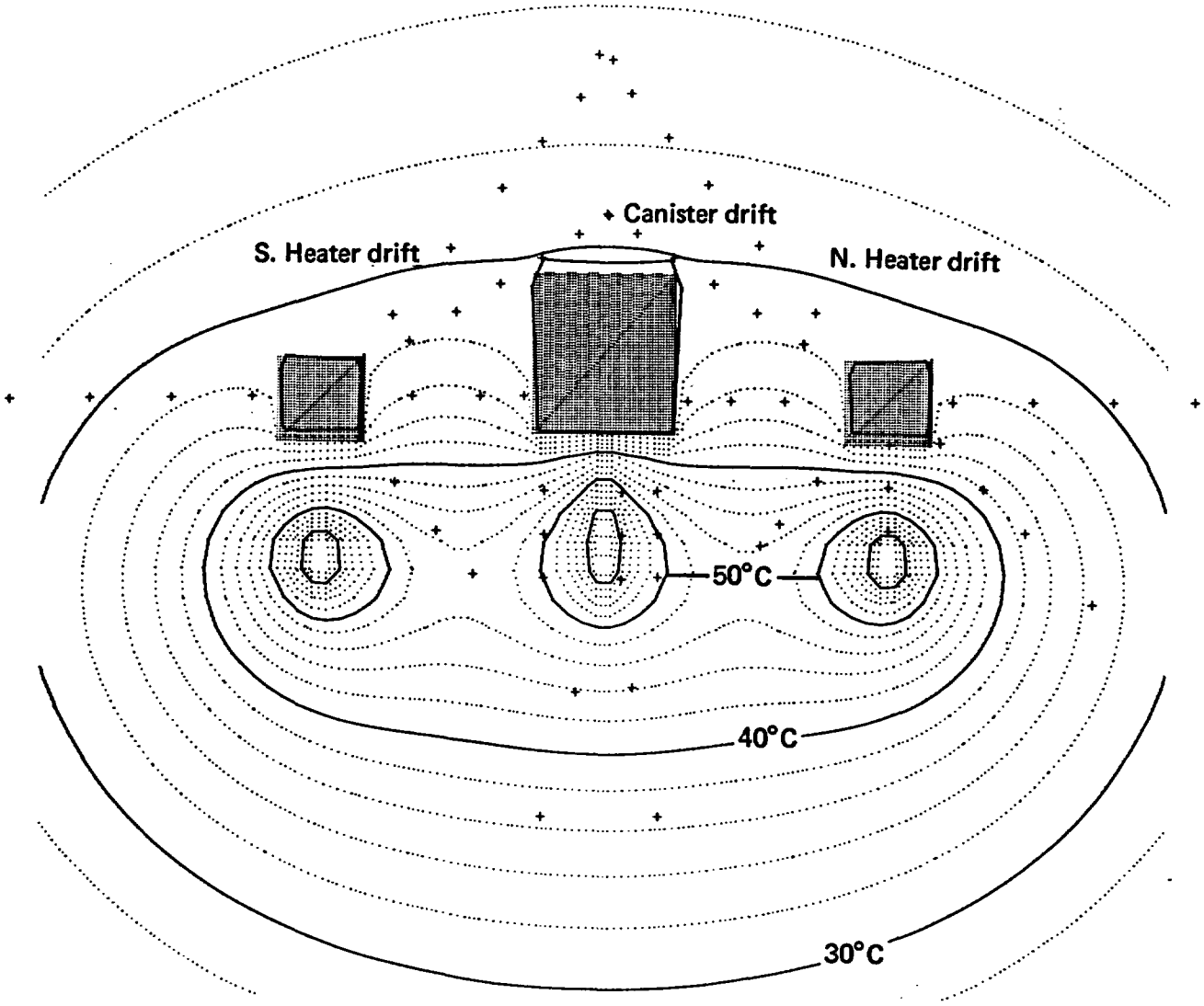

Figure 10. Contours of calculated temperatures at a fuel age of 5.5 years out of core, prior to spent-fuel retrieval (+ denotes thermocouple location).

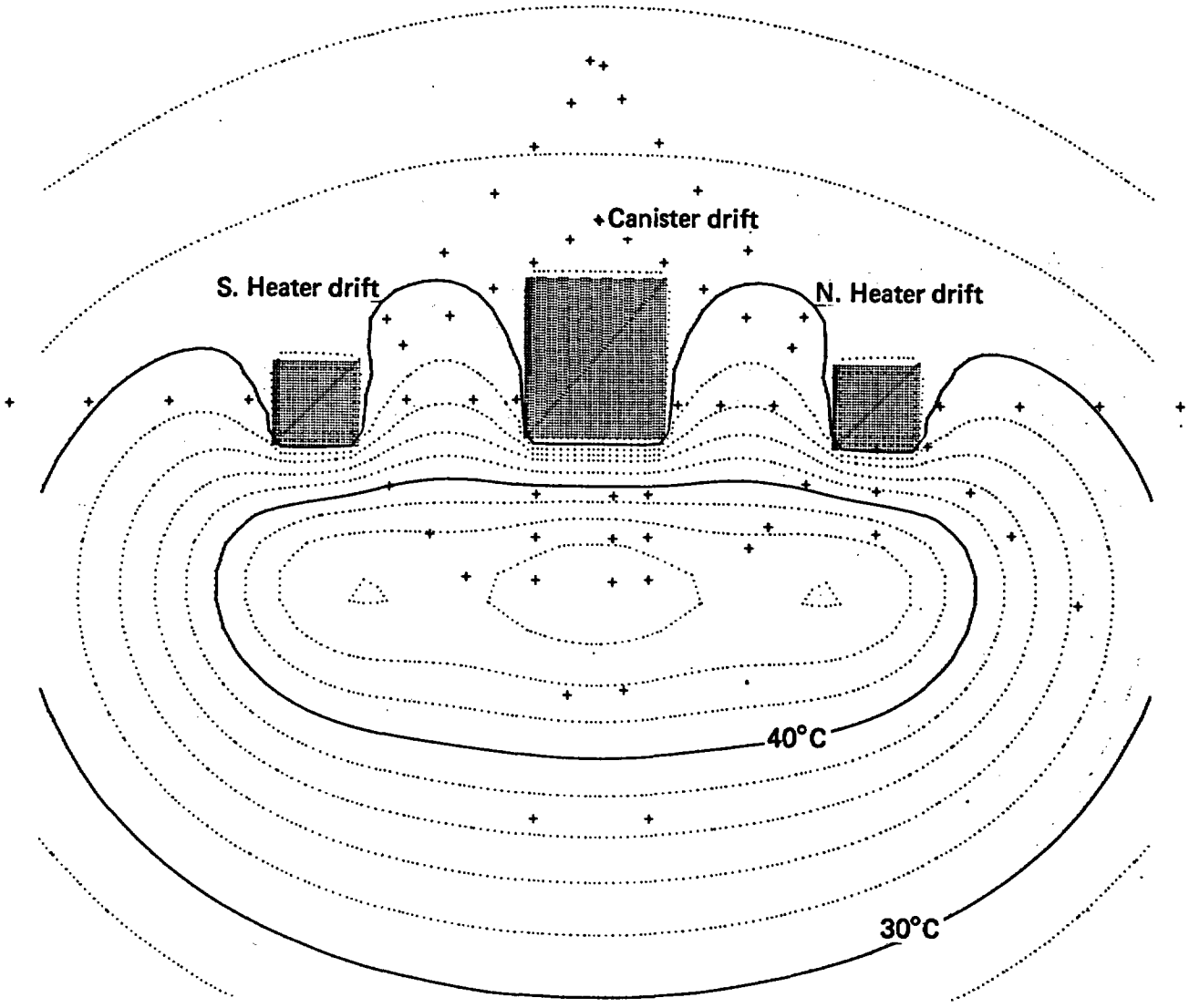

Figure 11. Contours of calculated temperatures at a fuel age of 5.6 years out of core, 0.1 year after spent-fuel retrieval (+ denotes thermocouple location.

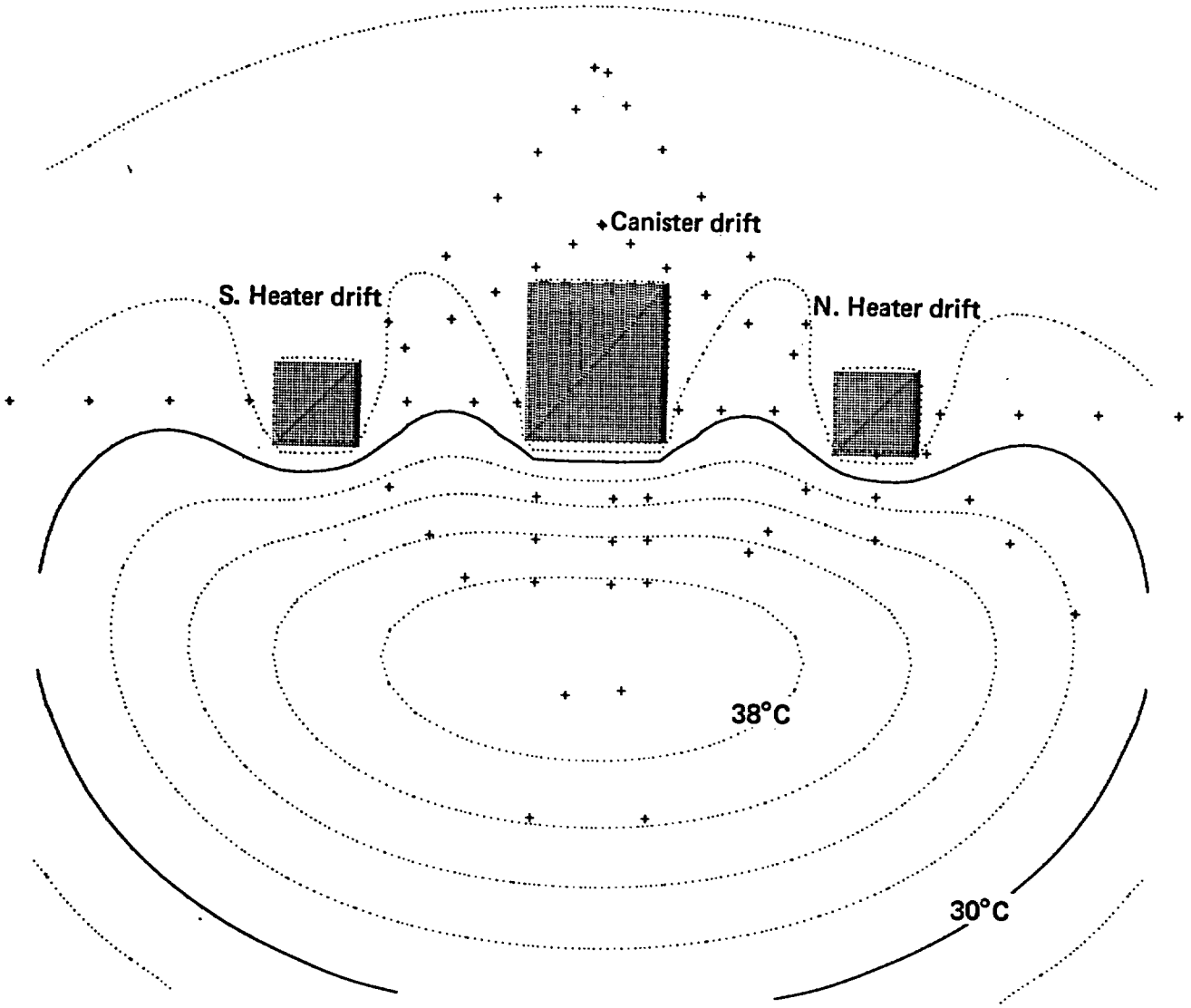

Figure 12. Contours of calculated temperatures at a fuel age of 6.0 years out of core, 0.5 year after spent-fuel retrieval (+ denotes thermocouple location).

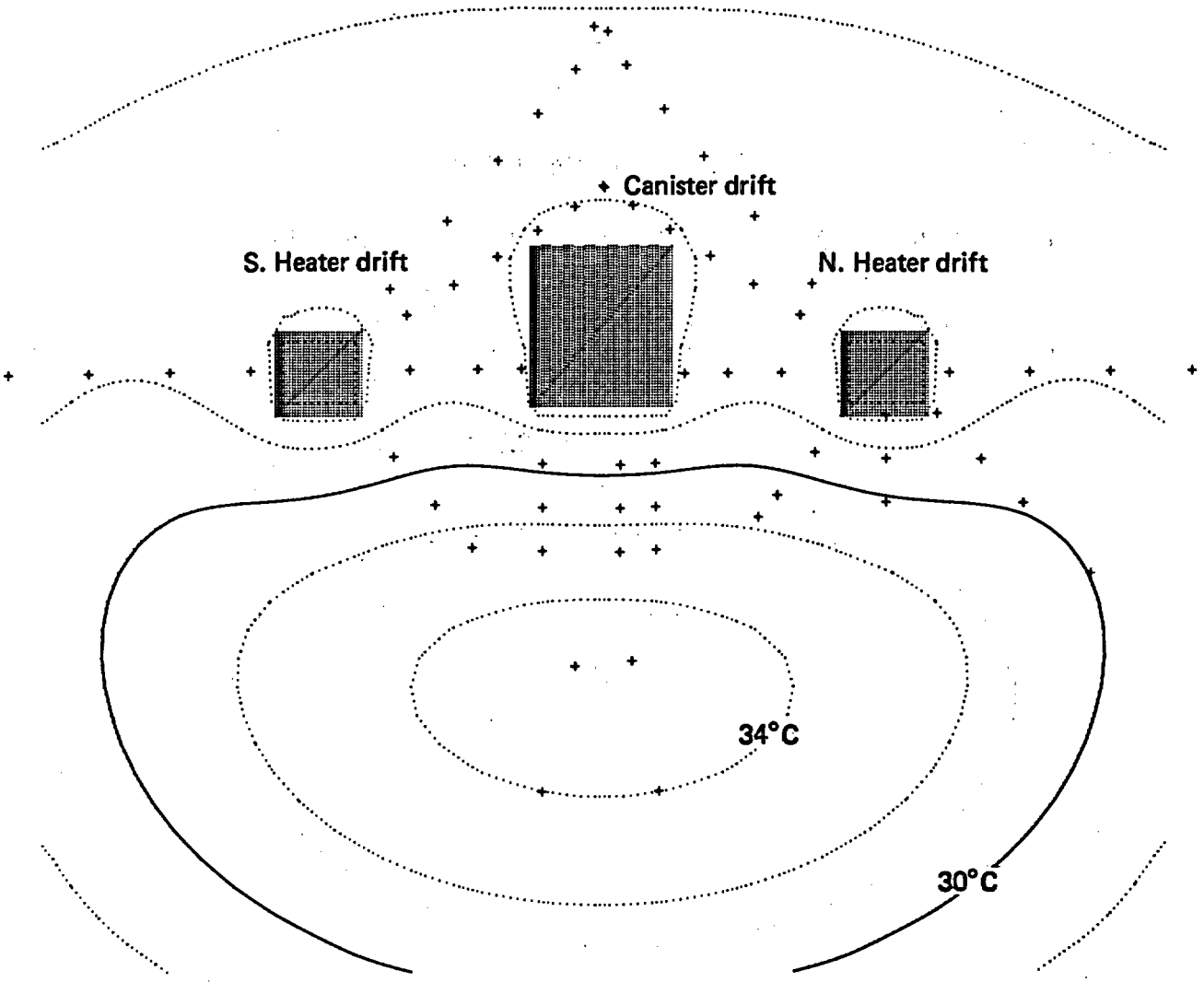

Figure 13. Contours of calculated temperatures at a fuel age of 6.5 years out of core, 1.0 year after spent-fuel retrieval (+ denotes thermocouple location).

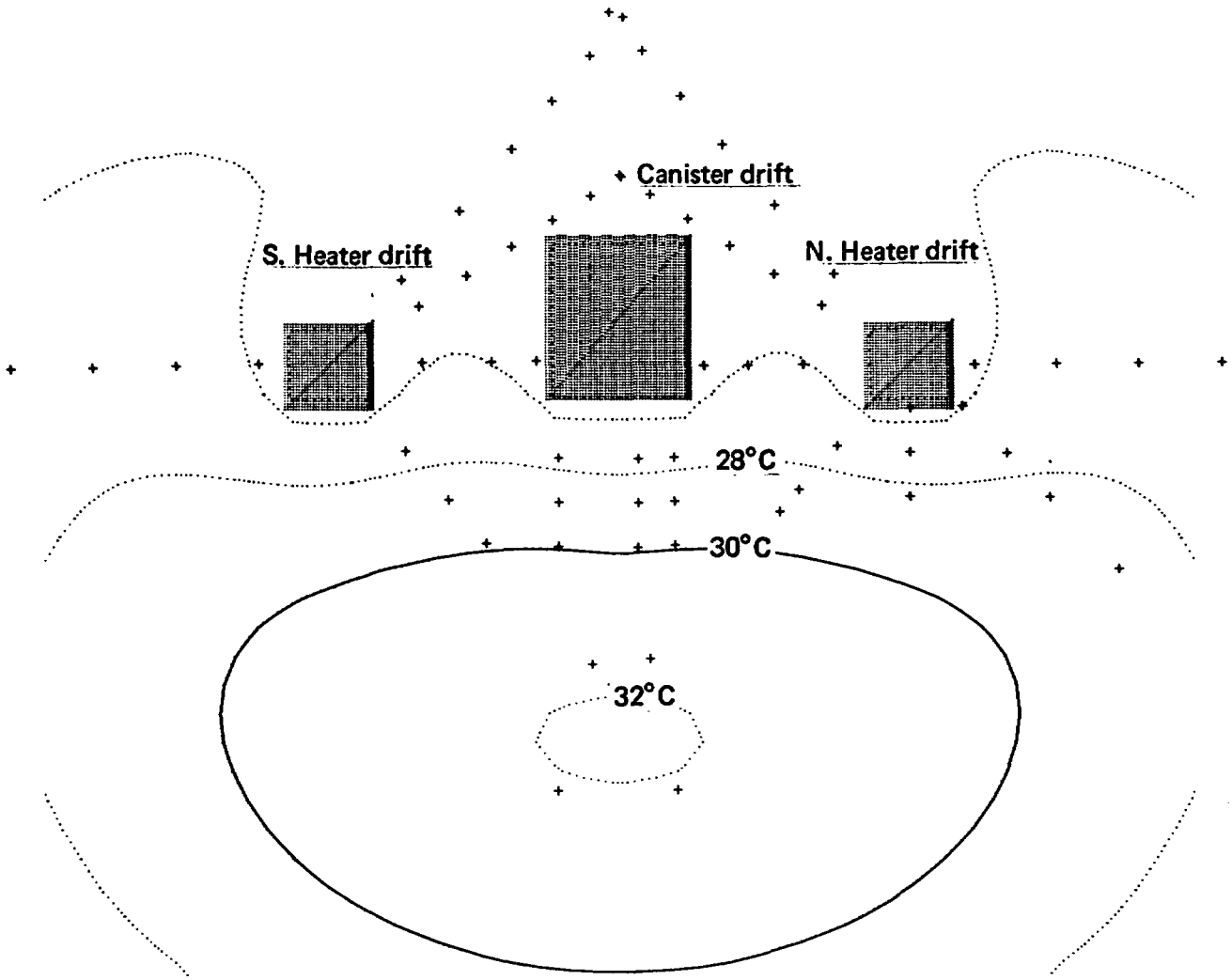

Figure 14. Contours of calculated temperatures at a fuel age of 7.0 years out of core, 1.5 years after spent-fuel retrieval (+ denotes thermocouple location).

30°C. Notice again that although temperatures continue to change, the major near-field effects are seen within the first 6 months after retrieval.

5.4 CONCLUSIONS

The thermal response calculations indicate that ~70% of all temperature change near the thermal sources will occur within 6 months after fuel retrieval. The cooling effects become increasingly smaller at increasing distances from the source. The calculations indicate that unreasonably long periods of monitoring (several years) would be required to measure significant changes in temperature at these locations.

CHAPTER 6

THERMOMECHANICAL CALCULATIONS FOR TEST COMPLETION

Thermomechanical calculations were also performed to determine the time-varying displacements and stress changes that will accompany the retrieval of the spent fuel and de-energizing of the electrical heat sources. These calculations were performed using ADINA and the compatible ADINAT heat-flow codes (Bathe, 1977 and 1978).

6.1 CALCULATIONAL GEOMETRY

The calculational geometry is the same as was used in the as-built calculations (Butkovich, 1981b). The region modeled is 100 m high by 100 m wide (Fig. 15). Notice that due to symmetry only one half of the cross section is modeled. Vertical planes of symmetry also are imposed at locations midway between canisters and through the center of the unit cell canister because of previously described geometrical symmetry.

6.2 MATERIAL PROPERTIES AND SOURCE CHARACTERISTICS

The material properties used are shown in Table 5. Ventilation and radiative heat transfer effects are approximated by the presence of drift materials possessing appropriate "effective" conduction and convection properties (Butkovich and Montan, 1980). These properties are shown in Table 6.

Boundary stresses on the mesh are gravitational in the vertical direction and 1.2 times gravitational in the horizontal direction, in accordance with stress measurements obtained at the site (Ellis and Magner, 1982).

The mesh used for the ADINAT calculation is the same as for the ADINA calculation. A constant-temperature thermal boundary condition was imposed. Thermal sources (spent fuel, electrical simulators, and guard heaters) are as described in Chapter 5.

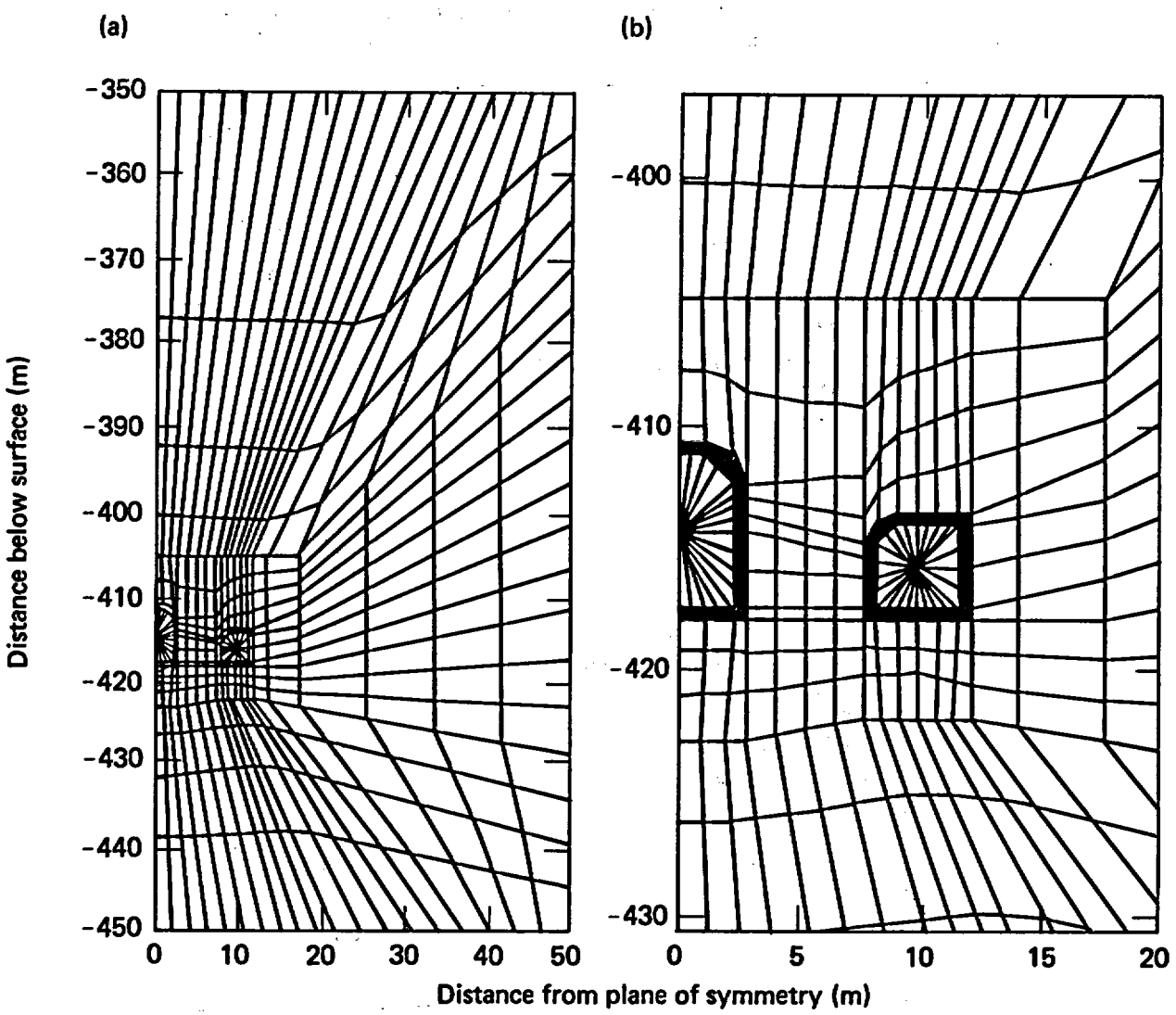

Figure 15. Finite element mesh configuration for ADINA and ADINAT calculations.

Table 5. Values of Climax Stock granite and air properties used in calculations.

A. Climax Stock granite	Values
Heat capacity[a]	930 J/kg•K
Thermal conductivity:	
0°C	3.1679 W/m•K
23°C	3.1104 W/m•K
477°C	2.1104 W/m•K
Thermal expansion coefficient:	
0°C	10×10^{-6} K^{-1}
23°C	10×10^{-6} K^{-1}
40	8.9×10^{-6} K^{-1}
80	7.4×10^{-6} K^{-1}
125	8.0×10^{-6} K^{-1}
175	9.6×10^{-6} K^{-1}
225	12.7×10^{-6} K^{-1}
Elastic modulus:	
Field	
Explosive-damaged region	13 GPa
Rock mass	27 GPa
Laboratory	
Rock samples	48 GPa
Poisson's ratio:	
Field	
Rock mass	0.25
Damaged zone	0.35
Laboratory	
Rock samples	0.21

B. Air properties[b]	Values
Density	1 kg/m^3
Heat capacity	1000 J/kg•K
Thermal conductivity	0.03 W/m•K

[a] Derived from diffusivity measurements.
[b] Used to derive input values shown in Table 6 (Butkovich and Montan, 1980).

Table 6. Values of drift material properties derived to simulate radiation and ventilation with ADINAT.

Properties	Values
Thermal conductivity:	
Spent-fuel drift	70 W/m•K
Heater drift	40 W/m•K
Volumetric heat capacity	8×10^4 J/m^3•K
Convection coefficient (H)	
ΔT (K)	H(W/m^2•K)
0	0
0.272	4.5
0.445	5.0
0.903	5.5
1.878	6.0
4.074	6.5
9.427	7.0
24.042	7.5

6.3 RESULTS

The thermomechanical response of the SFT-C following spent-fuel retrieval mirrors the thermal response. Stress changes (Fig. 16) and displacements (Fig. 17) are most pronounced and rapid at locations close to the thermal sources.

The stress changes calculated are vertical stress 1 m into the pillar from the canister drift (A in Fig. 16), vertical stress at midpillar (B in Fig. 16), and horizontal stress at the axial midplane 1 m from the canister emplacement hole centerline (C in Fig. 16). About 50% of the stress change occurring in 1.5 years following retrieval has occurred during the first 0.5 year at positions in the pillar. About 70% of the 1.5-year total has occurred

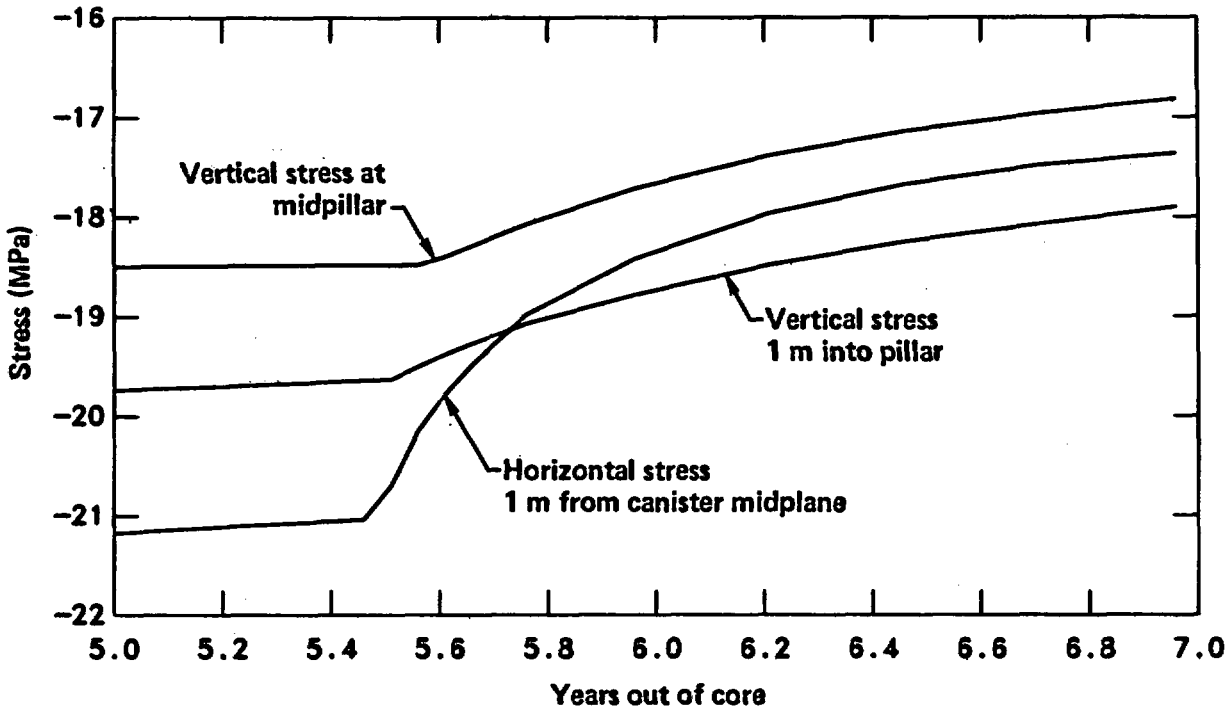

Figure 16. Stress changes resulting from fuel retrieval at selected locations.

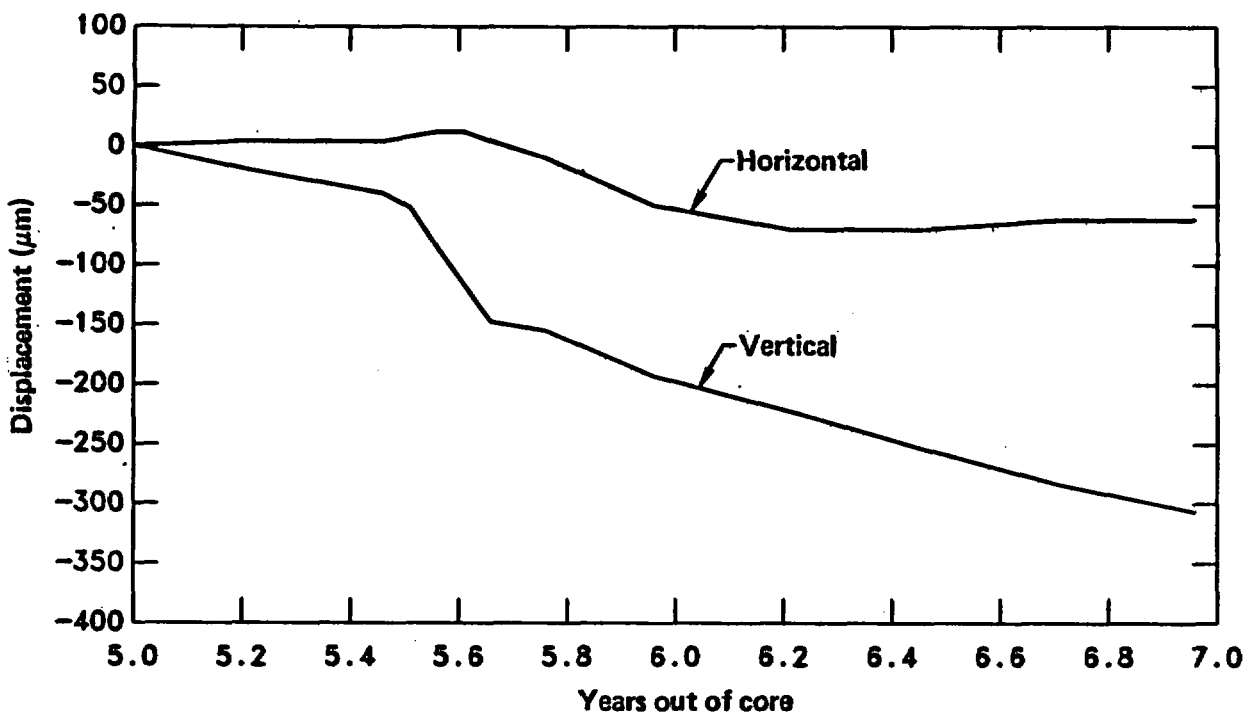

Figure 17. Displacements across canister drift due to fuel retrieval (plus values of displacement denote closure).

at a position 1 m from the canister during the first 0.5 year. It is also interesting to note that the time rate of stress change is essentially identical at the three selected positions after about 0.7 year post-retrieval. Also note that all changes are small: a few MPa.

Displacements tell a similar story. In Fig. 17 we examine vertical and horizontal closures in the canister drift. About 75% of the horizontal and 60% of the vertical closure that would occur in 1.5 years has occurred in the initial 0.5 year post-retrieval. In fact, the horizontal displacement passes through a minimum between 6.0 and 7.0 years out-of-core. Once again the measured effects are small: a few tenths of millimetres.

6.4 CONCLUSIONS

The thermomechanical calculations show that 50 to 70% of stress changes and displacement that would occur during 1.5 years of post-retrieval monitoring have occurred in the initial 6 months. Total changes in stresses and displacements are calculated to be small, but measurable, during the post-retrieval period. The rates of change are also small and continue to decrease with time. Thus very long monitoring times are required to measure significantly larger stress changes and displacements.

CHAPTER 7

TEST COMPLETION WORK ELEMENTS

Nine work elements have been identified that will meet the objectives presented in Chapter 3. These elements constitute the current plan for completing the Spent Fuel Test--Climax in accordance with the identified objectives and existing DOE guidance.

7.1 SPENT-FUEL RETRIEVAL

Purpose: Retrieval of the spent fuel is the initiating activity for test completion. It also is the work element that addresses the overall objective of the SFT-C (Section 3.1).

Plans: Spent-fuel retrieval will be accomplished in accordance with established LLNL Technical Operating Procedures which have been used during emplacement and exchange operations. Electrical simulators will also be removed during this period. Support requirements from all organizations will be about the same as utilized during previous fuel handling operations.

7.2 REMOVAL OF STORAGE HOLE LINERS

Purpose: Removal of the storage hole liners is required to accomplish parts of work elements in Sections 7.4 and 7.5. It would also be required in order to use the emplacement holes for possible barrier or backfill tests (Chapter 8).

Plans: Removal of storage hole liners will be accomplished during the same time frame as retrieval of spent fuel and removal of electrical simulators. Since liner removal will take place sequentially with retrieval, little if any additional support should be required. Removal of the liners will be accomplished with the crane on the UTV. Assistance, if necessary, will be provided by an existing canister puller which is currently available at the site.

7.3 GEOLOGIC CHARACTERIZATION

Purpose: Additional geologic characterization is required to fully define input parameters for analysis of test results by computer modeling.

Data are currently available for in situ state of stress and rock elastic properties at ambient rock temperatures. Laboratory data are available at both ambient and elevated temperatures for rock elastic properties. No data are available for either in situ state of stress or rock elastic properties at elevated temperatures. Such data will serve two valuable functions: (1) to provide field rock mass properties for input to computer modeling, and (2) to provide a unique* cross-check of laboratory versus field measurements at various temperatures for rock elastic properties.

Plans: Geologic characterization will include in situ stress and modulus measurements and core logging. These measurements will be performed by LLNL and its subcontractors.

In situ stress measurements are anticipated to utilize an overcoring technique. Two measurement locations drilled horizontally through each pillar (~5.5 m) and one location horizontally outward from each rib (~30 m) are planned. A 38-mm-diameter (EX) pilot hole will be drilled to total depth in each location and a 6-in. (150-mm) diameter overcore will be sequentially advanced with simultaneous strain-relief measurements. All holes will be perpendicular to the ribs and pillars. Survey confirmation of hole locations and orientations is required.

In situ modulus measurements will be made in existing NX boreholes in the pillar regions by LLNL personnel. No additional support is anticipated.

Core logging will be performed by LLNL personnel. Drilling inspection and survey control are required for the in situ stress boreholes and all sampling holes described below. All core will be boxed, labeled, and shipped to the U.S. Geological Survey (USGS) core library in Mercury, Nevada, for storage and subsequent analysis.

7.4 GEOLOGIC SAMPLING AND TESTING

Purpose: Geologic sampling will be performed at several locations within the test array to obtain test specimens which will be used in evaluating the effects of heat alone versus the effects of heat and ionizing radiation. This work element thus addresses one of the primary technical objectives of the test.

---

* Unique in the strict sense--no such data set is known to exist.

Plans: Samples will be obtained from two heater holes in both the north and south heater drifts by overcoring the existing holes with a 6-in. (150-mm) diameter core barrel. A pilot will be used to ensure concentricity of the core with the inner hole. These holes are ~17 ft (5.2 m) deep.

Photographic logs of each canister emplacement hole (CEH) will be made using a fish-eye lens. This work will be subsequent to liner removal and prior to drilling at these locations. The photographic technique will be similar to that used during construction and will utilize a color bar to permit accurate color balance of the logs.

Samples of rock and grout will be obtained by drilling one 6-in. (150-mm) diameter core hole at the perimeter of each CEH. The hole will be positioned adjacent to the pre-test canister core hole and will include the surface of the CEH perimeter. Inspection and survey control will be required. All core will be color-photographed.

7.5 METALLURGICAL SAMPLING AND TESTING

Purpose: There are few data available on the performance of metals in a natural environment in a radiation field. Although the SFT-C data are short-term, they will provide valuable field information in support of NWTS Waste Package design tasks (see Section 4.4).

Plans: Metallurgical sampling of selected components is planned. Samples of all canister emplacement hole liners and electrical simulator canisters will be obtained at Area 15. A band saw or similar device will be required to obtain the samples. Samples of spent fuel canisters will be obtained at Area 25, EMAD, by Westinghouse personnel.

Samples of smaller components such as heater elements and thermocouples will be obtained using hand tools.

7.6 THERMAL AND THERMOMECHANICAL RESPONSE MEASUREMENTS

Purpose: These measurements are the primary means of fulfilling many of the original test objectives (Chapter 3). See Section 4.1 for discussion of the technical issues.

Plans: The thermal and thermomechanical response of the SFT-C will continue to be monitored for 6 months following spent-fuel retrieval. The

existing instrumentation for temperature, displacement, and stress monitoring will be used. No augmentation of the existing instrumentation array is planned; however, individual instruments in need of repair will be serviced or replaced, as necessary, both prior to and during the post-retrieval period of monitoring.

Data obtained during post-retrieval monitoring will address issues related to the response of jointed hardrock to cooling such as would occur during retrieval operations and during the eventual cooling of a full-scale repository of the future. These data will also support validation of the design and analysis computer codes, including TRUMP, ADINA, and ADINAT.

7.7 INSTRUMENT CALIBRATION AND EVALUATION

Purpose: Instrument calibration and evaluation are required to assure the quality of the data obtained in the work element in Section 7.6 and also to confirm data already obtained and published.

Plans: Instrument calibration and evaluation comprise a major post-test work element. Primary support responsibility will reside with the site electronics support subcontractor (EG&G-LV).

Near-field (canister and liner) thermocouple calibrations will proceed with spent fuel, electrical simulator, and liner removal operations. Field calibration of all 204 units at 0, 50, and 150°C is planned. Field calibration of intermediate-field thermocouples will take place subsequent to the monitored cool-down period in accordance with the schedule. Samples of epoxy seals and MgO insulation will be taken at the zone boxes, as appropriate.

Field calibration of all MBI- and GXE-series extensometers will be performed in accordance with procedures used during transducer installation and replacement; a total of 116 transducers will be field-calibrated.

Laboratory calibration will be performed on all displacement transducers in accordance with existing procedures. A total of 171 units are included in the laboratory calibrations. These procedures will obtain hysteresis and linearity data as well as calibration constants.

Pull tests will be performed on selected extensometers to evaluate the response of the rods and anchor assemblies of these units. A test fixture will be supplied by LLNL. The tape extensometer and Whittemore gauge will be laboratory-calibrated by EG&G.

Stressmeter holes CSG1, CSG2, NSG3, and NSG4 will be overcored using a 6-in. (150-mm)-diameter core barrel with an EX pilot. This technique is similar to in situ stress overcore techniques but will utilize stressmeters that were permanently installed as part of the SFT-C instrumentation plan. Since stressmeter readings will be made during the overcoring, provision must be made to exit the gauge lead wires through a water swivel. Hole depths are ~18 ft (5.5 m) (see F&S Drawings Nos. M3184-07 and M3184-13).

Field calibration of RAM and CAM radiation monitors will be performed by LLNL-Nevada Health and Safety personnel. This activity can immediately follow spent-fuel retrieval.

The ventilation system flowmeter will be field-calibrated by LLNL-Nevada and personnel of the support contractor, Reynolds Electrical and Engineering Company (REECo). Calibration at two designated flowrates is required.

The two dewpoint sensors will be removed and laboratory-calibrated.

The Watt transducers will be calibrated in the field or removed and calibrated in the laboratory, as appropriate.

7.8 FACILITY DECOMMISSIONING

Purpose: Facility decommissioning is the completing activity for the field phase of the SFT-C.

Plans: Facility decommissioning is planned to ensure that equipment will be removed, placed in service elsewhere, or stored for subsequent use, as appropriate. Plans for decommissioning are currently incomplete but as they develop will focus on retaining the option of occupying the site for further work relatively quickly and inexpensively.

7.9 PREPARATION OF ANNUAL INTERIM, TOPICAL, AND FINAL REPORTS

Purpose: The purpose of the annual interim reports is timely dissemination of integrated technical information about the SFT-C. The purpose of the final report is to document the results and conclusions of this 6-year field project.

Plans: As discussed in Chapter 9, a total of 14 deliverables are scheduled during the late FY82 to mid-FY85 timeframe.

CHAPTER 8

OPTIONS FOR FUTURE UTILIZATION OF THE FACILITY

Continued utilization of the facilities associated with the SFT-C for waste isolation research is a viable option, within the constraint of potential impact of this research on the nuclear weapons testing program. Over $30 million will have been spent in characterization, development, construction, and experimentation at the site.

As discussed below, several important issues in nuclear waste isolation can be addressed at the facility. Because of previous research at the site and existing facilities, considerable cost savings could be realized. The seven research areas discussed here are a representative (not exhaustive) list of possible future uses of the facility.

Storage of reprocessed nuclear wastes has been considered both in basalt (at the Near Surface Test Facility) and in granite (at the SFT-C). This task is seen as being one of engineering demonstration and could probably be executed with modified versions of existing handling equipment. Such a demonstration, by itself, is seen as having little value to the NWTS program.

A test of emplacement of reprocessed waste in combination with electrical resistance heaters could provide important data on the response of jointed hard rock to high temperatures associated with emplacement of high-level reprocessed waste. Such a test could incorporate the demonstration aspects outlined above and also investigate rock response on a large scale to thermal loads several times greater than experienced during the SFT-C. Alternatively, only electrical heat sources could be deployed to eliminate the cost of handling highly radioactive materials. Recent emphasis on a reprocessed waste form, rather than spent fuel, supports investigations in this area.

Several schemes of horizontal emplacement of waste packages have been discussed in recent months. This concept is attractive particularly where high horizontal-to-vertical stress ratios occur (such as in the Basin and Range Province and the Columbia Plateau). The SFT-C, with appropriate modifications, could serve as an engineering test bed for design confirmation and testing of emplacement equipment.

The potential for conducting barrier and backfill tests at the SFT-C has been considered since the test was conceived (Ramspott et al., 1979). A brief waste package field test plan for proposed research of both canister-scale and

drift-scale studies of bentonite and bentonite/sand mixtures was prepared and presented as a test option at the FY81 DOE-HQ Mid-year Review. Recent moves to focus on waste emplacement in the unsaturated zone make investigations of waste package issues (such as capillary-barrier effects) even more appropriate at the SFT-C facility since it, too, is in the unsaturated zone.

Investigations of radionuclide migration in single fractures and in a simulated waste package environment are also possible at the site. Once again, considerable site characterization work has already been completed (Isherwood, Raber, and Stone, 1981) and an engineering test plan for single fracture studies has been developed (Isherwood et al., 1982). Although the greatest contribution of this work would be to granitic media, significant contributions would also be made to generic fracture-flow phenomenology.

Use of the SFT-C and related facilities for generic rock mechanics testing has been addressed in considerable detail. Heuze (1981) summarized the applications and limitations of the facility for generic research. The DOE Office of Basic Energy Science is currently considering utilization of existing test facilities throughout the nation (including the SFT-C) for investigation of rock engineering problems.

The SFT-C has considerable potential as a test bed for instrumentation development and evaluation. The need for development of geotechnical instrumentation has been identified at the SFT-C (Patrick, Carlson, and Rector, 1981) and across the NWTS program (Wilder et al., 1982). We recognize that most of the research and development leading to improvements in geotechnical instrumentation will be conducted in controlled laboratory environments. However, testing in situ (where repository conditions can be simulated) will provide the final evaluation of the instrument systems.

CHAPTER 9

TEST COMPLETION SCHEDULE

The Critical Path Method (CPM) of project planning was utilized to produce a schedule for completing the work elements which were identified in Chapter 7 as being necessary to meet the test objectives. The CPM approach is beneficial in showing the logical interrelationships of tasks. The relationship between project tasks and time is more clearly displayed in Fig. 18.

Important features of the test completion schedule are:

- All objectives of the SFT-C as detailed in Chapter 3 will be met.
- The spent-fuel assemblies will be retrieved and returned to EMAD lag storage during late-February to mid-April 1983.
- Active Westinghouse-EMAD support to the SFT-C will not be required after the third quarter of FY83. (Note that continuing surveillance of the fuel assemblies after that time is not an SFT-C budget activity or responsibility.)
- All SFT-C facilities and equipment will be either mothballed in place or removed from Area 15 as discussed in Chapter 7 by the end of FY84. No subsequent field support costs are anticipated.
- FY85 activity is limited to preparation and publication of the final topical and summary reports.
- Preparation of a total of 10 topical reports in addition to two more annual interim reports and a final summary report during the FY83-85 period. All LLNL effort is scheduled to be completed by mid-FY85.

More detailed scheduling of major work elements will be done as appropriate to the complexity of the task and its interrelationships with other tasks. The first step in detailed scheduling, a tentative retrieval schedule for spent fuel, electrical simulators, and emplacement hole liners, is provided in Table 7.

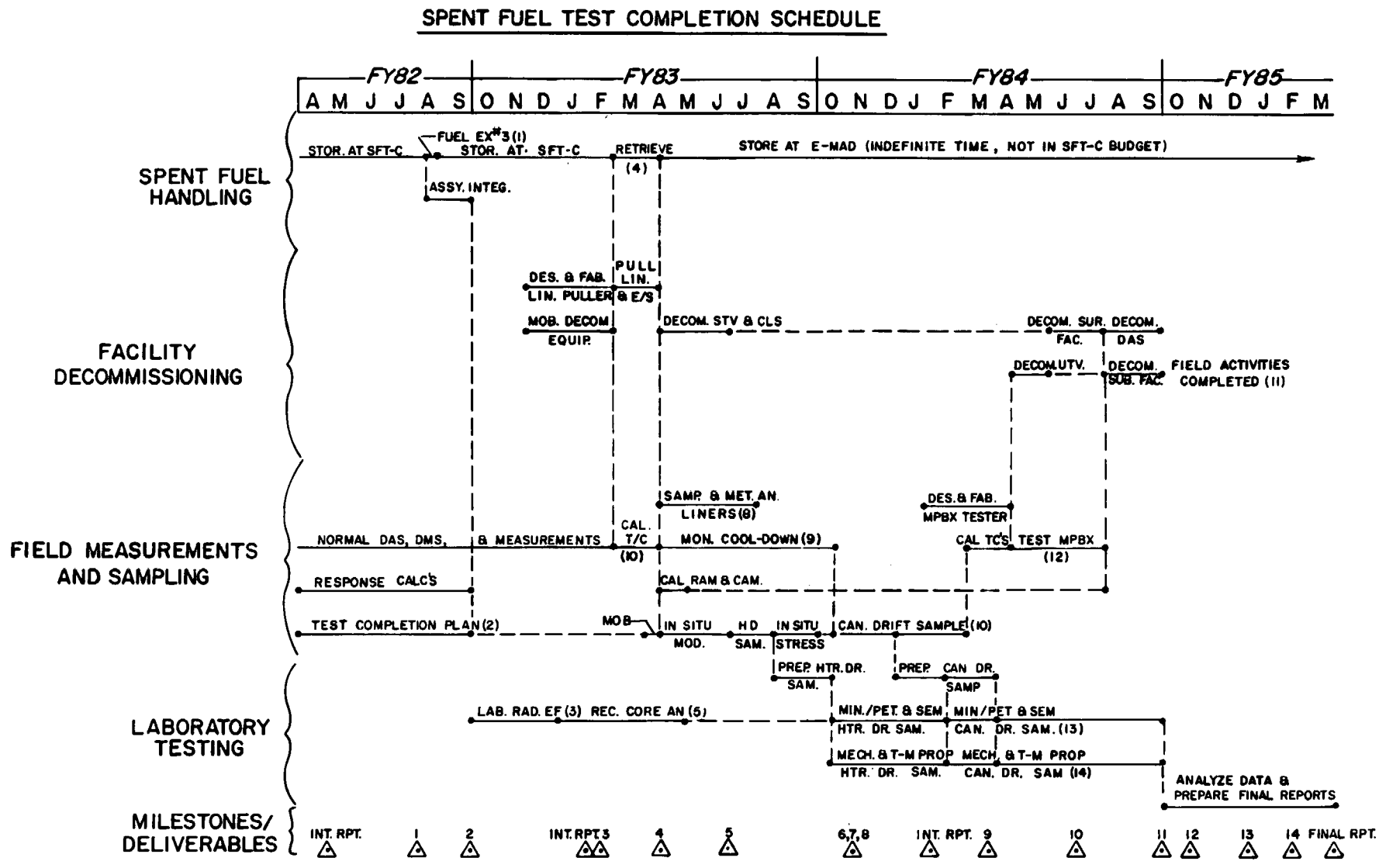

Figure 18. Schedule for completion of Spent Fuel Test--Climax (see Milestones and Deliverables list below).

Milestones and Deliverables Associated with Completion of Spent Fuel Test--Climax

1. Execute third fuel exchange.
2. Draft test completion plan report.
3. Draft radiation effects report.
4. Retrieve spent fuel and place in lag storage at EMAD.
5. Draft record core analysis report.
6. Draft report on *in situ* stresses.
7. Draft report on *in situ* modulus.
8. Draft report on corrosion of metallic components.
9. Draft report on comparison of measured and calculated cool-down response.
10. Draft report on post-test drilling and core logging.
11. SFT-C site decommissioning complete.
12. Post-test report on instrumentation reliability, etc.
13. Draft report on mineralogy, petrology, and SEM studies of core.
14. Draft report on mechanical and thermomechanical properties of core.

Table 7. Tentative schedule for retrieval of spent fuel, electrical simulators, and emplacement hole liners.

Week beginning	Day of week				
	Mon.	Tues.	Wed.	Thurs.	Fri.
Feb. 28, 1983	Demothball	Demothball	Dry run	C01	E/S 17
Mar. 7, 1983	C03	E/S 02 E/S 15	C16	L17	L16
Mar. 14, 1983	C05	E/S 04 E/S 13	C14	L15	L14
Mar. 21, 1983	C12	E/S 06 L13	C11	L12	L11
Mar. 28, 1983	C10	L10	C09	L09	L06
Apr. 4, 1983	C08	L08	C07	L07	L05
Apr. 11, 1983	L04	L03	L02	L01	End retrieval operations

NOTE: Cxx = spent fuel canister in emplacement hole xx.
E/Sxx = electrical simulator in emplacement hole xx.
Lxx = liner from emplacement hole xx.

CHAPTER 10

QUALITY ASSURANCE

Radiological and industrial safety concerns and the need for obtaining demonstrably valid data necessitate the special control provided by a quality assurance (QA) plan. Such a plan is required of all participants in DOE-NV nuclear-waste-storage investigations.

Quality assurance plans and procedures have been developed with the aid of the LLNL QA Office and with the full participation of the technical project officer, task director, subtask leaders, and the project quality engineer. Conformity of these plans to ANSI NQA-1 guidelines and conformity of test activities to the plans and procedures are regularly evaluated by internal and external audits.

The QA plan developed for the SFT-C utilizes the principles and methodology of the LLNL Quality Assurance Program (LLNL QA Manual, M-078, 1978). A Quality Management plan has been developed that addresses all DOE-funded waste isolation projects at LLNL (QMP-M-078-033). A task-specific plan is also employed (QMP-M-078-08). These documents define areas of responsibility for project personnel. The relationships between LLNL and other DOE prime contractors and support organizations are also defined in the documents.

Nine broad areas of quality control are established in the procedures:

- Design control
- Procurement control
- Document control
- Procedures, instructions, and drawings
- Identification and control of items
- Control of processes, test systems, and operations
- Control of measuring and test equipment
- Records management
- Corrective action and control of nonconforming items.

These QA plans, which have been successfully applied during the test to date, will continue to be used during the retrieval and post-retrieval operations at the SFT-C.

CHAPTER 11

SAFETY

Concern for radiological and industrial safety has been addressed throughout the planning, design, and operational phases of this project. Hardware features and operational procedures are consistent with the applicable provisions of the appropriate DOE Manual chapters and NTS Standard Operating Procedures.

A safety assessment document was prepared specifically for this experiment (1980). Operations conducted at EMAD are covered by a separate safety assessment document (1978).

Routine handling operations are governed by a series of Technical Operating Procedures which are approved by the Task Director and the LLNL Resident Manager. Periodic review of these procedures and the execution of "dry run" operations prior to actual spent-fuel handling operations ensures that key personnel are certified for spent-fuel handling tasks.

The LLNL-Nevada Health and Safety group advises the Task Director concerning health and safety issues, provides SFT-C staff briefings, and provides radiation surveillance during test operations. Industrial Safety personnel from REECo inspect the facilities and advise on industrial safety issues.

CHAPTER 12

PUBLIC INFORMATION AND ACCESS TO SITE

Public information activities for this test are controlled by the Public Affairs Plan for Nevada Radioactive Waste Management, which has been approved by the cognizant Assistant Secretaries of DOE. Audio-visual briefing aids have been prepared and are commonly viewed in an on-site briefing room located in the instrumentation trailer (Fig. 2). Visitor access (and schedule coordination with other programs) is controlled by DOE-NV and is subject to standard NTS visitor policies.

We anticipate that visitor access to the site will be affected most during the 6- to 7-week spent-fuel retrieval period. Careful scheduling of site visits during this period will be especially important. Access during periods of post-test sampling will be largely unaffected although the presence of a somewhat more hazardous, noisy, wet environment should be recognized.

A schedule for the dissemination of technical information in the form of topical and periodic reports has been established. The principal reports are defined topically and shown as scheduled deliverables in Fig. 18. These complete the series of topical and periodic reports on the project which started with the test technical concept (Ramspott et al., 1979).

REFERENCES

Bathe, K. J., ADINA, a Finite Element Program for Automatic Dynamic Incremental Nonlinear Analysis, Massachusetts Institute of Technology, Cambridge, Mass., Report 82448-1 (1978).

Bathe, K. J., ADINAT, a Finite Element Program for Automatic Dynamic Incremental Analysis of Temperature, Massachusetts Institute of Technology, Cambridge, Mass., Report 82448-5 (1977).

Brough, W., and W. Patrick, Instrumentation Report #1: Specification, Design, Calibration, and Installation of Instrumentation for an Experimental, High Level, Nuclear Waste Storage Facility, Lawrence Livermore National Laboratory, Livermore, Calif., Report UCRL-53248 (1982).

Butkovich, T. R., Mechanical and Thermomechanical Calculations Related to the Storage of Spent Nuclear Fuel Assemblies in Granite, Lawrence Livermore National Laboratory, Livermore, Calif., Report UCRL-52985 Rev 1 (1981a).

Butkovich, T. R., Thermomechanical Response Calculations of the SFT-C in As-Built Configuration, Lawrence Livermore National Laboratory, Livermore, Calif., Report UCRL-53198 (1981b).

Butkovich, T. R. and D. N. Montan, A Method for Calculating Internal Radiation and Ventilation with the ADINAT Heat-Flow Code, Lawrence Livermore National Laboratory, Livermore, Calif., Report UCRL-52918 (1980).

Butkovich, T. R., J. L. Yow, Jr., and D. N. Montan, Influence of Heat Flow on Drift Closure During Climax Granite Spent Fuel Test: Measurements and Calculations, Lawrence Livermore National Laboratory, Livermore, Calif., Report UCRL-87248 (1982).

Carlson, R. C., W. C. Patrick, D. G. Wilder, W. G. Brough, D. N. Montan, P. Harben, L. B. Ballou, H. C. Heard, Spent Fuel Test-Climax: Technical Measurements Interim Report, FY 1980, Lawrence Livermore National Laboratory, Livermore, Calif., Report UCRL-53064 (1980).

Duncan, J. D., P. A. House, and G. W. Wright, "Spent Fuel Handling System for a Geologic Storage Test at the Nevada Test Site," published in Proceedings of American Nuclear Society Meeting, Las Vegas, Nev., June 1980 (also available as Lawrence Livermore National Laboratory Report UCRL-83728 Preprint, May 1980).

Durham, W. B., and A. E. Abey, "Thermal Conductivity and Diffusivity of Climax Stock Quartz Monzonite at High Pressure and Temperature," presented at the 17th International Thermal Conductivity Conference, Gaithersburg, Md., June 15-19, 1981 (also available as Lawrence Livermore National Laboratory Report UCRL-85192).

Edwards, A. L., TRUMP, A Computer Program for Transient and Steady State Temperature Distribution in Multidimensional Systems, Lawrence Livermore National Laboratory, Livermore, Calif., Report UCRL-14754, Rev. (1972).

Ellis, W. L., Hydraulic-Fracturing Measurements in Two Boreholes Near the Spent Fuel Test-Climax, Climax Stock, Nevada Test Site, U.S. Geological Survey Open File Report (in preparation).

Ellis, W. L., and J. E. Magner, Determination of In Situ Stress in Spent Fuel Test Facility, Climax Stock, Nevada Test Site, Nevada, U.S. Geological Survey Open File Report 82-458 (1982).

Heard, H. C., and L. Page, "Elastic Moduli, Thermal Expansion and Inferred Permeability of Two Granites to 350°C and 55 MPa," J. Geophys. Res. (also available as Lawrence Livermore National Laboratory Report UCRL-86603, 1981).

Heuze, F. E., The Climax Granite, Nevada Test Site, as a Host for a Rock Mechanics Test Facility Related to the Geologic Disposal of High Level Nuclear Wastes, Lawrence Livermore National Laboratory, Livermore, Calif., UCID-18946 (1981).

Heuze, F. E., T. R. Butkovich, and J. C. Peterson, An Analysis of the 'Mine-by' Experiment, Climax Granite, Nevada Test Site, Lawrence Livermore National Laboratory, Livermore, Calif., Report UCRL-53133 (1981a).

Heuze, F. E., W. C. Patrick, R. V. De la Cruz, and C. F. Voss, In Situ Geomechanics, Climax Granite, Nevada Test Site, Lawrence Livermore National Laboratory, Livermore, Calif., Report UCRL-53076 (1981b).

Isherwood, D., E. Raber, and R. Stone, "Site Characterization for Field Radionuclide Migration Studies in Climax Granite," presented at the Materials Research Society Symposium, Boston, Mass., November 16, 1981, and to be published in the Proceedings of Materials Research Society International Symposium (also available as Lawrence Livermore National Laboratory Report UCRL-86194, June 1981).

Isherwood, D., E. Raber, R. Stone, D. Lord, N. Rector, and R. Koszykowski, Engineering Test Plan for Field Radionuclide Migration Experiments in Climax Granite, Lawrence Livermore National Laboratory, Livermore, Calif., Report UCID-19214 (1982).

Majer, E. L., T. V. McEvilly, and M. S. King, "Monitoring an Underground Repository with Modern Seismological Methods," Lawrence Berkeley National Laboratory Report published in Intern. J. Rock Mech. Min. Sci., 18, 517-527 (1981).

Maldonado, F., Summary of the Geology and Physical Properties of the Climax Stock, Nevada Test Site, U.S. Geological Survey Open File Report 77-356 (1977).

Montan, D., and W. Bradkin, Granite Heater Test No. 1, Lawrence Livermore National Laboratory, Livermore, Calif. (in preparation).

Montan, D., and W. Patrick, Thermal Calculations for the Design, Construction, Operation, and Evaluation of the Spent Fuel Test-Climax, Nevada Test Site, Lawrence Livermore National Laboratory, Livermore, Calif., Report UCRL-53238 (1981).

Murray, W. A., Geohydrology of the Climax Stock Granite and the Surrounding Rock Formations, Nevada Test Site, Lawrence Livermore National Laboratory, Livermore, Calif., Report UCRL-53138 (1981).

Nyholm, R. A., W. G. Brough, and N. L. Rector, Spent Fuel Test-Climax Data Acquisition System Integration Report, Lawrence Livermore National Laboratory, Livermore, Calif., Report UCRL-53304 (1982).

Patrick, W. C., and M. C. Mayr, Excavation and Drilling Activities at a Spent Fuel Test Facility in Granitic Rock, Lawrence Livermore National Laboratory, Livermore, Calif., Report UCRL-53227 (1981).

Patrick, W. C., R. Carlson, and N. Rector, Instrumentation Report #2: Identification, Evaluation, and Remedial Actions Related to Transducer Failures at the Spent Fuel Test--Climax, Lawrence Livermore National Laboratory, Livermore, Calif., Report UCRL-53251 (1981).

Patrick, W. C., L. B. Ballou, T. R. Butkovich, R. C. Carlson, W. B. Durham, G. L. Hage, E. L. Majer, D. N. Montan, R. A. Nyholm, N. L. Rector, D. G. Wilder, and J. L. Yow, Jr., Spent Fuel Test--Climax: Technical Measurements Interim Report Fiscal Year 1981, Lawrence Livermore National Laboratory, Livermore, Calif., Report UCRL-53294 (1982).

Quam, W., and T. Devore, Climax Spent Fuel Dosimetry--Progress Report, September 1980 - September 1981, EGG 1183-2432. SANL 909-034, submitted to Lawrence Livermore National Laboratory, Livermore, Calif., by EG&G, Santa Barbara, Calif., October 1981, Contractor Report UCRL-15419.

Ramspott, L. D., L. B. Ballou, R. C. Carlson, D. N. Montan, T. R. Butkovich, J. E. Duncan, W. C. Patrick, D. G. Wilder, W. G. Brough, and M. C. Mayr, Technical Concept for a Test of Geologic Storage of Spent Reactor Fuel in the Climax Granite, Nevada Test Site, Lawrence Livermore National Laboratory, Livermore, Calif., Report UCRL-52796 (1979).

Ramspott, L., L. Ballou, and W. Patrick, "Status Report on the Spent Fuel Test--Climax: A Test of Geologic Storage of High-Level Waste in Granite," prepared for the 110th Annual AIME Meeting, Chicago, Ill., February 22, 1981 (also available as Lawrence Livermore National Laboratory Report UCRL-85516, January 1981).

Safety Assessment Document for the Spent Fuel Handling and Packaging Program Demonstration at the Nevada Test Site, U.S. Department of Energy, Report NVO-198, December 1978.

Safety Assessment Document for the Spent Reactor Fuel Geologic Storage Test in the Climax Granite Stock at the Nevada Test Site, U.S. Department of Energy, Report NVO-210, January 1980.

Wilder, D. G., and W. C. Patrick, "Geotechnical Status Report for Test Storage of Spent Reactor Fuel in Climax Granite, Nevada Test Site," presented at the Symposium on Geological Disposal of High-Level Radioactive Wastes, AEG Annual Meeting, October 20, 1980, published in the AEG Bulletin Vol. XVIII, No. 4, pp. 355-367, 1981 (also available as Lawrence Livermore National Laboratory Report UCRL-85096).

Wilder, D. G., F. Rogue, W. R. Beloff, E. Binnall, and E. C. Gregory, "Executive Committee Report, Geotechnical Instrumentation Working Group Meeting," American Society of Civil Engineers Conference, Las Vegas, Nev., April 26-28, 1982 (Lawrence Livermore National Laboratory, Livermore, Calif., Report UCRL-87183 (1982).

Wilder, D. G., and J. Yow, Fracture Mapping at the Spent Fuel Test--Climax, Lawrence Livermore National Laboratory, Livermore, Calif., Report UCRL-53201 (1981).

Wilder, D., J. Yow, Jr., and R. Thorpe, Core Logging Report, Spent Fuel Test--Climax, Lawrence Livermore National Laboratory, Livermore, Calif. (in preparation).

Yow, J. L., Jr., and T. R. Butkovich, Calculated and Measured Drift Closure During the Spent Fuel Test in Climax Granite, Lawrence Livermore National Laboratory, Livermore, Calif., Report UCRL-87579 (1982).

WTF/lb

U.S. Government Printing Office: 1983/1-687-002/8027

Technical Information Department · Lawrence Livermore National Laboratory
University of California · Livermore, California 94550

First Class Mail

First Class Mail
U.S. Postage
PAID
Livermore, Ca.
Permit No. 154