308 - - - Q200312100009
Scientific Notebook No. 206: Dynamic Study of Drift Stability (01/16/1997 through 06/19/1997)

21
150

R

~~Hengameh Karimi~~ GEN 1/16/97
Mikko Ahola

The Boorum & Pease® Quality Guarantee

The materials and craftsmanship that went into this product are of the finest quality. The pages are thread sewn, meaning they're bound to stay bound. The inks are moisture resistant and will not smear. And the uniform quality of the paper assures consistent rulings, excellent writing surface and erasability. If, at any time during normal use, this product does not perform to your expectations, we will replace it free of charge. Simply write to us:

Boorum & Pease Company
71 Clinton Road, Garden City, NY 11530
Attn: Marketing Services

Any correspondence should include the code number printed at the bottom of this page as well as the book title stamped at the bottom of the spine.

CNWRA
CONTROLLED
COPY ~~108~~ 206 GEN 1/16/97 Reissued under a different number

One Good Book Deserves Many Others.

Look for the complete line of Boorum & Pease® Columnar, Journal, and Record books. Custom-designed books also available by special order. For more information about our Customized Book Program, contact your office products dealer. See back cover for other books in this series.

Made in U.S.A.
RMI200793

Contents

Page

~~West Vally Task (Review of WVNS-SAR-003) Dose Release Calculation~~ GEN 1/16/97 1

1/16/97

Task Information:

This task is performed to compute the dose and risk from radionuclide emissions to air. The findings are based on our review and assessment of available design and construction documents developed by WVNS and their consultants, as well as our own independent integrity analysis of the models and ultimate margin of safety against unacceptable limits of dose releases.

Facility Information:

Facility under review is Vetrification Facility of West Valley Demonstration Project for NRC's review of document "WVNS-SAR-003" (Work Plan: SAR-TRG-WV-008).

Code Information:

Computer Code used is CAP-88-PC (Clean Air Act Assessment Package - 1988). This code is composed of modified versions of AIRDOS-EPA (Mo79)[1] and DARTAB (ORNL 5698)[2]

Model Information:

Our calculations will compute radionuclide concentrations in air, rates of deposition on ground surfaces, concentrations in food and intake rates to people from ingestion of food produced in the west valley area. Estimates of the radionuclide concentrations in produce, leafy vegetables, milk and meat consumed by humans are made by coupling the output of the atmospheric transport models with the U.S. Nuclear Regulatory Commission Regulatory Guide 1.109 Terrestrial food chain models.

---

① Mo79 Moore, R.E et al "AIRDOS-EPA: A Computerized Methodology for Estimating Environmental Concentrations and Dose to Man from Airborn Releases of Radionuclides", (Reprint of ORNL-5538), EPA 520/1-79-009, U.S. EPA office of Radiation Programs, Washington, D.C., 20460.

② ~~ORNL 5698~~ ~~ORNL-5698/DE 81030434~~ ~~DARTAB: A Program to combine Airborne Radionuclide Environmental Exposure Data with Dosimetric Health Effect Data to Generate Tabulations of Predicted Health Impact, Oak Ridge National Laboratory, Oak Ridge, Tennessee, November 1981~~

~~Mark Jarzemba is now working on WSS project, this Scientific Notebook could be transferred to Mark, if he does not have one for WSS Project.~~

~~11/6/97~~

11-8-96

Discussion with N. Sridhar 11/8/96, it was suggested that this Scientific Notebook be returned to the QA Records Room. Since it has only a page and a half utilized - it could be reissued to another person, either using the same contract number, or mark that out and give it a new number.

Bruce Magrito QA
522-5149

Continuation Entries - by Mikko Ahola

The following entries are a continuation of scientific Notebook # 179 documenting work on the project "Dynamic Study of Drift Stability."

On the following pages are attached the datafiles for UDEC analyses as discussed in Scientific Notebook #179.

Specifically the datafile named dyn2a-tmnj1.dat on pages 4-13 in this notebook correspond to the discussion on pages 41-43 of Notebook #179. In addition, the data file listed on pages 14-22 of this notebook correspond to the discussion on pages 44 and 45 in Scientific Notebook #179

MA
2/6/97

Datafile: dyn2a_tmnj1.dat

```
res dyn1a_tmnj1_100yr.sav
*
* delete upper and lower portions of mesh for dynamic analysis
*
del region -35 50 -35 300 35 300 35 50
del region -35 -300 -35 -50 35 -50 35 -300
*
bound -35 35 49 51 xvel 0 yvel 0
bound -35 35 -51 -49 xvel 0 yvel 0
*
hist unbal
cyc 100
*
*******************************************************************
* Replace lateral boundaries with free-field boundaries for start of
* dynamic analysis
*******************************************************************
*
* generate free-field (100 nodes)
*
ffield gen yrange (-52,52) np 100
ffield change mat=5 cons=3
*
* initialize FF stresses to insitu stress state
*
ffield ini sxx -3.5 0.011666
ffield ini szz -3.5 0.011666
ffield ini syy -7.0 0.023333
*
* fix bottom
ffield base xvel=0
ffield base yvel=0
*
* apply boundary stresses at top
ffield top syy -5.833
*
* cycle with FF not applied to grid
* to verify that FF stresses are in equilibrium
*
reset time hist dis
hist n 50
hist ffyd 50 1
hist ffxd 50 1
hist ffyd 50 2
hist ffxd 50 2
hist ffsyy 0 1
hist ffsxx 0 1
hist ffsyy 0 2
hist ffsxx 0 2
hist ffyv  0 1
hist ffyv  0 2
hist ffxd  0 1
hist ffxv  0 1
hist sxx -33 0 syy -33 0 xdis -33 0 xvel -33 0
cycle 1500
save dyn2a_tmnj1_ff.sav
*
*reset time hist dis
*
* Link free field mesh to main mesh
```



```
*
bound mat=5
bound ff range -35,-33 -52,52
bound ff range 33,35 -52,52
cycle 1000
save dyn2a_tmnj1_ff1.sav
*
*
*******************************************************
* Dynamic analysis - no thermal-mechanical loading
* 0.2 g shear wave applied as a stress wave to base
*******************************************************
*
* create viscous boundaries at base
*
bound xvisc range -50,50 -51,-49
*
* apply shear wave as a stress bc (sxy) corresponding to 0.2 g earthquake
*
bound hread 1 velm02.vel
bound hist 1
bound -50,50 -51,-49 stress 0 -7.794 0 hist=1
*
* fix yvelocity at bottom
bound yvel=0 range -50,50 -51,-49
*
* apply boundary conditions at base of free field
*
ffield base sxy=-7.794 hist=1
ffield base xvisc
ffield base yvel=0
*
* assume non-reflective boundary at top surface
*
bound -50,50  49,51 xvisc yvisc
ffield top xvisc yvisc
*
reset time hist dis
hist n=100 sxy 0,-50 sxy 0,50 type=1
hist xvel 0 -50 xvel 0 -2.5 xvel 0 50 xdis 0 -50 xdis 0 50 ydis 0 2.5
hist ffxdis 0 1 ffxdis 0 2
hist ffxvel 0 1 ffxvel 0 2 ffxvel -50 1 ffxvel -50 2
hist xacc 0 -50 xacc 0 -2.5 xacc 0 50
*
damp 0.001 1
mscale part 1.0e-4
*
cycle time=10.0
save dyn2a_tmnj1_10s.sav
cycle time=10.0
save dyn2a_tmnj1_20s.sav
cycle time=10.0
save dyn2a_tmnj1_30s.sav
cycle time=5.0
save dyn2a_tmnj1_35s.sav
ret
#######################################################
set log on
set plot po
*******************************
```

```
*
*  Three tunnel model under thermal-mechanical loading followed by
*  Vertically propagating shear wave (no joints)
*  Viscous boundaries at top of model (no wave reflection from ground surface)
*  Free-field boundaries applied after thermal loading, since the thermal
*  stress was not correct when free-field boundaries were applied before
* the thermal loading
*
**********************************************
start
head
Case 21 - thermal-mechanical-seismic analysis (no joints)
config thermal
prop mat=1 kn=1.0e5 ks=1.0e5 jkn=1.0e5 jks=1.0e5 jcoh=0.08 jtens=0.04 &
jdil=0.0 jfric=38.0
prop mat=5 d=0.002297 k=9.195e3 g=6.612e3 coh=18.0 fric=50.0 tens=20.0 &
dil=0.0
prop mat=5 cond=2.1 thexp=12.0e-6 spec=9.32e8
*
* artificial joint properties
*
prop jmat=2 jkn=1.0e5 jks=1.0e5 jcoh=1.0e10 jten=1.0e10 kn=1.0e5 &
ks=1.0e5
round 0.025
set ovtol 1.0
edge 0.1
block -33.75 -300 -33.75 300 33.75 300 33.75 -300
split -35 -50 35 -50
split -35  50 35  50
split -35 100 35  100
split -35 -100 35 -100
*
arc     0 0   2.5 0 360 12
arc     0 0   7.5 0 360 12
*
arc  22.5 0  25.0 0 360 12
arc  22.5 0  30.0 0 360 12
*
arc -22.5 0 -20.0 0 360 12
arc -22.5 0 -15.0 0 360 12
split -35 0 35 0
*
gen ann 0 0 0 7.5 edge 4.0
gen ann 22.5 0 0 7.5 edge 4.0
gen ann -22.5 0.0 0 7.5 edge 4.0
gen region -35 -50 -35 50 35 50 35 -50 edge 10.0
gen region -35 50 -35 100 35 100 35 50 quad 15.0
gen region -35 -100 -35 -50 35 -50 35 -100 quad 15.0
gen region -35 100 -35 300 35 300 35 100 quad 25.0
gen region -35 -300 -35 -100 35 -100 35 -300 quad 25.0
*
change mat=5 cons=3
change jmat=1 jcons=2
*
change ang -1 1 jmat=2
change ang 89 91 jmat=2
*
grav 0 -9.81
damp auto
bound -50,50 -301,-299 yvel=0
```



```
bound -34,-33.5 -301,301 xvel=0
bound 33.5,34.0 -301,301 xvel=0
insitu stress -3.5 0 -7.0 ygrad 0.0116666 0.0 0.023333 szz -3.5 &
zgrad 0.0 0.0116666
hist yvel 0 0
cycle 1500
sav dyn1a_tmnj1_ins.sav
* excavate tunnels and cycle to equilibrium
*
del ann 0 0 0 2.5
del ann 22.5 0 0 2.5
del ann -22.5 0 0 2.5
*
hist ncyc=10
hist ydis 0 2.5 yvel 0 2.5 syy 2.5 0 sxx 0 2.5
cycle 1500
save dyn1a_tmjn1_exc.sav
*
**********************************************************************
* Thermal mechanical analysis
**********************************************************************
*
* apply decaying heat flux to tunnel wall boundary
*
*******************************************************************
*
* set up thermal boundaries (default thermal b.c. are adiabatic)
*
*  Initial temperature at repository horizon taken to be 29 C
*  - temperature gradient taken to be 0.02 deg C/m
*
*  UDEC doesn't allow user to set up an initial in situ temperature gradient,
*  and as a result, the initem command is used repeatedely to set temperature
*  gradient manually along the vertical nodes.
*  The initial temperatures are specified to remain fixed along the
*  upper and lower boundaries.
*
initem   35.00   -34.0   34.0  -300.99  -290.99
initem   34.80   -34.0   34.0  -290.99  -280.99
initem   34.60   -34.0   34.0  -280.99  -270.99
initem   34.40   -34.0   34.0  -270.99  -260.99
initem   34.20   -34.0   34.0  -260.99  -250.99
initem   34.00   -34.0   34.0  -250.99  -240.99
initem   33.80   -34.0   34.0  -240.99  -230.99
initem   33.60   -34.0   34.0  -230.99  -220.99
initem   33.40   -34.0   34.0  -220.99  -210.99
initem   33.20   -34.0   34.0  -210.99  -200.99
initem   33.00   -34.0   34.0  -200.99  -190.99
initem   32.80   -34.0   34.0  -190.99  -180.99
initem   32.60   -34.0   34.0  -180.99  -170.99
initem   32.40   -34.0   34.0  -170.99  -160.99
initem   32.20   -34.0   34.0  -160.99  -150.99
initem   32.00   -34.0   34.0  -150.99  -140.99
initem   31.80   -34.0   34.0  -140.99  -130.99
initem   31.60   -34.0   34.0  -130.99  -120.99
initem   31.40   -34.0   34.0  -120.99  -110.99
initem   31.20   -34.0   34.0  -110.99  -100.99
initem   31.00   -34.0   34.0  -100.99   -90.99
initem   30.80   -34.0   34.0   -90.99   -80.99
initem   30.60   -34.0   34.0   -80.99   -70.99
```

```
initem   30.40  -34.0   34.0  -70.99  -60.99
initem   30.20  -34.0   34.0  -60.99  -50.99
initem   30.00  -34.0   34.0  -50.99  -45.99
initem   29.90  -34.0   34.0  -45.99  -40.99
initem   29.80  -34.0   34.0  -40.99  -35.99
initem   29.70  -34.0   34.0  -35.99  -30.99
initem   29.60  -34.0   34.0  -30.99  -25.99
initem   29.50  -34.0   34.0  -25.99  -24.99
initem   29.00  -34.0   34.0  -24.99   24.99
initem   28.50  -34.0   34.0   24.99   25.99
initem   28.40  -34.0   34.0   25.99   30.99
initem   28.30  -34.0   34.0   30.99   35.99
initem   28.20  -34.0   34.0   35.99   40.99
initem   28.10  -34.0   34.0   40.99   45.99
initem   28.00  -34.0   34.0   45.99   50.99
initem   27.80  -34.0   34.0   50.99   60.99
initem   27.60  -34.0   34.0   60.99   70.99
initem   27.40  -34.0   34.0   70.99   80.99
initem   27.20  -34.0   34.0   80.99   90.99
initem   27.00  -34.0   34.0   90.99  100.99
initem   26.80  -34.0   34.0  100.99  110.99
initem   26.60  -34.0   34.0  110.99  120.99
initem   26.40  -34.0   34.0  120.99  130.99
initem   26.20  -34.0   34.0  130.99  140.99
initem   26.00  -34.0   34.0  140.99  150.99
initem   25.80  -34.0   34.0  150.99  160.99
initem   25.60  -34.0   34.0  160.99  170.99
initem   25.40  -34.0   34.0  170.99  180.99
initem   25.20  -34.0   34.0  180.99  190.99
initem   25.00  -34.0   34.0  190.99  200.99
initem   24.80  -34.0   34.0  200.99  210.99
initem   24.60  -34.0   34.0  210.99  220.99
initem   24.40  -34.0   34.0  220.99  230.99
initem   24.20  -34.0   34.0  230.99  240.99
initem   24.00  -34.0   34.0  240.99  250.99
initem   23.80  -34.0   34.0  250.99  260.99
initem   23.60  -34.0   34.0  260.99  270.99
initem   23.40  -34.0   34.0  270.99  280.99
initem   23.20  -34.0   34.0  280.99  290.99
initem   23.00  -34.0   34.0  290.99  300.99
*
* fix top and bottom boundary temperatures
*
tfix     23.00  range -34.0 34.0   299.0  301.0
tfix     35.00  range -34.0 34.0  -301.0 -299.0
*
print bound
reset time
*
thist ntcyc=10 tem 0 2.5 tem 0 5 tem 0 10 tem 0 25 tem 0 50 tem 0 100
thist tem 0 150 tem 0 200 tem 0 300 tem 2.5 0 tem 5 0 tem 10 0
thist tem 11.25 0
thist tem 22.5 2.5 tem -22.5 2.5
*
* apply heat flux to tunnel walls
*
thapp ann   0.0 0.0 2.4 2.56 flux 28.4701 -3.2197e-10
thapp ann  22.5 0.0 2.4 2.56 flux 28.4701 -3.2197e-10
thapp ann -22.5 0.0 2.4 2.56 flux 28.4701 -3.2197e-10
*
```



```
* run thermal time to 1 week
*
run age=6.048e5 temp=10000  step=1000000 tol=0.05
reset damp
cycle 3500
*
* run thermal time to 1 month
*
run age=2.592e6 temp=10000 step=1000000 tol=0.05
reset damp
cycle 3500
*
* run thermal time to 3 months
*
run age=7.776e6 delt=3600.0  temp=10000 step=1000000 tol=0.05 impl
reset damp
cycle 3500
*
* run thermal time to 6 months
*
run age=1.5552e7 delt=3600.0  temp=10000 step=1000000 tol=0.05 impl
reset damp
cycle 3500
*
* run thermal time to 9 months
*
run age=2.3328e7 delt=7200.0  temp=10000 step=1000000 tol=0.05 impl
reset damp
cycle 3500
*
* run thermal time to 1 year
*
run age=3.1536e7 delt=1.08e4  temp=10000 step=1000000 tol=0.05 impl
reset damp
cycle 3500
*
* run thermal time to 18 months
*
run age=4.7304e7 delt=2.16e4  temp=10000 step=1000000 tol=0.05 impl
reset damp
cycle 7500
*
* run thermal time to 2 years
*
run age=6.3072e7 delt=8.64e4  temp=10000 step=1000000 tol=0.05 impl
reset damp
cycle 7500
*
* run thermal time to 3 years
*
run age=9.4608e7 delt=8.64e4  temp=10000 step=1000000 tol=0.05 impl
reset damp
cycle 7500
*
* run thermal time to 4 years
*
run age=1.26144e8 delt=8.64e4  temp=10000 step=1000000 tol=0.05 impl
reset damp
cycle 7500
*
```

```
* run thermal time to 5 years
*
run age=1.5768e8 delt=8.64e4  temp=10000 step=1000000 tol=0.05 impl
reset damp
cycle 7500
*
* run thermal time to 7.5 years
*
run age=2.3652e8 delt=8.64e4 temp=10000 step=1000000 tol=0.05 impl
reset damp
cycle 7500
*
* run thermal time to 10 years
*
run age=3.1536e8 delt=8.64e4 temp=10000 step=1000000 tol=0.05 impl
reset damp
cycle 7500
sav dyn1a_tmnj1_10yr.sav
*
* run thermal time to 15 years
*
run age=4.7304e8 delt=8.64e4 temp=10000 step=1000000 tol=0.05 impl
reset damp
cycle 7500
*
* run thermal time to 20 years
*
run age=6.3072e8 delt=8.64e4 temp=10000 step=1000000 tol=0.05 impl
reset damp
cycle 7500
*
* run thermal time to 30 years
*
run age=9.4608e8 delt=8.64e4 temp=10000 step=1000000 tol=0.05 impl
reset damp
cycle 7500
save dyn1a_tmnj1_30yr.sav
*
* run thermal time to 40 years
*
run age=1.26144e9 delt=8.64e4 temp=10000 step=1000000 tol=0.05 impl
reset damp
cycle 7500
pr max
*
* run thermal time to 50 years
*
run age=1.5768e9 delt=8.64e4 temp=10000 step=1000000 tol=0.05 impl
reset damp
cycle 7500
sav dyn1a_tmnj1_50yr.sav
*
* run thermal time to 75  years
*
run age=2.3652e9 delt=8.64e4 temp=10000 step=1000000 tol=0.05 impl
reset damp
cycle 8000
*
* run thermal time to 100  years
*
```



```
run age=3.1536e9 delt=8.64e4 temp=10000 step=1000000 tol=0.05 impl
reset damp
cycle 8000
save dyn1a_tmnj1_100yr.sav
*
*********************************************************************
* Replace lateral boundaries with free-field boundaries for start of
* dynamic analysis
*********************************************************************
*
* generate free-field (100 nodes)
*
ffield gen yrange (-300,300) np 100
ffield change mat=5 cons=3
*
* initialize FF stresses to insitu stress state
*
ffield ini sxx -3.5 0.011666
ffield ini szz -3.5 0.011666
ffield ini syy -7.0 0.023333
*
* fix bottom
ffield base xvel=0
ffield base yvel=0
*
* cycle with FF not applied to grid
* to verify that FF stresses are in equilibrium
*
reset time hist dis
hist n 10
hist ffyd 300 1
hist ffxd 300 1
hist ffyd 300 2
hist ffxd 300 2
hist ffsyy 0 1
hist ffsxx 0 1
hist ffsyy 0 2
hist ffsxx 0 2
hist ffyv  0 1
hist ffyv  0 2
hist ffxd  0 1
hist ffxv  0 1
cycle 1500
save dyn1a_tmnj1_ff.sav
*
reset time hist dis
*
* Link free field mesh to main mesh
*
bound mat=5
bound ff range -34,-33.5 -301,301
bound ff range 33.5,34 -301,301
cycle 1500
save dyn1a_tmnj1_ff1.sav
*
*
*******************************************************
* Dynamic analysis - no thermal-mechanical loading
* 0.2 g shear wave applied as a stress wave to base
*******************************************************
```

```
*
* create viscous boundaries at base
*
bound xvisc range -50,50 -301,-299
*
* apply shear wave as a stress bc (sxy) corresponding to 0.2 g earthquake
*
bound hread 1 vel02.vel
bound hist 1
bound -50,50 -301,-299 stress 0 -7.794 0 hist=1
*
* fix yvelocity at bottom
bound yvel=0 range -50,50 -301,-299
*
* apply boundary conditions at base of free field
*
ffield base sxy=-7.794 hist=1
ffield base xvisc
ffield base yvel=0
*
* assume non-reflective boundary at ground surface
*
bound -50,50  299,301 xvisc yvisc
ffield top xvisc yvisc
*
hist n=100 sxy 0,-300 sxy 0,300 type=1
hist xvel 0 -300 xvel 0 -2.5 xvel 0 300 xdis 0 -300 xdis 0 300
hist ffxdis 0 1 ffxdis 0 2
hist ffxvel 0 1 ffxvel 0 2 ffxvel -300 1 ffxvel -300 2
hist xacc 0 -300 xacc 0 -2.5 xacc 0 300
*
damp 0.001 1
mscale part 1.0e-4
*
cycle time=10.0
save dyn1a_tmnj1_10s.sav
cycle time=10.0
save dyn1a_tmnj1_20s.sav
cycle time=10.0
save dyn1a_tmnj1_30s.sav
cycle time=5.0
save dyn1a_tmnj1_35s.sav
ret
```


Datafile: dynza_tmj1.dat

```
set log on
set plot po
*********************************************************************
*
*  Three tunnel model under thermal-mechanical loading followed by
*  Vertically propagating shear wave (with joints)
*  Viscous boundaries at top of model (no wave reflection from ground surface)
*  Free-field boundaries applied after thermal loading, since the thermal
*  stress was not correct when free-field boundaries were applied before
* the thermal loading
*
*** Joint orientations ***
* 1st joint set -  10 degrees ccw from horizontal  - 1.25 m spacing
* 2nd joint set -  85 degrees ccw from horizontal  - 0.50 m spacing
*********************************************************************
start
head
Case 21 - thermal-mechanical-seismic analysis (with joints)
config thermal
prop mat=1 kn=1.0e5 ks=1.0e5 jkn=1.0e5 jks=1.0e5 jcoh=0.08 jtens=0.04 &
jdil=0.0 jfric=38.0
prop mat=5 d=0.002297 k=9.195e3 g=6.612e3 coh=18.0 fric=50.0 tens=20.0 &
dil=0.0
prop mat=5 cond=2.1 thexp=12.0e-6 spec=9.32e8
*
* artificial joint properties
*
prop jmat=2 jkn=1.0e5 jks=1.0e5 jcoh=1.0e10 jten=1.0e10 kn=1.0e5 &
ks=1.0e5
round 0.025
set ovtol 1.0
edge 0.1
block -33.75 -300 -33.75 300 33.75 300 33.75 -300
split -35 -50 35 -50
split -35  50 35  50
split -35 100 35  100
split -35 -100 35 -100
split -30 -50 -30 50
split 30 -50 30 50
*
* create jointing
*
jregion -25 -50 -25 50 25 50 25 -50
jset 85.0 0.0 100.0 0.0 0.0 0.0 12.0 0.0 -20 -22
jregion -30 -30 -30 30 30 40 30 -20
jset 10.0 0.0 50.0 0.0 0.0 0.0 15.0 0.0 -20 -22
*
*jregion -33.75 50 -31.0 100 40 100 40 50
*jset 85.0 0.0 100.0 0.0 0.0 0.0 24.0 0.0 -20 -22
*
*jregion -40 -100 -40 -50 40 -50 40 -100
*jset 85.0 0.0 100.0 0.0 0.0 0.0 24.0 0.0 -20 -22
*
** detailed jointing around tunnel
*
jregion -30.0,-23.76 -27.81,22.32 30.00,32.51 28.94,-13.37
jset 85.0 0.0 100.0 0.0 0.0 0.0 4.0 0.0 -20 -22
jregion -34.0,-25.76 -34,21.93 34.0,34.51 34.0,-13.18
jset 10.0 0.0 50.0 0.0 0.0 0.0 7.5 0.0 -20 -22
*
```

```
*jregion -11.17,-12.83 -9.137,10.38 11.25,13.97 9.224,-9.231
*jset 85.0 0.0 100.0 0.0 0.0 0.0 1.0 0.0 -20 -22
*jset 10.0 0.0 50.0 0.0 0.0 0.0 2.5 0.0 -20 -22
*
*jregion -4.373,-4.013 -3.696,3.722 4.46,5.16 3.784,-2.575
*jset 85.0 0.0 100.0 0.0 0.0 0.0 0.5 0.0 -20 -22
*jset 10.0 0.0 50.0 0.0 0.0 0.0 1.25 0.0 -20 -22
*
arc     0 0   2.5 0 360 17
arc  22.5 0  25.0 0 360 12
arc -22.5 0 -20.0 0 360 12
*
jd
del area 5.0e-3
*
gen region -34 -15 -34 10 34 15 34 -5 edge 3.0
gen region -40 -50 -40 50 40 50 40 -50 edge 7.5
gen region -40 50 -40 100 40 100 40 50 quad 12.5
gen region -40 -100 -40 -50 40 -50 40 -100 quad 12.5
gen region -40 100 -40 300 40 300 40 100 quad 25.0
gen region -40 -300 -40 -100 40 -100 40 -300 quad 25.0
*
change mat=5 cons=3
change jmat=1 jcons=2
*
change ang -1 1 jmat=2
change ang 89 91 jmat=2
*
grav 0 -9.81
damp auto
bound -50,50 -301,-299 yvel=0
bound -34,-33.5 -301,301 xvel=0
bound 33.5,34.0 -301,301 xvel=0
insitu stress -3.5 0 -7.0 ygrad 0.0116666 0.0 0.023333 szz -3.5 &
zgrad 0.0 0.0116666
hist yvel 0 0
cycle 1500
sav dyn2a_tmj1_ins.sav
*
* excavate tunnels and cycle to equilibrium
*
del ann 0 0 0 2.5
del ann 22.5 0 0 2.5
del ann -22.5 0 0 2.5
*
reset hist time dis
hist ncyc=10
hist ydis 0 2.5 yvel 0 2.5 syy 2.5 0 sxx 0 2.5
cycle 1500
save dyn2a_tmj1_exc.sav
ret
*
*****************************************************************
* Thermal mechanical analysis
*****************************************************************
*
* apply decaying heat flux to tunnel wall boundary
*
*****************************************************************
*
```



```
* set up thermal boundaries (default thermal b.c. are adiabatic)
*
*  Initial temperature at repository horizon taken to be 29 C
*  - temperature gradient taken to be 0.02 deg C/m
*
*  UDEC doesn't allow user to set up an initial in situ temperature gradient,
*  and as a result, the initem command is used repeatedely to set temperature
*  gradient manually along the vertical nodes.
*  The initial temperatures are specified to remain fixed along the
*  upper and lower boundaries.
*
initem   35.00  -34.0   34.0  -300.99  -290.99
initem   34.80  -34.0   34.0  -290.99  -280.99
initem   34.60  -34.0   34.0  -280.99  -270.99
initem   34.40  -34.0   34.0  -270.99  -260.99
initem   34.20  -34.0   34.0  -260.99  -250.99
initem   34.00  -34.0   34.0  -250.99  -240.99
initem   33.80  -34.0   34.0  -240.99  -230.99
initem   33.60  -34.0   34.0  -230.99  -220.99
initem   33.40  -34.0   34.0  -220.99  -210.99
initem   33.20  -34.0   34.0  -210.99  -200.99
initem   33.00  -34.0   34.0  -200.99  -190.99
initem   32.80  -34.0   34.0  -190.99  -180.99
initem   32.60  -34.0   34.0  -180.99  -170.99
initem   32.40  -34.0   34.0  -170.99  -160.99
initem   32.20  -34.0   34.0  -160.99  -150.99
initem   32.00  -34.0   34.0  -150.99  -140.99
initem   31.80  -34.0   34.0  -140.99  -130.99
initem   31.60  -34.0   34.0  -130.99  -120.99
initem   31.40  -34.0   34.0  -120.99  -110.99
initem   31.20  -34.0   34.0  -110.99  -100.99
initem   31.00  -34.0   34.0  -100.99   -90.99
initem   30.80  -34.0   34.0   -90.99   -80.99
initem   30.60  -34.0   34.0   -80.99   -70.99
initem   30.40  -34.0   34.0   -70.99   -60.99
initem   30.20  -34.0   34.0   -60.99   -50.99
initem   30.00  -34.0   34.0   -50.99   -45.99
initem   29.90  -34.0   34.0   -45.99   -40.99
initem   29.80  -34.0   34.0   -40.99   -35.99
initem   29.70  -34.0   34.0   -35.99   -30.99
initem   29.60  -34.0   34.0   -30.99   -25.99
initem   29.50  -34.0   34.0   -25.99   -24.99
initem   29.00  -34.0   34.0   -24.99    24.99
initem   28.50  -34.0   34.0    24.99    25.99
initem   28.40  -34.0   34.0    25.99    30.99
initem   28.30  -34.0   34.0    30.99    35.99
initem   28.20  -34.0   34.0    35.99    40.99
initem   28.10  -34.0   34.0    40.99    45.99
initem   28.00  -34.0   34.0    45.99    50.99
initem   27.80  -34.0   34.0    50.99    60.99
initem   27.60  -34.0   34.0    60.99    70.99
initem   27.40  -34.0   34.0    70.99    80.99
initem   27.20  -34.0   34.0    80.99    90.99
initem   27.00  -34.0   34.0    90.99   100.99
initem   26.80  -34.0   34.0   100.99   110.99
initem   26.60  -34.0   34.0   110.99   120.99
initem   26.40  -34.0   34.0   120.99   130.99
initem   26.20  -34.0   34.0   130.99   140.99
initem   26.00  -34.0   34.0   140.99   150.99
initem   25.80  -34.0   34.0   150.99   160.99
```

```
initem    25.60   -34.0    34.0   160.99   170.99
initem    25.40   -34.0    34.0   170.99   180.99
initem    25.20   -34.0    34.0   180.99   190.99
initem    25.00   -34.0    34.0   190.99   200.99
initem    24.80   -34.0    34.0   200.99   210.99
initem    24.60   -34.0    34.0   210.99   220.99
initem    24.40   -34.0    34.0   220.99   230.99
initem    24.20   -34.0    34.0   230.99   240.99
initem    24.00   -34.0    34.0   240.99   250.99
initem    23.80   -34.0    34.0   250.99   260.99
initem    23.60   -34.0    34.0   260.99   270.99
initem    23.40   -34.0    34.0   270.99   280.99
initem    23.20   -34.0    34.0   280.99   290.99
initem    23.00   -34.0    34.0   290.99   300.99
*
* fix top and bottom boundary temperatures
*
tfix      23.00  range -34.0 34.0   299.0  301.0
tfix      35.00  range -34.0 34.0  -301.0 -299.0
*
print bound
reset time
*
thist ntcyc=10 tem 0 2.5 tem 0 5 tem 0 10 tem 0 25 tem 0 50 tem 0 100
thist tem 0 150 tem 0 200 tem 0 300 tem 2.5 0 tem 5 0 tem 10 0
thist tem 11.25 0
thist tem 22.5 2.5 tem -22.5 2.5
*
* apply heat flux to tunnel walls
*
thapp ann   0.0 0.0 2.4 2.56 flux 28.4701 -3.2197e-10
thapp ann  22.5 0.0 2.4 2.56 flux 28.4701 -3.2197e-10
thapp ann -22.5 0.0 2.4 2.56 flux 28.4701 -3.2197e-10
*
* run thermal time to 1 week
*
run age=6.048e5 temp=10000  step=1000000 tol=0.05
reset damp
cycle 3500
*
* run thermal time to 1 month
*
run age=2.592e6 temp=10000 step=1000000 tol=0.05
reset damp
cycle 3500
*
* run thermal time to 3 months
*
run age=7.776e6 delt=3600.0  temp=10000 step=1000000 tol=0.05 impl
reset damp
cycle 3500
*
* run thermal time to 6 months
*
run age=1.5552e7 delt=3600.0  temp=10000 step=1000000 tol=0.05 impl
reset damp
cycle 3500
*
* run thermal time to 9 months
*
```



```
run age=2.3328e7 delt=7200.0  temp=10000 step=1000000 tol=0.05 impl
reset damp
cycle 3500
*
* run thermal time to 1 year
*
run age=3.1536e7 delt=1.08e4  temp=10000 step=1000000 tol=0.05 impl
reset damp
cycle 3500
*
* run thermal time to 18 months
*
run age=4.7304e7 delt=2.16e4  temp=10000 step=1000000 tol=0.05 impl
reset damp
cycle 7500
*
* run thermal time to 2 years
*
run age=6.3072e7 delt=8.64e4  temp=10000 step=1000000 tol=0.05 impl
reset damp
cycle 7500
*
* run thermal time to 3 years
*
run age=9.4608e7 delt=8.64e4  temp=10000 step=1000000 tol=0.05 impl
reset damp
cycle 7500
*
* run thermal time to 4 years
*
run age=1.26144e8 delt=8.64e4  temp=10000 step=1000000 tol=0.05 impl
reset damp
cycle 7500
*
* run thermal time to 5 years
*
run age=1.5768e8 delt=8.64e4  temp=10000 step=1000000 tol=0.05 impl
reset damp
cycle 7500
*
* run thermal time to 7.5 years
*
run age=2.3652e8 delt=8.64e4 temp=10000 step=1000000 tol=0.05 impl
reset damp
cycle 7500
*
* run thermal time to 10 years
*
run age=3.1536e8 delt=8.64e4 temp=10000 step=1000000 tol=0.05 impl
reset damp
cycle 7500
sav dyn2a_tmj1_10yr.sav
*
* run thermal time to 15 years
*
run age=4.7304e8 delt=8.64e4 temp=10000 step=1000000 tol=0.05 impl
reset damp
cycle 7500
*
* run thermal time to 20 years
```

```
*
run age=6.3072e8 delt=8.64e4 temp=10000 step=1000000 tol=0.05 impl
reset damp
cycle 7500
*
* run thermal time to 30 years
*
run age=9.4608e8 delt=8.64e4 temp=10000 step=1000000 tol=0.05 impl
reset damp
cycle 7500
save dyn2a_tmj1_30yr.sav
*
* run thermal time to 40 years
*
run age=1.26144e9 delt=8.64e4 temp=10000 step=1000000 tol=0.05 impl
reset damp
cycle 7500
pr max
*
* run thermal time to 50 years
*
run age=1.5768e9 delt=8.64e4 temp=10000 step=1000000 tol=0.05 impl
reset damp
cycle 7500
sav dyn2a_tmj1_50yr.sav
*
* run thermal time to 75  years
*
run age=2.3652e9 delt=8.64e4 temp=10000 step=1000000 tol=0.05 impl
reset damp
cycle 8000
*
* run thermal time to 100  years
*
run age=3.1536e9 delt=8.64e4 temp=10000 step=1000000 tol=0.05 impl
reset damp
cycle 8000
save dyn2a_tmj1_100yr.sav
*
*
* delete upper and lower portions of mesh for dynamic analysis
*
del region -35 50 -35 300 35 300 35 50
del region -35 -300 -35 -50 35 -50 35 -300
*
bound -35 35 49 51 xvel 0 yvel 0
bound -35 35 -51 -49 xvel 0 yvel 0
*
hist unbal
cyc 100
*
*****************************************************************
* Replace lateral boundaries with free-field boundaries for start of
* dynamic analysis
*****************************************************************
*
* generate free-field (100 nodes)
*
ffield gen yrange (-52,52) np 100
ffield change mat=5 cons=3
```



```
*
* initialize FF stresses to insitu stress state
*
ffield ini sxx -3.5 0.011666
ffield ini szz -3.5 0.011666
ffield ini syy -7.0 0.023333
*
* fix bottom
ffield base xvel=0
ffield base yvel=0
*
* apply boundary stresses at top
ffield top syy -5.833
*
* cycle with FF not applied to grid
* to verify that FF stresses are in equilibrium
*
reset time hist dis
hist n 50
hist ffyd 50 1
hist ffxd 50 1
hist ffyd 50 2
hist ffxd 50 2
hist ffsyy 0 1
hist ffsxx 0 1
hist ffsyy 0 2
hist ffsxx 0 2
hist ffyv  0 1
hist ffyv  0 2
hist ffxd  0 1
hist ffxv  0 1
hist sxx -33 0 syy -33 0 xdis -33 0 xvel -33 0
cycle 1500
save dyn2a_tmj1_ff.sav
*
* Link free field mesh to main mesh
*
bound mat=5
bound ff range -35,-33 -52,52
bound ff range 33,35 -52,52
cycle 1000
save dyn2a_tmj1_ff1.sav
*
*
*****************************************************
* Dynamic analysis - no thermal-mechanical loading
* 0.2 g shear wave applied as a stress wave to base
*****************************************************
*
* create viscous boundaries at base
*
bound xvisc range -50,50 -51,-49
*
* apply shear wave as a stress bc (sxy) corresponding to 0.2 g earthquake
*
bound hread 1 velm02.vel
bound hist 1
bound -50,50 -51,-49 stress 0 -7.794 0 hist=1
*
* fix yvelocity at bottom
```

```
bound yvel=0 range -50,50 -51,-49
*
* apply boundary conditions at base of free field
*
ffield base sxy=-7.794 hist=1
ffield base xvisc
ffield base yvel=0
*
* assume non-reflective boundary at top surface
*
bound -50,50  49,51 xvisc yvisc
ffield top xvisc yvisc
*
reset time hist dis
hist n=100 sxy 0,-50 sxy 0,50 type=1
hist xvel 0 -50 xvel 0 -2.5 xvel 0 50 xdis 0 -50 xdis 0 50 ydis 0 2.5
hist ffxdis 0 1 ffxdis 0 2
hist ffxvel 0 1 ffxvel 0 2 ffxvel -50 1 ffxvel -50 2
hist xacc 0 -50 xacc 0 -2.5 xacc 0 50
*
damp 0.001 1
mscale part 1.0e-4
*
cycle time=10.0
save dyn2a_tmj1_10s.sav
cycle time=10.0
save dyn2a_tmj1_20s.sav
cycle time=10.0
save dyn2a_tmj1_30s.sav
cycle time=5.0
save dyn2a_tmj1_35s.sav
ret
```

This ~~notebook~~ is the continuation of Scientific Notebook 179

I have reviewed this Scientific Notebook and find it in compliance with SAP-601.

Element Manager, RDCO
2-7-97

the final thermo-mechanical (TM) model to establish the TM loading state at 100 yrs of heating and prior to dynamic loading is as ~~follows~~ shown in the following figure.

TM Model

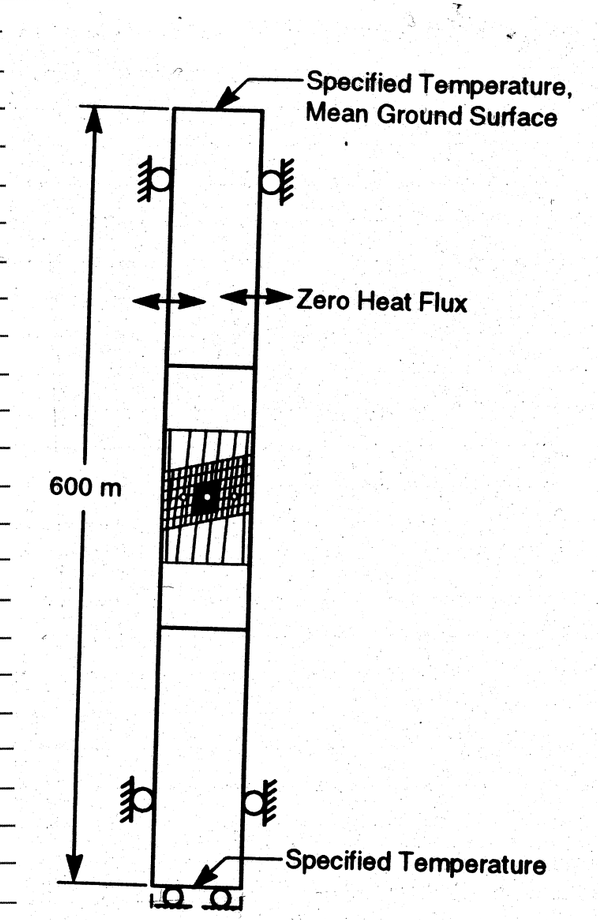

Note: only discrete blocks shown and finite difference zones excluded.

The final dynamic model is a submodel of the thermo-mechanical model and shown in below figure without boundary conditions:

Dynamic Model.

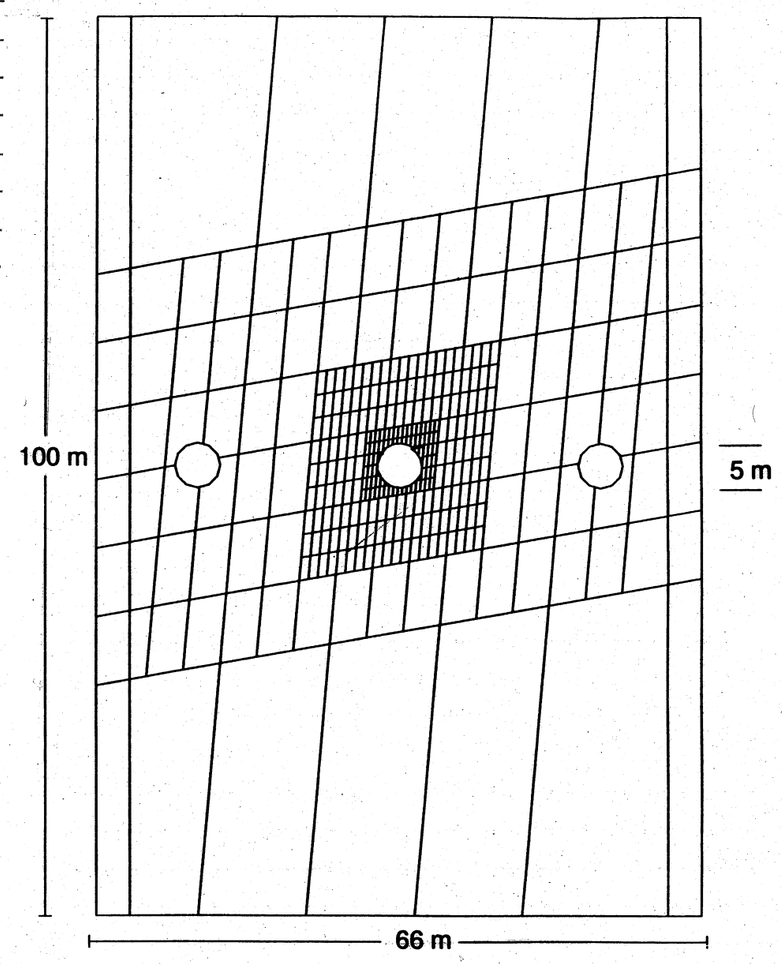

For this model, the upper and lower portions of the TM model are deleted (i.e., $y > 50$ m, and $y < -50$ m)

MA The gridpoints along the upper and lower boundaries of the new submodel are fixed. A small amount of mechanical cycling in time is then conducted to establish the appropriate boundary forces along top and bottom boundaries which should correspond to the forces at that same level in the larger model shown on page 22. Once this is accomplished, the top and bottom boundaries are replaced by viscous boundaries to eliminate wave reflections for the dynamic runs. The boundary conditions along the 2 vertical side boundaries will vary depending on the type of dynamic input at the base. For a compressive wave, the roller boundary conditions will remain along the sides as was done for the TM analyses as shown on the next page (#24). The boundary conditions for the shear wave input at base require the use of free-field boundaries along the two sides as discussed in the UDEC Version 3.0 User's manual and in the corresponding scientific notebook #179.

MA
5/1/97

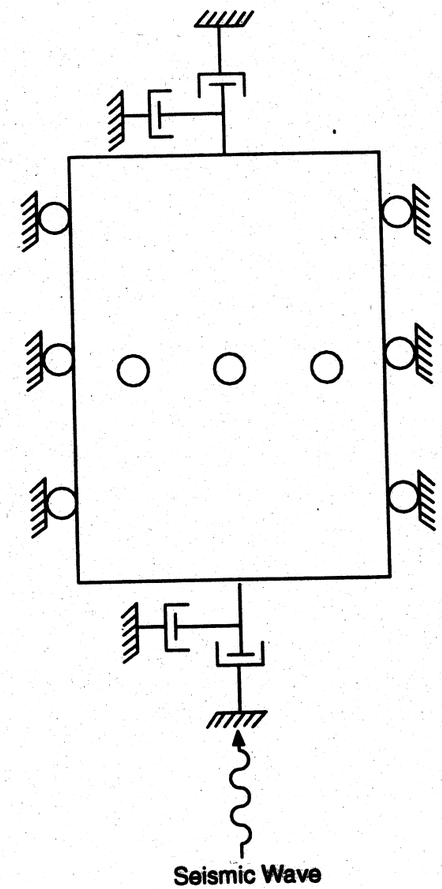

Boundary Conditions for compressive p-wave input. Joints not plotted.

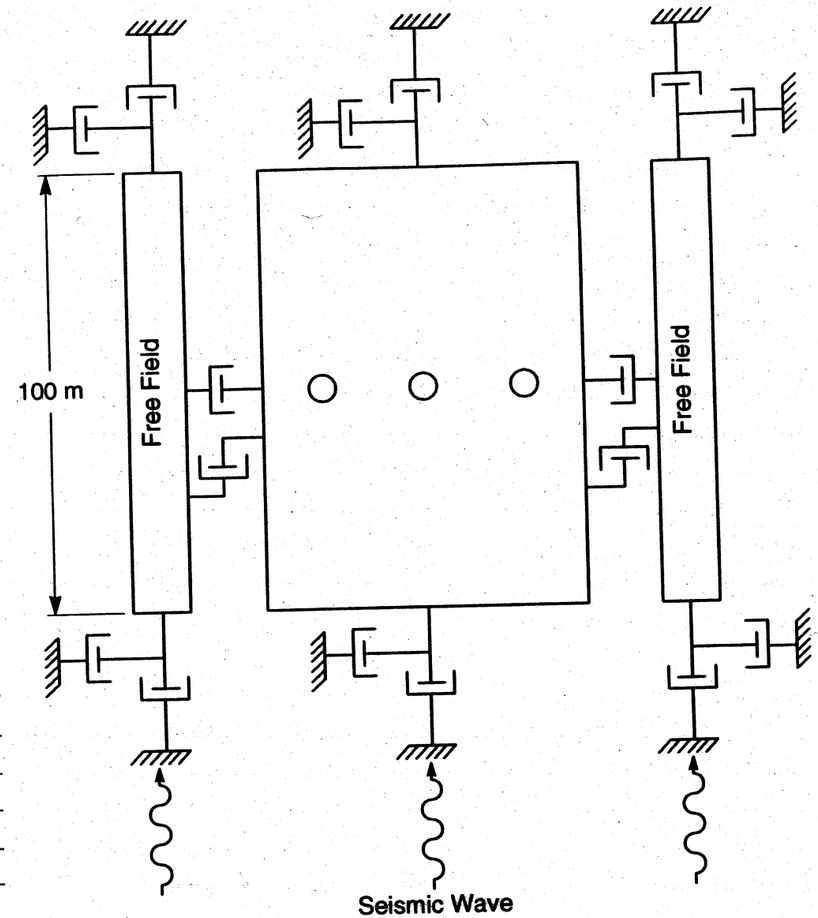

Boundary Conditions for shear wave (s-wave) input. Joints not plotted.

the input velocity of the wave is the same for either a compressive or shear wave corresponding to a particular peak acceleration earthquake. The adjacent page shows the velocity and displacement corresponding to a 0.4 g peak acceleration.
However, since we are applying the acceleration as a stress wave, the input dynamic stress will be different for the compressive and shear motions. For the compressive wave the normal stress (σ_n) will be:

$$\sigma_n = 2(\rho C_p) V_n \quad \text{where } C_p = \sqrt{\frac{K + \frac{4G}{3}}{\rho}}$$

ρ = density
K = bulk modulus
G = shear modulus.

For the shear wave motion, the applied shear stress (σ_s) will be:

$$\sigma_s = 2(\rho C_s) V_s \quad \text{where } C_s = \sqrt{\frac{G}{\rho}}$$

V_s and V_n are the same velocity shown on adjacent page.

MA.
5/10/97

0.4 g Peak acceleration earthquake

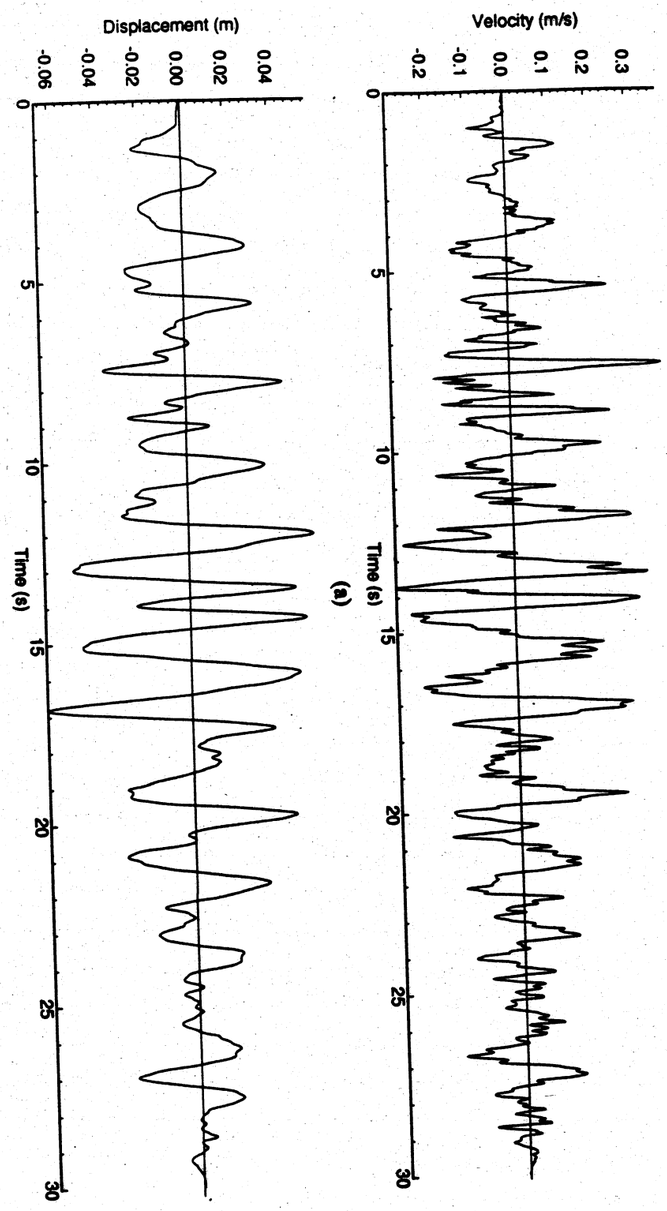

For the final runs, two cases were chosen from the Phase I TM parametric study. These two cases have been denoted Case A and Case B. The properties are shown on the adjacent page. Since both Case A and B have the same joint orientations and spacings, one additional model denoted Case B1 was set up which was the same as Case B with a lower vertical joint orientation (i.e., 70° vs 80° from horizontal). This was meant to get some idea of the effect of joint orientation on dynamic response.

MA
5/21/97

Input Rock and Joint Properties for Final Runs

Parameters	Case A	Case B
Young's Modulus (GPa)	16.0	32.0
Poisson's Ratio	0.21	0.21
Density (Kg/m^3)	2270.0	2270.0
Rock Friction Angle (deg)	50.0	20.0
Rock Cohesion (MPa)	18.0	18.0
Thermal Expansion Coeff. (K^{-1})	12.0×10^{-6}	12.0×10^{-6}
Near-Field Subvertical Joint Orientation (deg)	85.0	85.0
Near-field Subhorizontal Joint Orientation (deg)	10.0	10.0
Near-field Subvertical Joint Spacing (m)	0.5	0.5
Near-field Subhorizontal Joint Spacing (m)	1.0	1.0
Joint Friction Angle (deg)	38.0	28.0
Joint Cohesion (MPa)	0.08	0.08
Joint Tensile Strength (MPa)	0.04	0.04

The matrix of final dynamic runs is shown on adjacent page. Only a limited number could be run due to the runtime constraints. Each run consisted of two repeated dynamic motions at the same amplitude. The majority of the runs consisted of shear waves as they are more damaging and realistic. All final runs were made with Version 3.0 of UDEC, as the previous 2.01 Version did not have all the necessary features needed with regard to free-field boundaries. Additional discussion and the full set of results are documented in the CNWRA June 1997 report titled "Parametric Study of Drift Stability in Jointed Rock Mass - Phase II Discrete Element Dynamic Analyses of unbackfilled Drifts." The thermal mechanical portion of the modeling was verified for correctness in a previous report in series titled CNWRA 96-609 "A parametric Study of Drift Stability in Jointed Rock Mass - Phase I: Discrete Element Thermal-Mechanical Analyses of unbackfilled drifts." Although in the Phase II analyses, the thermomechanical analyses was revised to include 3 drifts, the temperatures were compared and found to be acceptable with earlier Phase I analysis. The was no real way to verify the dynamic results. / ~~A~~ MA. However, for the UDEC Version 3.0

Matrix of Final Set of Dynamic Runs

		Peak Underground Acceleration	Case No.		
			Case A	Case B	Case B1
Excavation Stage		0.4g	—	Shear Wave	Shear Wave
Thermal Loading Stage (100 yr)		0.2g	Shear Wave	Shear Wave	—
		0.3g	—	Shear Wave Compression Wave	Shear Wave
		0.4g	Shear wave	Shear Wave	—

installation test consisting of a dynamic verification test (i.e., harmonic shear wave) was run and compared with results in UDEC Version 3.0 Vol II User's Manual. Results were identical. Note: The UDEC Version 3.0 for all runs was compiled on a Sun Sparc 10 workstation running SunOS. Prior to the final runs, detailed step by step approach to set up final runs was taken to assure that the dynamic results were reasonable as discussed in corresponding scientific notebook # 179.

All results (i.e., input data files, restart files, etc.) were copied to an 8mm tape title "UDEC Version 3.0 (Emplacement Drift Dynamic Study) Project #20-5708-761

Command used to copy files was.

tar -cvf /dev/rst0 verify

device name for tape drive — main directory containing udec results for all runs;

To Extract files type

tar -xvf /dev/rst0 verify

tape drive device name. — subdirectory name.

On the tape, the main directory is called "Verify" which contains the following subdirectories.

dyn2a-tmj3 — Case A (0.2g shear wave, 100 yr TM state)

dyn2a-tmj4 — Case A (0.4g shear wave, 100 yr TM state)

dyn3a-tmj3 — Case B (0.2g shear wave, 100 yr TM state)

dyn3a-tmj4 — Case B (0.4g " " ")

dyn3a-tmj7 — Case B (0.3g " " ")

dyn4b-exj4 — Case B1 (0.4g shear wave, Excavation Loading Only)

dyn3a-tmj4p — Case B (0.3g compression wave, 100 TM state)

MA
5/25/97

The work for this project has been completed and this notebook is closed out to any further entries.

Michael Ahnle
5/23/97

I have reviewed this scientific notebook and find that it adequately summarizes the set of input data files used in UDEC 3.0 runs for the Drift Stability Analysis. There is an absence of units on the listing of input files and on the Equation on p. 26. The lack of units on the input data file may be documented in the companion scientific notebook #179. Also, it is unclear why only one datafile is captured in the notebook while several others are saved on the accompanying tape. It must be assumed that the results for the other data files is also contained in notebook #179.

R G Bruce 5/26/97
EM/DA

Following additional information added per technical reviewer of final seismic report as part of verification of calculations.

Table 2-1. Input rock and joint parameters for the dynamic study

Parameters (1)	Case A	Case B
Young's Modulus (GPa)	16.0	32.0
Poisson's Ratio	0.21	0.21
Rock Friction Angle (deg)	50.0	20.0
Rock Cohesion (MPa)	18.0	18.0
Thermal Expansion Coeff. (K^{-1})	12.0×10^{-6}	12.0×10^{-6}
Near-field Subvertical Joint Orientation (deg)	85.0	85.0
Near-field Subhorizontal Joint Orientation (deg)	10.0	10.0
Near-field Subvertical Joint Spacing (m)	0.5	0.5
Near-field Subhorizontal Joint Spacing (m)	1.0	1.0
Joint Friction Angle (deg)	38.0	28.0
Joint Cohesion (MPa)	0.08	0.08
Joint Tensile Strength (MPa)	0.04	0.04
Rock Tensile Strength (MPa)	5.0	5.0
Rock Density (kg/m^3)	2297.0	2297.0
Joint Normal and Shear Stiffnesses (MPa/m)	1.0×0^5	1.0×10^5
Thermal Conductivity (W/m-K)	2.1	2.1
Specific Heat (J/kg-K)	932.0	932.0

(1) Note: Material properties were chosen based on upper and lower bounds in DOE's Reference Information Base [U.S. DOE. 1994 Reference Information Base, (RIB), Yucca Mtn. Site Characterization Project. Washington, DC: U.S. Department of Energy].

Typical final input file for one of the dynamic UDEC runs.

UDEC Input File

dyn3a_tmj4.dat

```
set plot po
*****************************************************************
*
*  Case B (0.4g shear wave)
*  Three tunnel model under thermal-mechanical loading followed by
*  Vertically propagating shear wave (with joints)
*  Viscous boundaries at top of model (no wave reflection from ground surface)
*  Free-field boundaries applied after thermal loading, since the thermal
*  stress was not correct when free-field boundaries were applied before
* the thermal loading
*
*** Joint orientations ***
* 1st joint set -  10 degrees ccw from horizontal  - 1.25 m spacing
* 2nd joint set -  85 degrees ccw from horizontal  - 0.50 m spacing
*****************************************************************
start
head
Case B - thermal-mechanical-seismic analysis (0.4g)
config thermal
prop mat=1 kn=1.0e5 ks=1.0e5 jkn=1.0e5 jks=1.0e5 jcoh=0.08 jtens=0.04 &
jdil=0.0 jfric=28.0
prop mat=5 d=0.002297 k=1.8391e4 g=1.3223e4 coh=18.0 fric=20.0 tens=20.0 &
dil=0.0
* note - necessary to increase intact rock tensile strength to eliminate failure
* of intact rock in tension during the dynamic, unsupported drift simulation
prop mat=5 kn=1.0e5 ks=1.0e5 jkn=1.0e5 jks=1.0e5
prop mat=5 cond=2.1 thexp=12.0e-6 spec=9.32e8
*
* artificial joint properties
*
prop jmat=2 jkn=1.0e5 jks=1.0e5 jcoh=1.0e10 jten=1.0e10 kn=1.0e5 &
ks=1.0e5
round 0.025
set ovtol 1.0
edge 0.1
block -33.75 -300 -33.75 300 33.75 300 33.75 -300
split -35 -50 35 -50
split -35  50 35  50
split -35 100 35  100
split -35 -100 35 -100
split -30 -50 -30 50
split 30 -50 30 50
*
* create jointing
*
jregion -25 -50 -25 50 25 50 25 -50
jset 85.0 0.0 100.0 0.0 0.0 0.0 12.0 0.0 -20 -22
jregion -30 -30 -30 30 30 40 30 -20
jset 10.0 0.0 50.0 0.0 0.0 0.0 15.0 0.0 -20 -22
*
```

```
del ann 22.5 0 0 2.5
del ann -22.5 0 0 2.5
*
reset hist time dis
hist ncyc=10
hist ydis 0 2.5 yvel 0 2.5 syy 2.5 0 sxx 0 2.5
cycle 1500
save dyn3a_tmj3_exc.sav
*
*************************************************************************
* Thermal mechanical analysis
*************************************************************************
*
* apply decaying heat flux to tunnel wall boundary
*
*************************************************************************
*
* set up thermal boundaries (default thermal b.c. are adiabatic)
*
*  Initial temperature at repository horizon taken to be 29 C
*  - temperature gradient taken to be 0.02 deg C/m
*
*  UDEC doesn't allow user to set up an initial in situ temperature gradient,
*  and as a result, the initem command is used repeatedely to set temperature
*  gradient manually along the vertical nodes.
*  The initial temperatures are specified to remain fixed along the
*  upper and lower boundaries.
*
initem  35.00  -34.0  34.0  -300.99  -290.99
initem  34.80  -34.0  34.0  -290.99  -280.99
initem  34.60  -34.0  34.0  -280.99  -270.99
initem  34.40  -34.0  34.0  -270.99  -260.99
initem  34.20  -34.0  34.0  -260.99  -250.99
initem  34.00  -34.0  34.0  -250.99  -240.99
initem  33.80  -34.0  34.0  -240.99  -230.99
initem  33.60  -34.0  34.0  -230.99  -220.99
initem  33.40  -34.0  34.0  -220.99  -210.99
initem  33.20  -34.0  34.0  -210.99  -200.99
initem  33.00  -34.0  34.0  -200.99  -190.99
initem  32.80  -34.0  34.0  -190.99  -180.99
initem  32.60  -34.0  34.0  -180.99  -170.99
initem  32.40  -34.0  34.0  -170.99  -160.99
initem  32.20  -34.0  34.0  -160.99  -150.99
initem  32.00  -34.0  34.0  -150.99  -140.99
initem  31.80  -34.0  34.0  -140.99  -130.99
initem  31.60  -34.0  34.0  -130.99  -120.99
initem  31.40  -34.0  34.0  -120.99  -110.99
initem  31.20  -34.0  34.0  -110.99  -100.99
initem  31.00  -34.0  34.0  -100.99  -90.99
initem  30.80  -34.0  34.0  -90.99  -80.99
```



```
initem  30.60  -34.0  34.0  -80.99  -70.99
initem  30.40  -34.0  34.0  -70.99  -60.99
initem  30.20  -34.0  34.0  -60.99  -50.99
initem  30.00  -34.0  34.0  -50.99  -45.99
initem  29.90  -34.0  34.0  -45.99  -40.99
initem  29.80  -34.0  34.0  -40.99  -35.99
initem  29.70  -34.0  34.0  -35.99  -30.99
initem  29.60  -34.0  34.0  -30.99  -25.99
initem  29.50  -34.0  34.0  -25.99  -24.99
initem  29.00  -34.0  34.0  -24.99  24.99
initem  28.50  -34.0  34.0  24.99  25.99
initem  28.40  -34.0  34.0  25.99  30.99
initem  28.30  -34.0  34.0  30.99  35.99
initem  28.20  -34.0  34.0  35.99  40.99
initem  28.10  -34.0  34.0  40.99  45.99
initem  28.00  -34.0  34.0  45.99  50.99
initem  27.80  -34.0  34.0  50.99  60.99
initem  27.60  -34.0  34.0  60.99  70.99
initem  27.40  -34.0  34.0  70.99  80.99
initem  27.20  -34.0  34.0  80.99  90.99
initem  27.00  -34.0  34.0  90.99  100.99
initem  26.80  -34.0  34.0  100.99  110.99
initem  26.60  -34.0  34.0  110.99  120.99
initem  26.40  -34.0  34.0  120.99  130.99
initem  26.20  -34.0  34.0  130.99  140.99
initem  26.00  -34.0  34.0  140.99  150.99
initem  25.80  -34.0  34.0  150.99  160.99
initem  25.60  -34.0  34.0  160.99  170.99
initem  25.40  -34.0  34.0  170.99  180.99
initem  25.20  -34.0  34.0  180.99  190.99
initem  25.00  -34.0  34.0  190.99  200.99
initem  24.80  -34.0  34.0  200.99  210.99
initem  24.60  -34.0  34.0  210.99  220.99
initem  24.40  -34.0  34.0  220.99  230.99
initem  24.20  -34.0  34.0  230.99  240.99
initem  24.00  -34.0  34.0  240.99  250.99
initem  23.80  -34.0  34.0  250.99  260.99
initem  23.60  -34.0  34.0  260.99  270.99
initem  23.40  -34.0  34.0  270.99  280.99
initem  23.20  -34.0  34.0  280.99  290.99
initem  23.00  -34.0  34.0  290.99  300.99
*
* fix top and bottom boundary temperatures
*
tfix    23.00  range -34.0 34.0  299.0  301.0
tfix    35.00  range -34.0 34.0  -301.0 -299.0
*
print bound
reset time
*
```

```
thist ntcyc=10 tem 0 2.5 tem 0 5 tem 0 10 tem 0 25 tem 0 50 tem 0 100
thist tem 0 150 tem 0 200 tem 0 300 tem 2.5 0 tem 5 0 tem 10 0
thist tem 11.25 0
thist tem 22.5 2.5 tem -22.5 2.5
*
* apply heat flux to tunnel walls
*
thapp ann   0.0 0.0 2.4 2.56 flux 28.4701 -3.2197e-10
thapp ann  22.5 0.0 2.4 2.56 flux 28.4701 -3.2197e-10
thapp ann -22.5 0.0 2.4 2.56 flux 28.4701 -3.2197e-10
*
* run thermal time to 1 week
*
run age=6.048e5 temp=10000  step=1000000 tol=0.05
reset damp
cycle 3500
*
* run thermal time to 1 month
*
run age=2.592e6 temp=10000 step=1000000 tol=0.05
reset damp
cycle 3500
*
* run thermal time to 3 months
*
run age=7.776e6 delt=3600.0  temp=10000 step=1000000 tol=0.05 impl
reset damp
cycle 3500
*
* run thermal time to 6 months
*
run age=1.5552e7 delt=3600.0  temp=10000 step=1000000 tol=0.05 impl
reset damp
cycle 3500
*
* run thermal time to 9 months
*
run age=2.3328e7 delt=7200.0  temp=10000 step=1000000 tol=0.05 impl
reset damp
cycle 3500
*
* run thermal time to 1 year
*
run age=3.1536e7 delt=1.08e4  temp=10000 step=1000000 tol=0.05 impl
reset damp
cycle 3500
*
* run thermal time to 18 months
*
run age=4.7304e7 delt=2.16e4  temp=10000 step=1000000 tol=0.05 impl
```



```
reset damp
cycle 7500
*
* run thermal time to 2 years
*
run age=6.3072e7 delt=8.64e4  temp=10000 step=1000000 tol=0.05 impl
reset damp
cycle 7500
*
* run thermal time to 3 years
*
run age=9.4608e7 delt=8.64e4  temp=10000 step=1000000 tol=0.05 impl
reset damp
cycle 7500
*
* run thermal time to 4 years
*
run age=1.26144e8 delt=8.64e4  temp=10000 step=1000000 tol=0.05 impl
reset damp
cycle 7500
*
* run thermal time to 5 years
*
run age=1.5768e8 delt=8.64e4  temp=10000 step=1000000 tol=0.05 impl
reset damp
cycle 7500
*
* run thermal time to 7.5 years
*
run age=2.3652e8 delt=8.64e4 temp=10000 step=1000000 tol=0.05 impl
reset damp
cycle 7500
*
* run thermal time to 10 years
*
run age=3.1536e8 delt=8.64e4 temp=10000 step=1000000 tol=0.05 impl
reset damp
cycle 7500
sav dyn3a_tmj3_10yr.sav
*
* run thermal time to 15 years
*
run age=4.7304e8 delt=8.64e4 temp=10000 step=1000000 tol=0.05 impl
reset damp
cycle 7500
*
* run thermal time to 20 years
*
run age=6.3072e8 delt=8.64e4 temp=10000 step=1000000 tol=0.05 impl
reset damp
```

```
cycle 7500
*
* run thermal time to 30 years
*
run age=9.4608e8 delt=8.64e4 temp=10000 step=1000000 tol=0.05 impl
reset damp
cycle 7500
save dyn3a_tmj3_30yr.sav
*
* run thermal time to 40 years
*
run age=1.26144e9 delt=8.64e4 temp=10000 step=1000000 tol=0.05 impl
reset damp
cycle 7500
pr max
*
* run thermal time to 50 years
*
run age=1.5768e9 delt=8.64e4 temp=10000 step=1000000 tol=0.05 impl
reset damp
cycle 7500
sav dyn3a_tmj3_50yr.sav
*
* run thermal time to 75  years
*
run age=2.3652e9 delt=8.64e4 temp=10000 step=1000000 tol=0.05 impl
reset damp
cycle 8000
*
* run thermal time to 100  years
*
run age=3.1536e9 delt=8.64e4 temp=10000 step=1000000 tol=0.05 impl
reset damp
cycle 8000
save dyn3a_tmj3_100yr.sav
*
*
* delete upper and lower portions of mesh for dynamic analysis
*
del region -35 50 -35 300 35 300 35 50
del region -35 -300 -35 -50 35 -50 35 -300
*
bound -35 35 49 51 xvel 0 yvel 0
bound -35 35 -51 -49 xvel 0 yvel 0
*
hist unbal
cyc 100
*
*************************************************************************
* Replace lateral boundaries with free-field boundaries for start of
```



```
* dynamic analysis
*************************************************************************
*
* generate free-field (100 nodes)
*
ffield gen yrange (-52,52) np 100
ffield change mat=5 cons=3
*
* initialize FF stresses to insitu stress state
*
ffield ini sxx -3.5 0.011666
ffield ini szz -3.5 0.011666
ffield ini syy -7.0 0.023333
*
* fix bottom
ffield base xvel=0
ffield base yvel=0
*
* apply boundary stresses at top
ffield top syy -5.833
*
* cycle with FF not applied to grid
* to verify that FF stresses are in equilibrium
*
reset time hist dis
hist n 50
hist ffyd 50 1
hist ffxd 50 1
hist ffyd 50 2
hist ffxd 50 2
hist ffsyy 0 1
hist ffsxx 0 1
hist ffsyy 0 2
hist ffsxx 0 2
hist ffyv  0 1
hist ffyv  0 2
hist ffxd  0 1
hist ffxv  0 1
hist sxx -33 0 syy -33 0 xdis -33 0 xvel -33 0
cycle 1500
save dyn3a_tmj3_ff.sav
*
* Link free field mesh to main mesh
*
bound mat=5
bound ff range -35,-33 -52,52
bound ff range 33,35 -52,52
cycle 1000
save dyn3a_tmj3_ff1.sav
*
```

```
* del falling blocks from thermal analysis
*
del bl 100510
del bl 99194
del bl 100319
del bl 99569
del bl 86442
*
* increase joint shear strengths along subhorizontal joint segments near outer lateral
* boundaries due to low joint strength properties for Case B to eliminate shearing
* across entire model and unrealistic results.
*
change region -34 -50 -34 50 -30 50 -30 -50 jmat=2
change region 30 -50 30 50 34 50 34 -50 jmat=2
*
*******************************************************
* Dynamic analysis
* 0.4 g shear wave applied as a stress wave to base
*******************************************************
*
* create viscous boundaries at base
*
bound xvisc range -50,50 -51,-49
*
* apply shear wave as a stress bc (sxy) corresponding to 0.4 g earthquake
*
bound hread 1 velm04rep.vel
bound hist 1
bound -50,50 -51,-49 stress 0 -11.022 0 hist=1
*
* fix yvelocity at bottom
bound yvel=0 range -50,50 -51,-49
*
* apply boundary conditions at base of free field
*
ffield base sxy=-11.022 hist=1
ffield base xvisc
ffield base yvel=0
*
* assume non-reflective boundary at top surface
*
bound -50,50  49,51 xvisc yvisc
ffield top xvisc yvisc
*
reset time hist dis
hist n=100 sxy 0,-50 sxy 0,50 type=1
hist xvel 0 -50 xvel 0 -2.5 xvel 0 50 xdis 0 -50 xdis 0 50 ydis 0 2.5
hist ffxdis 0 1 ffxdis 0 2
hist ffxvel 0 1 ffxvel 0 2 ffxvel -50 1 ffxvel -50 2
hist xacc 0 -50 xacc 0 -2.5 xacc 0 50
```



```
* histories for relative shear displacements
* floor
hist sdis 112616
* roof
hist sdis 109361 sdis 109018 sdis 108912
* left wall
hist sdis 91034
* right wall
hist sdis 101093 sdis 86633
*
damp 0.001 1
mscale part 7.5e-5
cyc 0
pr state
*
cycle time=10.0
save dyn3a_tmj4_10s.sav
cycle time=10.0
save dyn3a_tmj4_20s.sav
cycle time=10.0
save dyn3a_tmj4_30s.sav
cycle time=5.0
save dyn3a_tmj4_35s.sav
cycle time=10.0
save dyn3a_tmj4_45s.sav
cycle time=10.0
save dyn3a_tmj4_55s.sav
cycle time=10.0
save dyn3a_tmj4_65s.sav
cycle time=5.0
save dyn3a_tmj4_70s.sav
ret
```

MA
6/19/97

UDEC Printout for verification of correct input of Material (block and point) properties.

property blocks:	mat=01	mat=02	mat=03	mat=04	mat=05
dens	0.000E+00	0.000E+00	0.000E+00	0.000E+00	2.297E-03
bulk	0.000E+00	0.000E+00	0.000E+00	0.000E+00	1.839E+04
shear	0.000E+00	0.000E+00	0.000E+00	0.000E+00	1.322E+04
el.mod.	0.000E+00	0.000E+00	0.000E+00	0.000E+00	3.200E+04
P.ratio	0.000E+00	0.000E+00	0.000E+00	0.000E+00	2.100E-01
fric	0.000E+00	0.000E+00	0.000E+00	0.000E+00	2.000E+01
coh	0.000E+00	0.000E+00	0.000E+00	0.000E+00	1.800E+01
dilat	0.000E+00	0.000E+00	0.000E+00	0.000E+00	0.000E+00
tens	0.000E+00	0.000E+00	0.000E+00	0.000E+00	2.000E+01
ucs	0.000E+00	0.000E+00	0.000E+00	0.000E+00	0.000E+00
hbm	0.000E+00	0.000E+00	0.000E+00	0.000E+00	0.000E+00
hbs	0.000E+00	0.000E+00	0.000E+00	0.000E+00	0.000E+00

property blocks:	mat=06	mat=07	mat=08	mat=09	mat=10
dens	0.000E+00	0.000E+00	0.000E+00	0.000E+00	0.000E+00
bulk	0.000E+00	0.000E+00	0.000E+00	0.000E+00	0.000E+00
shear	0.000E+00	0.000E+00	0.000E+00	0.000E+00	0.000E+00
el.mod.	0.000E+00	0.000E+00	0.000E+00	0.000E+00	0.000E+00
P.ratio	0.000E+00	0.000E+00	0.000E+00	0.000E+00	0.000E+00
fric	0.000E+00	0.000E+00	0.000E+00	0.000E+00	0.000E+00
coh	0.000E+00	0.000E+00	0.000E+00	0.000E+00	0.000E+00
dilat	0.000E+00	0.000E+00	0.000E+00	0.000E+00	0.000E+00
tens	0.000E+00	0.000E+00	0.000E+00	0.000E+00	0.000E+00
ucs	0.000E+00	0.000E+00	0.000E+00	0.000E+00	0.000E+00
hbm	0.000E+00	0.000E+00	0.000E+00	0.000E+00	0.000E+00
hbs	0.000E+00	0.000E+00	0.000E+00	0.000E+00	0.000E+00

property blocks:	mat=11	mat=12	mat=13	mat=14	mat=15
dens	0.000E+00	0.000E+00	0.000E+00	0.000E+00	0.000E+00
bulk	0.000E+00	0.000E+00	0.000E+00	0.000E+00	0.000E+00
shear	0.000E+00	0.000E+00	0.000E+00	0.000E+00	0.000E+00
el.mod.	0.000E+00	0.000E+00	0.000E+00	0.000E+00	0.000E+00
P.ratio	0.000E+00	0.000E+00	0.000E+00	0.000E+00	0.000E+00
fric	0.000E+00	0.000E+00	0.000E+00	0.000E+00	0.000E+00
coh	0.000E+00	0.000E+00	0.000E+00	0.000E+00	0.000E+00
dilat	0.000E+00	0.000E+00	0.000E+00	0.000E+00	0.000E+00
tens	0.000E+00	0.000E+00	0.000E+00	0.000E+00	0.000E+00
ucs	0.000E+00	0.000E+00	0.000E+00	0.000E+00	0.000E+00
hbm	0.000E+00	0.000E+00	0.000E+00	0.000E+00	0.000E+00
hbs	0.000E+00	0.000E+00	0.000E+00	0.000E+00	0.000E+00

property blocks:	mat=16	mat=17	mat=18	mat=19	mat=20
dens	0.000E+00	0.000E+00	0.000E+00	0.000E+00	0.000E+00
bulk	0.000E+00	0.000E+00	0.000E+00	0.000E+00	0.000E+00
shear	0.000E+00	0.000E+00	0.000E+00	0.000E+00	0.000E+00
el.mod.	0.000E+00	0.000E+00	0.000E+00	0.000E+00	0.000E+00
P.ratio	0.000E+00	0.000E+00	0.000E+00	0.000E+00	0.000E+00
fric	0.000E+00	0.000E+00	0.000E+00	0.000E+00	0.000E+00
coh	0.000E+00	0.000E+00	0.000E+00	0.000E+00	0.000E+00
dilat	0.000E+00	0.000E+00	0.000E+00	0.000E+00	0.000E+00
tens	0.000E+00	0.000E+00	0.000E+00	0.000E+00	0.000E+00
ucs	0.000E+00	0.000E+00	0.000E+00	0.000E+00	0.000E+00
hbm	0.000E+00	0.000E+00	0.000E+00	0.000E+00	0.000E+00
hbs	0.000E+00	0.000E+00	0.000E+00	0.000E+00	0.000E+00

property joints:	mat=01	mat=02	mat=03	mat=04	mat=05
jkn	1.000E+05	1.000E+05	0.000E+00	0.000E+00	1.000E+05
jks	1.000E+05	1.000E+05	0.000E+00	0.000E+00	1.000E+05
jfric	2.800E+01	0.000E+00	0.000E+00	0.000E+00	0.000E+00
jcoh	8.000E-02	1.000E+10	0.000E+00	0.000E+00	0.000E+00
jdil	0.000E+00	0.000E+00	0.000E+00	0.000E+00	0.000E+00
jtens	4.000E-02	1.000E+10	0.000E+00	0.000E+00	0.000E+00
zdil	0.000E+00	0.000E+00	0.000E+00	0.000E+00	0.000E+00
jrfric, jc=5	0.000E+00	0.000E+00	0.000E+00	0.000E+00	0.000E+00
jrescoh,jc=5	0.000E+00	0.000E+00	0.000E+00	0.000E+00	0.000E+00
jrtens, jc=5	0.000E+00	0.000E+00	0.000E+00	0.000E+00	0.000E+00
nstable	0	0	0	0	0
ktable	0	0	0	0	0
add_dil	off				

property joints:	mat=06	mat=07	mat=08	mat=09	mat=10
jkn	0.000E+00	0.000E+00	0.000E+00	0.000E+00	0.000E+00
jks	0.000E+00	0.000E+00	0.000E+00	0.000E+00	0.000E+00
jfric	0.000E+00	0.000E+00	0.000E+00	0.000E+00	0.000E+00
jcoh	0.000E+00	0.000E+00	0.000E+00	0.000E+00	0.000E+00
jdil	0.000E+00	0.000E+00	0.000E+00	0.000E+00	0.000E+00
jtens	0.000E+00	0.000E+00	0.000E+00	0.000E+00	0.000E+00
zdil	0.000E+00	0.000E+00	0.000E+00	0.000E+00	0.000E+00
jrfric, jc=5	0.000E+00	0.000E+00	0.000E+00	0.000E+00	0.000E+00
jrescoh,jc=5	0.000E+00	0.000E+00	0.000E+00	0.000E+00	0.000E+00
jrtens, jc=5	0.000E+00	0.000E+00	0.000E+00	0.000E+00	0.000E+00
nstable	0	0	0	0	0
ktable	0	0	0	0	0
add_dil	off				

property joints:	mat=11	mat=12	mat=13	mat=14	mat=15
jkn	0.000E+00	0.000E+00	0.000E+00	0.000E+00	0.000E+00
jks	0.000E+00	0.000E+00	0.000E+00	0.000E+00	0.000E+00
jfric	0.000E+00	0.000E+00	0.000E+00	0.000E+00	0.000E+00
jcoh	0.000E+00	0.000E+00	0.000E+00	0.000E+00	0.000E+00
jdil	0.000E+00	0.000E+00	0.000E+00	0.000E+00	0.000E+00
jtens	0.000E+00	0.000E+00	0.000E+00	0.000E+00	0.000E+00
zdil	0.000E+00	0.000E+00	0.000E+00	0.000E+00	0.000E+00
jrfric, jc=5	0.000E+00	0.000E+00	0.000E+00	0.000E+00	0.000E+00
jrescoh,jc=5	0.000E+00	0.000E+00	0.000E+00	0.000E+00	0.000E+00
jrtens, jc=5	0.000E+00	0.000E+00	0.000E+00	0.000E+00	0.000E+00
nstable	0	0	0	0	0
ktable	0	0	0	0	0
add_dil	off				

property joints:	mat=16	mat=17	mat=18	mat=19	mat=20
jkn	0.000E+00	0.000E+00	0.000E+00	0.000E+00	0.000E+00
jks	0.000E+00	0.000E+00	0.000E+00	0.000E+00	0.000E+00
jfric	0.000E+00	0.000E+00	0.000E+00	0.000E+00	0.000E+00
jcoh	0.000E+00	0.000E+00	0.000E+00	0.000E+00	0.000E+00
jdil	0.000E+00	0.000E+00	0.000E+00	0.000E+00	0.000E+00
jtens	0.000E+00	0.000E+00	0.000E+00	0.000E+00	0.000E+00
zdil	0.000E+00	0.000E+00	0.000E+00	0.000E+00	0.000E+00
jrfric, jc=5	0.000E+00	0.000E+00	0.000E+00	0.000E+00	0.000E+00
jrescoh,jc=5	0.000E+00	0.000E+00	0.000E+00	0.000E+00	0.000E+00

MA 6/19/97

ADDITIONAL INFORMATION FOR SCIENTIFIC NOTEBOOK #: 206

Document Date:	01/16/1997
Availability:	Southwest Research Institute® Center for Nuclear Waste Regulatory Analyses 6220 Culebra Road San Antonio, Texas 78228
Contact:	Southwest Research Institute® Center for Nuclear Waste Regulatory Analyses 6220 Culebra Road San Antonio, TX 78228-5166 Attn.: Director of Administration 210.522.5054
Data Sensitivity:	■"Non-Sensitive" □ Sensitive □"Non-Sensitive - Copyright" □ Sensitive - Copyright
Date Generated:	1997
Operating System: (including version number)	UNIX/SUN OS
Application Used: (including version number)	UDEC, Version 3.0
Media Type: (CDs, 3 1/2, 5 1/4 disks, etc.)	1 Tape
File Types: (.exe, .bat, .zip, etc.)	Various
Remarks: (computer runs, etc.)	Media contains: Data files for the emplacement drift dynamic study with thermal-mechanical loading.