encl. to 9/21/87 ltr.

CONTROLLED DOCUMENT

UNCONTROLLED DOCUMENT

Operation Procedures

for

BFEC Mass Spectrometer System

~~Revision No. 001~~

Bendix Field Engineering Corporation

P.O. Box 1569, Grand Junction, CO

8712040482

Table of Contents

	Page	Date	Rev. No.
Introduction	1	8-17-84	00
01 Calibration for Discrimination or Abundance	2	8-17-84	00
02 Sample Analysis	5	3-10-86	01
03 Separation of Gas Phase from Fluid Samples	9	8-17-84	00
04 Rock Sample Analysis	11	1-16-86	01
05 Data Acquisition Using the HP9825	18	8-17-84	00
06 Transfer of Data (HP9825 to HP2648)	20	8-17-84	00
07 Transfer of Data (HP2648 to HP1000)	23	8-17-84	00
08 Processing Data Files (CHOMP, manual)	25	8-17-84	00
09 Processing Data Files (CHOMP, batch)	27	8-17-84	00
010 Processing Data Files (FILER)	29	8-17-84	00
011 Sample Handling and Documentation	31	8-17-84	00
012 Program Protection and Change Control	38	8-17-84	00
Appendix A - Spectrometer System	40	8-17-84	00
Appendix B - Nomenclature	41	8-17-84	00
Appendix C - References	46	8-17-84	00
Appendix D - CHOMP Options	47	8-17-84	00
Appendix E - Naming Conventions	49	8-17-84	00
Appendix F - Function Keys on the HP9825	51	8-17-84	00
Appendix G - Handling of BWIP Records	52a	3-10-86	00
Table 1 Mass Spectrometer Log Book	53	8-17-84	00

Figures

		Page
Figure 1	Schematic of Sample Processing from Gas Phase to Report	1
Figure 1a	Schematic of System for Doing All Five Gases	8c
Figure 2	Blank Actual Condition Sheet - RF	14
Figure 2a	Blank Actual Condition Sheet - LTRF	14a
Figure 3	Sample Actual Condition Sheet - RF	17
Figure 3a	Sample Actual Condition Sheet - LTRF	17a
Figure 4	Switching Boxes for HP9825 and HP2648	22
Figure 5	HP2648 Terminal Keyboard	24
Figure 6	HP2631A Printer Front Switch Panel	26
Figure 7	Chain of Sample Custody Form	32
Figure 8	Sample History Document	33
Figure 9	Page from Sample Inventory Catalog	34
Figure 10	Sample Ticket	35
Figure 11	Neon Analysis Form	45

UNCONTROLLED DOCUMENT

The above procedures have been reviewed and approved by the following:

Charles Jones, Charles Jones Date 13 March 1986
CRWM Division Director

W. A. Girdley, W. A. Girdley Date 3-13-86
Assistant General Manager, Projects

Donna Riddle, Donna J. Riddle Date 13 March 1986
Quality Assurance Coordinator

INTRODUCTION

The BFEC Nuclide Mass Spectrometer is used to analyze samples for the isotopic composition of gases with automated data aquisition and reduction of He, Ne, Ar, Kr and Xe. The mass spectrometer can be operated in a manual mode or driven by a HP9825 computer. Raw data from computer runs is stored on cassette tape by the HP9825 for later transfer to the HP-1000 computer for data reduction using CHOMP and FILER. The reduced data undergo futher manual calculations to arrive at data values that may appear in ONWI-NWTS reports or other technical papers. A schematic overview of the system is illustrated in Figure 1.

Gas samples are admitted to the sample handling system (see appendix A) and expanded to various parts of the system. Samples may be analyzed directly or may be mixed with an isotope dilution spike before analysis. The options are many and varied.

The overall objectives of this type of analysis are described in publications by Reynolds (1956), Dalrymple and Lanphere (1969), Podosek (1970), Schaeffer and Zahringer (1966), and Zaikowski and Schaeffer (1979). Particular attention should be paid to the Kirsten (1966) paper in Schaeffer and Zahringer and a paper by Mazor et al (1970). Use of the procedures described herein requires, at a minimum, a rather thorough understanding of the foregoing publications.

Figure 1 Schmatic of Sample Processing from Gas Phase to Report

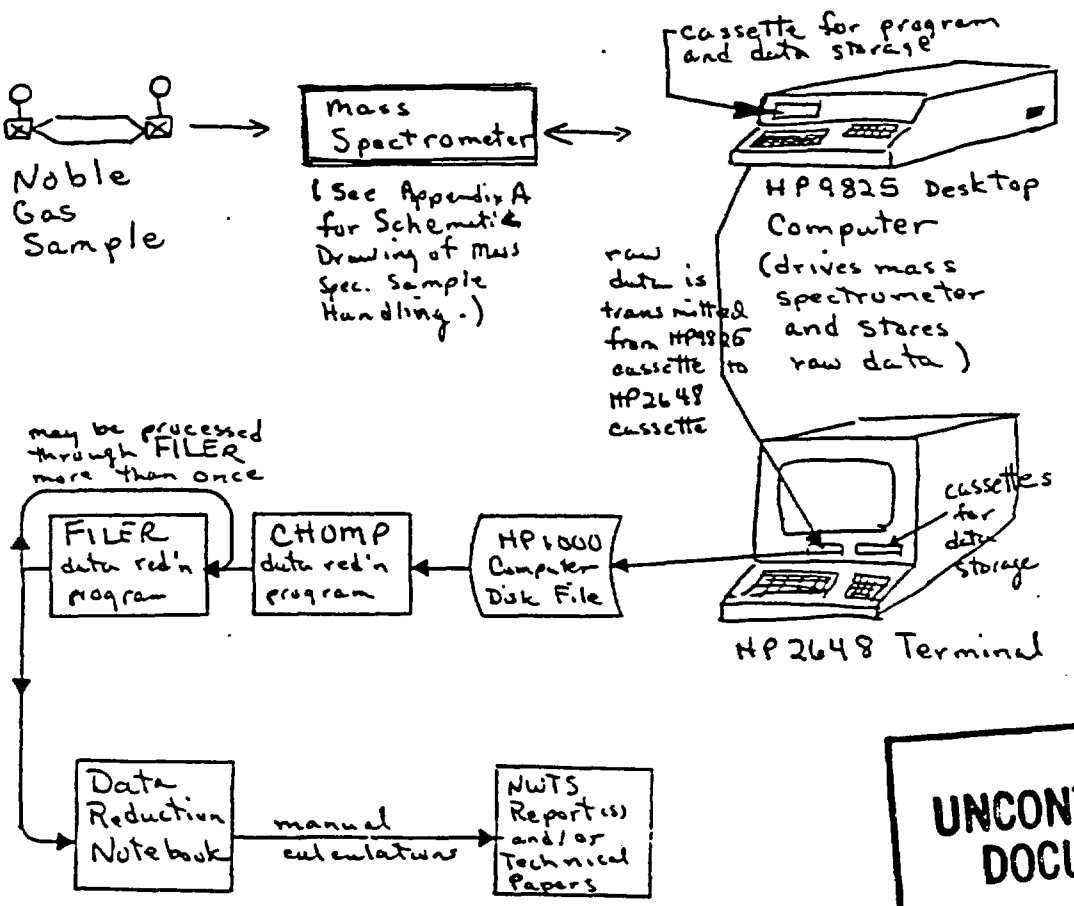

UNCONTROLLED DOCUMENT

01 Calibration for Discrimination or Abundance

1.0 Purpose

The purpose of this procedure is to define the method used for calibration for discrimination or abundance of helium, neon, and argon.

2.0 Definitions

The nomenclature used in this procedure is explained in greater detail in Appendix B.

3.0 Procedures

3.1 Helium

1. Evacuate intervening volume from reservoir
2. Isolate system from pumps (1 min.)
3. Admit aliquot from ^3He - ^4He or ^3He reservoir (2 min.)
4. Record number of aliquots and reservoir in Mass Spectrometer Log Book. (See Table 1 for a list of the items to record.)
5. Install LN_2 on Charcoal Trap No. 2 (10 min.)
6. Isolate the gas in mass spectrometer (2 - 5 min.)
7. Measure helium and/or helium isotopes

3.2 Neon

1. Evacuate aliquot "D"
2. Isolate system from pumps (1 min.)
3. Admit aliquot of air via aliquot "D" (3 - 5 min.)
4. Record pressure from Baratron® or Hg gauge and number of aliquots of "D" in Mass Spectrometer Log Book.
5. Getter to 10V (10 - 15 min.)
6. Getter to 5V; install LN_2 on Charcoal Trap No. 2 (5 min.)
7. Getter off (10 - 20 min.)
8. Isolate the gas in mass spectrometer (2 - 5 min.)
9. Measure neon isotopes with regular or high sensitivity electrometer

UNCONTROLLED DOCUMENT

3.3 Neon - with argon removal

1. Evacuate intervening volume of aliquot "D"
2. Isolate system from pumps (1 min.)
3. Admit aliquot of air via aliquot "D" (3 - 5 min.)
4. Record pressure from Baratron® or Hg gauge and number of aliquots of "D" in the Mass Spectrometer Log Book.
5. Getter to 10V (10 - 15 min.)
6. Getter to 5V; install LN_2 on Charcoal Trap No. 2 (5 min.)
7. Getter off (10 - 20 min.)
8. Isolate gas in V_m
9. Evacuate 1/2 V_{ss} using Ion Pump; remove LN_2 from Charcoal Trap No. 2 (20 - 30 min.)
10. Isolate 1/2 V_{ss} from Ion Pump (1 - 2 min.)
11. Expand gas from V_m to 1/2 V_{ss}, install LN_2 on Charcoal Trap No. 2 (20 min.)
12. Isolate the gas in mass spectrometer (2 - 5 min.)
13. Measure Neon isotopes with regular of high sensitivity electrometer

3.4 Argon

1. Evacuate intervening volume of aliquot "D"
2. Isolate system from pumps (1 min.)
3. Admit aliquot of air via aliquot "D" (2 min.)
4. Record pressure from Baratron® or Hg gauge and number of aliquots of "D" in the Mass Spectrometer Log Book.
5. Getter to 10V (10 - 15 min.)
6. Getter to 5V; install DI on Charcoal Trap No. 2 (5 min.)
7. Store portion of gas in V_1 <u>or</u> isolate full fraction in mass spectrometer and measure argon
8. For portion of gas stored in V_1 only:
   a. Isolate gas in V_1; evacuate V_m and 1/2 V_{ss} (5 min.)

UNCONTROLLED DOCUMENT

b. Isolate system from pumps (1 min.)

c. Expand gas from V_1 to 1/2 V_{ss} or V_m + 1/2 V_{ss} (2 min.)

d. Isolate gas in mass spectrometer (2 - 5 min.)

e. Measure Argon

UNCONTROLLED DOCUMENT

02 Sample Analysis - gas phase splits

1.0 Purpose

This procedure explains the steps used to analyze gas phase splits.

2.0 Definitions

The nomenclature used in this procedure is explained in greater detail in Appendix B.

3.0 Procedures

Samples in the gas phase can be interfaced to the manifold volume (V_m) either at V_m or aliquot "D". Install and leak test sample cylinder connections (see Appendix B for procedure).

3.1 Helium analysis

1. Evacuate intervening volume of sample aliquot volume and, if appropriate, isotope dilution aliquot (3 - 5 min.)

2. Isolate system from pumps (1 min.)

3. Admit isotope dilution spike(s) (if measurement is by isotope dilution) (3 - 5 min.)

4. Admit aliquot of sample (V_m or "D") (3 - 5 min.)

5. Record number of spike(s) and reservoir (if used) and number and name of sample aliquot used in the Mass Spectrometer Log Book.

6. Getter to 10V (10 - 20 min.)

7. Getter to 5V (5 - 10 min.)

8. Getter off; install LN_2 on Charcoal Trap No. 2 (20 min.)

9. If neon will be measured in same mixture, then isolate V_m from 1/2 V_{ss} (1 min.)

10. Isolate gas from either 1/2 V_{ss} or V_1 in mass spectrometer

11. If gas from V_1 is measured

    a. Isolate gas in V_1 (2 min.)

    b. Evacuate 1/2 V_{ss} or 1/2 V_{ss} + V_m (5 min.)

    c. Isolate system from pumps (1 min.)

    d. Expand gas from V_1 to 1/2 V_{ss} or 1/2 V_{ss} + V_m (2 min.)

    e. Isolate gas in mass spectrometer (2 - 5 min.)

UNCONTROLLED DOCUMENT

12. Measure helium

3.2 Neon analysis (from V_m storage following helium)

1. Evacuate helium fraction from mass spectrometer (3 min.)
2. Check that V_m has remained isolated; isolate V_t from system (2 min.)
3. Remove LN_2 from Charcoal Trap No. 2 (1 min.)
4. Evacuate 1/2 V_{mm} (10 - 20 min.)
5. Isolate 1/2 V_{mm} from Ion pump (1 min.)
6. If additional clean-up is necessary, perform the following (otherwise skip to step 7)
   a. Getter to 10V (1 min.)
   b. Expand gas from V_m to 1/2 V_{mm} (10 min.)
   c. Getter off (5 min.)
7. Expand V_m to 1/2 V_{mm} (1 min.)
8. Install LN_2 on Charcoal Trap No. 2 (15 - 20 min.)
9. Isolate the gas in mass spectrometer (2 min.)
10. Isolate V_m from 1/2 V_{mm} (optional) (1 min.)
11. Measure neon with regular or high sensitivity electrometer

3.3 Neon analysis

1. Evacuate intervening volume of sample aliquot volume and, if appropriate, isotope dilution aliquot
2. Isolate system from pumps (1 min.)
3. Admit isotope dilution spike(s) (if measurement is by isotope dilution) (3 - 5 min.)
4. Admit aliquot of sample (V_m or "D") (3 - 5 min.)
5. Record number of spikes and reservoir (if used) and number and name of sample aliquot used in the Mass Spectrometer Log Book.
6. Getter to 10V (10 - 20 min.)
7. Getter to 5V (5 min.)

UNCONTROLLED DOCUMENT

8. Install LN_2 on Charcoal Trap No. 2; getter off (20 min.)

9. With argon separation, perform the following (otherwise skip to step 10)

   a. Isolate V_m from 1/2 V_{ss} (1 min.)

   b. Remove LN_2 from Charcoal Trap No. 2 (1 min.)

   c. Evacuate 1/2 V_{ss} (15 - 20 min.)

   d. Isolate 1/2 V_{ss} from Ion Pump (1 min.)

   e. Expand gas from V_m to 1/2 V_{ss} (2 min.)

   f. Install LN_2 on Charcoal Trap No. 2 (15 - 20 min.)

10. Isolate gas in mass spectrometer (2 - 5 min.)

11. Measure neon with regular or high sensitivity electrometer

3.4 Argon analysis

1. Evacuate intervening volume of sample aliquot volume and, if appropriate, isotope dilution aliquot.

2. Isolate system from pumps (1 min.)

3. Admit isotope dilution spike(s) (if measurement is by isotope dilution) (3 - 5 min.)

4. Admit aliquot of sample (V_m or "D") (3 - 5 min.)

5. Record number of spikes and reservoir (if used) and number and name of sample aliquot used in the Mass Spectrometer Log Book.

6. Getter to 10V (10 - 20 min.)

7. Getter to 5V (5 min.)

8. Getter off; install LN_2 on Charcoal Trap No. 2 (20 min.)

9. Evacuate helium-neon fraction from 1/2 V_{ss} + V_m (5 min.)

10. Isolate system from pumps (1 min.)

11. Remove LN_2 from Charcoal Trap No. 2 (10 min.)

12. Install DI on Charcoal Trap No. 2 (10 min.)

13. If only V_1 is measured, perform the following (otherwise skip to step 14)

    a. Isolate gas in V_1 (2 min.)

UNCONTROLLED DOCUMENT

b. Evacuate 1/2 V_{ss} + V_m (5 min.)

c. Isolate system from pumps (1 min.)

d. Expand gas from V_t to 1/2 V_{ss} + V_m (5 min.)

14. Isolate gas in mass spectrometer (2 - 5 min.)

15. Measure argon

UNCONTROLLED DOCUMENT

3.5 Sequence for all five noble gases

1. Assemble sample cylinder to system as shown below (Fig. 1a).

2. Evacuate system using fore vacuum pump and check for vacuum integrity.

3. Bake cold trap, He-Ne-Ar storage cylinder, charcoal trap, and expansion cylinder (>100°C).

4. Isolate system (close Vp) from fore vacuum system and evacuate system ($<10^{-6}$torr) on turbo pump via mass spectrometer sample system.

5. Terminate baking of system.

6. Evacuate aliquot volume used for introduction of isotope dilution spike gas.

7. Close valves to aliquot volume V_C.

8. Close V_A and add aliquot(s) of isotope dilution spike gas.

9. Install ice bath (0°C) on expansion cylinder.

10. Open valve on fluid sample to expand dissolved gases to vacuum system.

11. Heat fluid sample to 100°C. Note - 25 cc cylinders require approximately 20 minutes of heating, copper tube samples approximately 10 minutes, and large, thick walled, 675 cc containers approximately 1 hour. Record isotope dilution information in Mass Spectrometer Logbook.

12. Terminate heating of fluid sample and install ice bath (0°C) on sample cylinder.

13. Close valves to He-Ne-Ar storage cylinder and Kr-Xe storage cylinder.

14. Install ice bath (0°C) on cold trap. Remove ice bath from sample and expansion cylinders.

15. Open V_A and allow residual water vapor to condense (requires approximately one-half hour).

16. Close valves to fluid sample, expansion cylinder, and V_A.

17. Install dry ice on charcoal trap for Kr-Xe storage cylinder.

18. Expand gas to He-Ne-Ar storage cylinder.

19. Expand gas to Kr-Xe storage cylinder and open valve to charcoal trap.

20. Expand aliquot(s) of V_c for $^3He/^4He$ measurements using Procedure 02, 3.1, without additional isotope dilutions.

21. Close valves to Kr-Xe storage cylinder.

22. Remove dry ice and allow Kr-Xe to fill 25cc storage cylinder.

23. Expand aliquot(s) of V_c for $^{40}Ar/^{38}Ar/^{36}Ar$ measurements using Procedure 02, 3.4, without additional isotope dilutions.

24. Warm charcoal trap to 60°C (15 min.).

25. Close valve between Kr-Xe storage cylinder and charcoal trap.

26. Use one of the following options for Ne measurements.

    (1) Remove the He-Ne-Ar storage cylinder and use Procedure 02, 3.3, without additional isotope dilution.

    (2) a. Install LN_2 on cold trap.

        b. Expand gas bound by V_A and V_c to mass spectrometer sample systems.

        c. Measure Ne using Procedure 02, 3.3, without additional isotope dilution.

27. Remove Kr-Xe storage cylinder and assemble to interface with Vm (see Appendix A).

28. Evacuate intervening volume of sample aliquot.

29. Isolate system from pumps.

30. Admit aliquot(s) of sample gas.

31. Install dry ice on charcoal (20 min.).

32. Pump system to remove residual argon and isolate system from pumps.

33. Remove dry ice from charcoal.

34. Getter to 10V (10-20 min.).

35. Getter off (10 min.).

36. Isolate gas in mass spectrometer.

37. Measure Kr (masses 82, 83, 84, 86).

38. At completion of Kr measurements, pump system to $<10^{-7}$ torr.

UNCONTROLLED DOCUMENT

39. Isolate system from pumps.

40. Admit aliquot(s) of sample.

41. Install dry ice on charcoal (20 min.).

42. Pump system to remove residual argon and isolate system from pumps.

43. Remove dry ice from charcoal and warm to approximately 50°C.

44. Getter to 10V (10-20 min.).

45. Getter off (10 min.).

46. Isolate gas in mass spectrometer.

47. Measure Xe (masses 128, 129, 131, 132).

48. Pump system at completion of Xe measurements.

49. Remove fluids from sample container and expansion volume, complete sample custody forms and archive samples.

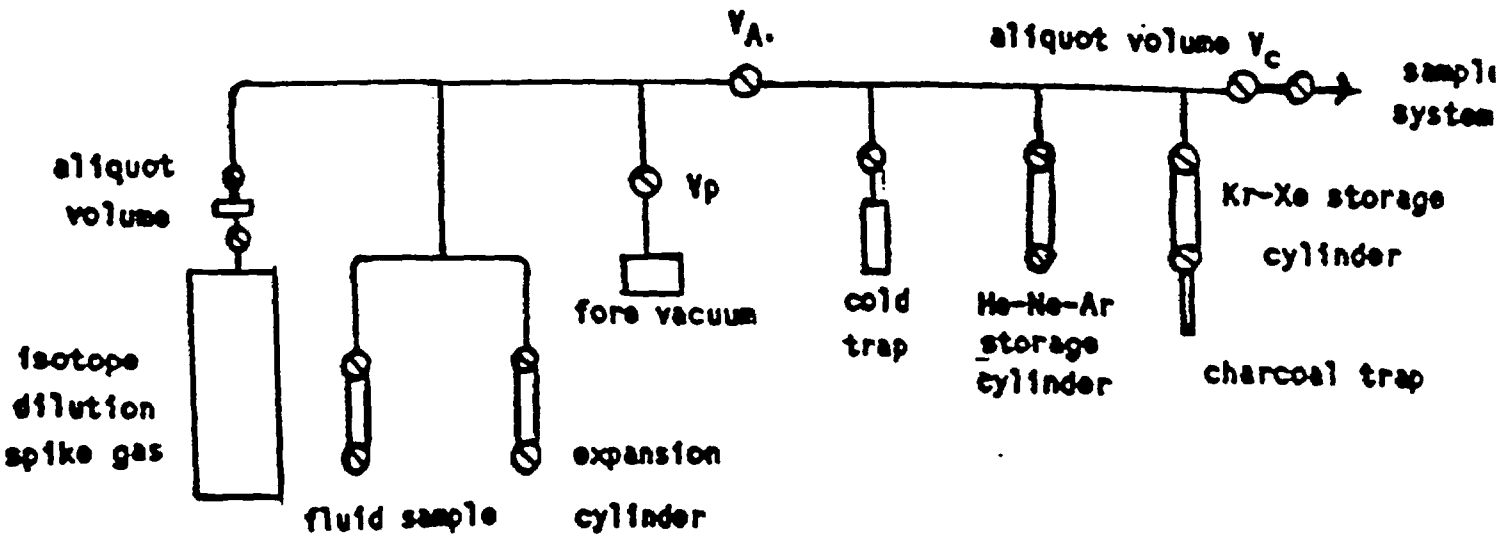

Figure 1a Schematic of System for Doing All Five Gases

3.6 Neon analysis using He refrigeration

1. Isolate He refrigeration charcoal finger and start to cool it down to 30°K.

2. Follow appropriate separation and spike procedure for sample (reference Sections 02, 03, and 04).

UNCONTROLLED DOCUMENT

3. Admit aliquot or full fraction of the sample (3-5 min).

4. Place LN_2 on charcoal No. 1 (10-15 min).

5. Set getter to 10v (10-20 min).

6. Set getter to 5v (5 min).

7. Expose sample to He refrigeration charcoal finger at 30°K. Getter off (15 min).

8. If He analysis is desired, perform the following (otherwise skip to step 9):

   a. Isolate He refrigeration charcoal finger.

   b. Isolate charcoal No. 1 (1 min).

   c. Place LN_2 on charcoal No. 2 (15 min).

   d. Turn down HV, then admit He fraction into the mass spectrometer (2-5 min).

   e. Turn up HV and analyze He.

   f. Record conditions for the analysis in the mass spectrometer logbook.

   g. Evacuate gas from mass spectrometer and remove LN_2 from charcoal No. 2.

9. Evacuate V_{ss} and He refrigeration charcoal finger, making sure that the He refrigeration charcoal finger is still at 30°K.

10. Isolate V_{ss} from pump (1 min).

11. Allow He refrigeration charcoal finger to warm up to 77°K (15 min).

12. Place LN_2 on charcoal No. 2. Turn electron voltage to 45v. Turn HV up (15 min).

13. Turn down HV, then admit Ne fraction into the mass spectrometer (2-5 min).

14. Turn up HV and analyze Ne.

15. Record conditions for the analysis in the mass spectrometer logbook.

16. Evacuate V_{ss} and mass spectrometer.

UNCONTROLLED DOCUMENT

03 Separation of gas phase (splits) from fluid samples

1.0 Purpose

This procedure presents the steps taken to separate the gas phase (splits) from fluid samples. Once separated, the gas phase is analyzed as in section 02, Sample Analysis - gas phase splits. Actual conditions used will be noted in the Mass Spectrometer Laboratory Notebook and/or the Sample Measurement Notebook.

2.0 Definitions

The nomenclature used in this procedure is explained in greater detail in Appendix B.

3.0 Procedure

3.1 Small volume fluid samples

1. On portion V_1 of the system, install and leak test the fluid sample cylinder, expansion cylinder(s), system blank cylinder (if used), and necessary fittings.

2. Perform volume determinations

3. Isolate V_1 from V_{tot} (1 min.)

4. If no system blank is taken, skip to step 5

   a. Allow evacuated gas expansion system to stand static (2 min.)

   b. Isolate system blank cylinder from gas expansion cylinder(s) (1 min.)

5. Close valve to expansion cylinder(s) then open 1/4 to 1/2 turn (1 min.)

6. Wrap heat tape around fluid sample cylinder and thermocouple probe; then wrap all in aluminum foil

7. Open upper fluid sample cylinder valve (1 min.)

8. Heat fluid sample cylinder to 150°C (15 - 30 min.)

9. Allow fluid sample cylinder to cool to room temperature (30 - 45 min.)

10. Open expansion cylinder valve(s) and allow gas to equilibrate (3 - 5 min.)

11. Isolate expansion cylinder(s)

12. Disassemble system; preserve degassed liquid sample and return to Sample Plant

UNCONTROLLED DOCUMENT

3.2 Large volume fluid sample

1. On portion V_1 of the system, install and leak test the fluid sample cylinder, expansion cylinder(s), 1-liter expansion cylinder for radon (if used), system blank cylinder, and 1-liter condensation trap

2. Perform volume determinations

3. Isolate V_1 from V_{tot} (1 min.)

4. Allow evacuated gas expansion system to stand static (2 min.)

5. Isolate system blank cylinder from gas expansion system (1 min.)

6. Isolate all cylinders of gas expansion system (2 min.)

7. Wrap heat tape around fluid sample and thermocouple probe; then wrap all in aluminum foil

8. Place container of ice around condensation trap

9. Open upper valve on fluid sample cylinder (1 min.)

10. Heat fluid sample cylinder to 150°C (20 - 40 min.)

11. Allow fluid sample cylinder to cool to room temperature (40 - 90 min.)

12. Expand gas to all gas expansion cylinders except radon cylinder (5 min.)

13. Isolate all gas expansion cylinders (2 min.)

14. Expand remaining gas to radon gas expansion cylinder (5 min.)

15. Isolate radon gas expansion cylinder

16. Disassemble system; preserve degassed fluid

UNCONTROLLED DOCUMENT

04. ROCK SAMPLE ANALYSIS

1.0 PURPOSE

The following procedures detail the steps to analyze a rock sample using the RF furnace or the low temperature resistance furnace. Rock samples that totally degass below 800° C and that are volatile rich should be heated in the low temperature resistance furnace. The maximum temperature for the low temperature resistance furnace is 900° C. All other samples should be degassed in the RF induction furnace.

2.0 DEFINITIONS

LTRF - low temperature resistance furnace. The LTRF is composed of two parts, a resistance heater and a sample tube.

RF furnace - Radio frequency induction furnace

Generator (RF) - Refers to RF (radio frequency) generator used to heat the rock sample.

Temp - Temperature of experiment in degrees Celsius

MV - Millivolt reading measured inside furnace. The millivolt reading is used to determine degrees Celsius inside the crucible of the furnace.

P_{MS} - Internal pressure of mass spectrometer, value is recorded on procedure/actual conditions sheet.

Title - Title for experiment

File - Number of HP9825 file where raw mass spectrometer data is stored.

$^3He/^4He/H_2$ - Peak heights for these isotopes are measured and the value recorded on the procedure/actual conditions sheet (Figs. 2 and 3).

Gain - Gain scale used for experiment; value recorded on procedures/actual conditions sheet (Figs. 2 and 3).

3.0 PROCEDURE

3.1 Procedural Blank Analysis

The conditions, procedure, and time for a blank analysis should closely resemble a sample analysis. A blank analysis should precede a sample analysis.

UNCONTROLLED DOCUMENT

3.1.1 Blank Analysis for RF Furnace

The procedure for blank analysis is recorded on the Actual Conditions - blank form (see Figure 2A). The time for each step is written on the form in the space provided on the left of the page.

1. Turn on the water to the furnace and the generator (2 minutes).

2. Turn on the radio frequency generator (5 minutes).

3. Close V_f. (1 minute).

4. Install LN_2 on Charcoal Trap No. 1 (1 minute).

5. Turn on the plate power, then increase gradually to attain desired temperature (10 minutes).

6. Enter the temperature and the millivolt readings in the blanks provided on the Actual Conditions - blank form (Fig. 2A) (25 minutes).

7. Decrease the power to 0, then turn the plate power off (1-5 minutes).

8. Isolate V_3 from V_4 and isolate V_3 and V_4 from pumps (1 minute).

9. Install LN_2 on Charcoal Trap No. 2 (1 minute).

10. Add the isotope dilution spike(s), if applicable (5 minutes).

11. Open V_f and expand the gas to V_4 (10 minutes).

12. Set getter to 10V and turn off RF (5 minutes).

13. Close V_f, and getter to 5V (5 minutes).

14. Turn on the Mass Spectrometer Electronics (5 minutes).

15. Close the valve to Mass Spectrometer ion pump (1 minute) and turn off the high voltage (HV).

16. Admit He-Ne fraction (2 minutes).

17. Turn on the high voltage (HV) for He run (admit V_3 fraction, if necessary).

18. Pump residual He-Ne during He analysis (5 minutes).

UNCONTROLLED DOCUMENT

19. Close V_f, remove LN_2 from Charcoal Trap No. 1 (5 minutes).

20. Install the dry ice on Charcoal Trap No. 1.

21. Complete He run, filling in the appropriate blanks on the Actual Conditions - blank form (Fig. 2A).

22. Pump the Mass Spectrometer system, V_3, V_4, and V_5. Remove LN_2 from Charcoal Trap No. 2 (10 minutes).

23. Isolate V_3 and V_4 from the pumps.

24. Open V_f (5 minutes).

25. Close V_f (1 minute).

26. Install dry ice (DI) on Charcoal Trap No. 2.

27. Close the valve to Mass Spectrometer ion pump and turn off high voltage (HV).

28. Admit Ar fraction V_5, V_4, V_3 or total and note fraction admitted on the Actual Conditions - blank form (Fig. 2A) (2 minutes).

29. Turn on high voltage (HV) for Ar run.

30. Complete Ar run, enter required data on the Actual Conditions - blank form (Fig. 2A).

31. Pump the Mass Spectrometer system, V_3, V_4, and V_5, then open V.

32. Remove dry ice (DI) from Charcoal Trap No. 1 and Charcoal Trap No. 2.

UNCONTROLLED DOCUMENT

3.1.2 Blank Analysis for LTRF

The procedure for blank analysis is recorded on the Actual Conditions--blank LTRF form (see Figure 2B). The time for each step is written in the space provided on the left side of the form.

1. Close V_s (1 minute).

2. Place LN_2 on trap "A" (1 minute).

3. Slowly bring LTRF to desired temperature (15 minutes).

4. Enter the temperature and times in the space provided on the Actual Conditions form (20 minutes) (Fig 2B).

5. Turn off voltage to furnace and allow to cool. Close valve to trap "A" and place LN_2 on trap "B" (10 minutes).

6. Open resistance heater and remove. Place a fan on the sample tube to cool it to room temperature (2 minutes).

7. Set getter to 10V (10 minutes).

8. Check that V_{turbo} and V_{inlet} are closed and that $V_{clean-up}$ and V_f are open.

9. Close $V_{ion\ pump}$ and then open V_s (5 minutes).

10. Place LN_2 on Charcoal No. 1 (10 minutes).

11. Close V_s (1 minute).

12. Perform steps 13 through 32 of the above method for Blank Analysis for RF furnace (3.1.1).

UNCONTROLLED DOCUMENT

Figure 2A. Actual Conditions - Blank Form

ACTUAL CONDITIONS - BLANK

Time Date_____Sample BLANK Temp_____

_____Water to furnace & generator - ON (2 min.)

_____RF - ON (5 min.)

_____Close V_1 (1 min.)

_____LN_2 on Charcoal Trap No. 1 (1 min.)

_____Plate Power - ON

_____Increase power gradually to attain temperature (10 min.)

_____Temp_____HV_____(25 min.)

_____Decrease power to 0, plate power OFF (1 - 5 min.)

_____Isolate V_3 - V_4 and Isolate V_5 - V_6 from pumps (1 min.)

_____LN_2 on Charcoal Trap No. 2 (1 min.)

_____Add isotope dilution spike(s) (if applicable) (5 min.)_____

_____Open V_1 and Expand gas to V_4 (5 min.)

_____SAES getter to 10V, RF OFF (10 min.)_____Make dry ice

_____Close V_1, SAES getter to 5V (5 min.)

_____MS Electronics ON, SAES getter to 0 volts (5 min.)

_____Close valve to MS ion pump; HV - OFF (1 min.)

_____Admit He-Ne fraction (2 min.)

_____HV-ON, for He run; (Admit V_3 fraction if necessary)

_____Pump residual He-Ne during He analysis (5 min.)

_____Close V_1, remove LN_2 from Charcoal Trap No. 1 (5 min.)

_____Install DI on Charcoal Trap No. 1

_____Complete He run, P_{He} = _____Title_____File_____

^3He = _____^4He = _____N_2 = _____Gain_____

_____Pump M.S. system, V_3, V_4, V_5. Remove LN_2 from Char. Trap No. 2 (10 min.)

_____Isolate V_3 & V_4 from pumps

_____Open V_1 (5 min.)

_____Close V_1 (1 min.)

_____DI on Charcoal Trap No. 2.

_____Close valve to MS ion pump; HV - OFF

_____Admit Ar fraction V_3, V_4, V_5 or total (2 min.)_____

_____HV - ON for Ar run

_____Complete Ar run, P_{Ar} = _____Title_____File_____

^{36}Ar = _____^{38}Ar = _____^{40}Ar = _____Gain_____

_____Pump M.S. system, V_3, V_4, V_5, open V_1

_____Remove DI from Charcoal Trap No. 1 & Charcoal Trap No. 2

By_____

UNCONTROLLED DOCUMENT

Figure 2B. Actual Conditions - Blank Form

LTRF

Date_____ Sample_____Temp

_____ Close V_s (1 minute).
_____ Place LN_2 on trap "A" (1 minute).
_____ Slowly bring LTRF to desired temperature (15 minutes).
_____ Temperature _____ (20 minutes)
_____ Turn OFF voltage to LTRF. Close valve to trap "A" and place LN_2 on trap "B" (10 minutes).
_____ Remove resistance heater. Place fan on sample tube (2 minutes).
_____ Turn getter to 10V (10 minutes).
_____ Check that V_{turbo} and V_{inlet} are closed and that $V_{clean-up}$ and V_f are open (1 minute).
_____ Close $V_{ion\ pump}$ and then open V_s (5 minutes).
_____ Place LN_2 on Charcoal No. 1 (10 minutes).
_____ Close V_s (1 minute).
_____ Close V_f SAES getter to 5V (5 minutes).
_____ MS Electronics ON, SAES getter to 0 volts (5 minutes).
_____ Close valve to MS ion pump; HV-OFF (1 minute).
_____ Admit He-Ne fraction (2 minutes).
_____ HV-ON, for He run (admit V_3 fraction, if necessary).
_____ Pump residual He-Ne during He analysis (5 minutes).
_____ Close V_f, remove LN_2 from Charcoal No. 1 (5 minutes).
_____ Install DI on Charcoal No. 1.
_____ Complete He run, P_{ms} = _____ Title_____ File_____
^3He = _____ ^4He = _____ H_2 = _____ Gain_____
_____ Pump MS system, V_3, V_4, V_5. Remove LN_2 from Charcoal No. 2 (10 minutes).
_____ Isolate V_3 and V_4 from pumps.
_____ Open V_f (5 minute).
_____ Close V_f (1 minute).
_____ DI on Charcoal No. 2 (15 minutes).
_____ Close valve to MS ion pump; HV - OFF.
_____ Admit Ar fraction V_5, V_4, V_3 or total (2 minutes).
_____ HV - ON for Ar run.
_____ Complete Ar run, P_{ms} = _____ Title_____ File_____
^{36}Ar = _____ ^{38}Ar = _____ ^{40}Ar = _____ Gain_____
_____ Pump MS system, V_3, V_4, V_5, open V.
_____ Remove DI from Charcoal No. 2.

By_____

UNCONTROLLED DOCUMENT

3.2.1 Sample Analysis Using the RF Furnace

The procedure for sample analysis is recorded on the Actual Conditions - sample form (see Figure 3A). The time for each step is written in the space provided on the left side of the form.

1. Turn on the water to the furnace and the generator (2 minutes).

2. Turn on the radio frequency (RF) generator (5 minutes).

3. Close V_f (1 minute).

4. Install LN_2 on Charcoal Trap No. 1 (1 minute).

5. Turn on the plate power, then increase gradually to attain desired temperature (10 minutes).

6. Enter the temperature and millivolt readings in the blanks provided on the Actual Conditions form (25 minutes) (Fig. 3A).

7. Decrease the power to 0, turn the plate power off (1-5 minutes).

8. Isolate V_3 from V_4 and isolate V_3 and V_4 from the pumps (1 minute).

9. Add the isotope dilution spike(s), if applicable (5 minutes).

10. Open V_f (10 minutes).

11. Set getter to 10V (5 minutes).

12. Expand the gas to V_4 and turn off the radio frequency generator (10 minutes).

13. Close V_f and getter to 5V (5 minutes).

14. Turn on the Mass Spectrometer Electronics and install LN_2 on Charcoal Trap No. 2 (5 minutes).

15. Set getter to 0 volts (5 minutes).

16. Isolate V_4 from V_3 (1 minute).

17. Close the valve to the Mass Spectrometer ion pump and turn off the high voltage (HV) (1 minute).

18. Admit He-Ne fraction (2 minutes).

UNCONTROLLED DOCUMENT

19. Turn on the high voltage (HV) for He run (admit V_3 fraction, if necessary).

20. Pump residual He-Ne during He analysis (5 minutes).

21. Close V_f, remove LN_2 from Charcoal Trap No. 1 (5 minutes).

22. Install dry ice (DI) on Charcoal Trap No. 1.

23. Complete He run, filling in the appropriate blanks on the Actual Conditions - sample form (Fig. 3A).

24. Pump Mass Spectrometer system, V_3, V_4, and V_5. Remove LN_2 from Charcoal Trap No. 2 (10 minutes).

25. Set getter to 10V (5 minutes).

26. Isolate V_3 and V_4 from the pumps.

27. Open V_f (5 minutes).

28. Close V_f (10 minutes).

29. Getter - off and install dry ice (DI) to Charcoal No. 2 (15 minutes).

30. Close the valve to the Mass Spectrometer ion pump and turn off high voltage (HV).

31. Admit Ar fraction V_5, V_4, V_3 or total (2 minutes), note fraction admitted on the Actual Conditions - sample form (Fig. 3A).

UNCONTROLLED DOCUMENT

32. Turn on the high voltage (HV) for Ar run.

33. Complete Ar run, enter required data on the Actual Conditions sheet (Fig. 3A).

34. Pump the Mass Spectrometer system, V_3, V_4, and V_5, then open V.

35. Remove the dry ice (DI) from Charcoal Trap No. 1 and Charcoal Trap No. 2.

3.2.2 Sample Analysis Using the LTRF

The procedure for sample analysis is recorded on the Actual Conditions - Sample LTRF form (see Figure 3B). The time for each step is written in the space provided on the left side of the form.

1. Prepare spike pipette by evacuating the volume, if applicable (3 minutes).

2. Close V_s (1 minute).

3. Add isotope dilution spike(s), if applicable (2 minutes).

4. Place LN_2 on trap "A" (1 minute).

5. Slowly bring LTRF to desired temperature (15 minutes).

6. Enter the temperature and times in the space provided on the Actual Conditions form (20 minutes) (Fig. 3B).

7. Turn off voltage to furnace and allow to cool. Close valve to trap "A" and place LN_2 on trap "B" (10 minutes).

8. Open resistance heater and remove. Place fan on the sample tube to cool it to room temperature (2 minutes).

9. Turn up getter to 10V (10 minutes).

10. Check that V_{turbo} and V_{inlet} are closed and that $V_{clean-up}$ and V_f are open.

11. Close $V_{ion\ pump}$ and then open V_s (5 minutes).

12. Place LN_2 on Charcoal No. 1 (10 minutes).

13. Close V_s (1 minute).

14. Perform steps 13 through 35 of the above method for using the RF furnace (3.2.1).

UNCONTROLLED DOCUMENT

Figure 3A. Actual Conditions - Sample Form

ACTUAL CONDITIONS

Time _____ Date _____ Sample _____ Temp _____

_____ Water to furnace & generator - ON (2 min.)

_____ RF - ON (3 min.)

_____ Close V_c (1 min.)

_____ LN_2 on Charcoal Trap No. 1 (1 min.)

_____ Plate Power - ON

_____ Increase power gradually to attain temperature (10 min.)

_____ Temp _____ MV _____ (25 min.)

_____ Decrease power to 0, plate power OFF (1 - 5 min.)

_____ Isolate V_b - V_c and Isolate V_a - V_d from pumps (1 min.)

_____ Add isotope dilution spike(s) (if applicable) (3 min.) _____

_____ Open V_c (10 min.)

_____ SAES getter to 10V (5 min.)

_____ Expand gas to V_c, RF - OFF (10 min.) _____ Make dry ice

_____ Close V_c, SAES getter to 5V (5 min.)

_____ MS Electronics ON, LN_2 on Charcoal Trap No. 2 (5 min.)

_____ SAES getter to 0 volts (3 min.)

_____ Isolate V_a from V_b (1 min.)

_____ Close valve to MS ion pump (1 min.); MV - OFF

_____ Admit He-Ne fraction (2 min.)

_____ MV-ON, for He run; (Admit V_b fraction if necessary)

_____ Pump residual He-Ne during He analysis (5 min.)

_____ Close V_c, remove LN_2 from Charcoal Trap No. 1 (5 min.)

_____ Install DI on Charcoal Trap No. 1

_____ Complete He run, P_{He} = _____ Title _____ File _____

^{4}He = _____ ^{3}He = _____ H_2 = _____ Gain _____

_____ Pump M.S. system, V_b, V_c, V_d. Remove LN_2 from Char. Trap No. 2 (10 min.)

_____ SAES getter to 10V (5 min.)

_____ Isolate V_b & V_a from pumps

_____ Open V_c (5 min.)

_____ Close V_c (10 min.)

_____ SAES getter - OFF, DI on Charcoal Trap No. 2 (15 min.)

_____ Close valve to MS ion pump; MV - OFF

_____ Admit Ar fraction V_b, V_c, V_d or total (2 min.) _____

_____ MV - ON for Ar run

_____ Complete Ar run, asP = _____ Title _____ File _____

^{36}Ar = _____ ^{38}Ar = _____ ^{40}Ar = _____ Gain _____

_____ Pump M.S. system, V_b, V_c, V_d, open V_c

_____ Remove DI from Charcoal Trap No. 1 & Charcoal Trap No. 2

UNCONTROLLED DOCUMENT

Figure 3B. Actual Conditions - Sample Form

LTRF

Date_____ Sample_____ Temp

_____ Evacuate pipette volume (3 minutes).
_____ Close V_8 (1 minute).
_____ Add isotope dilution spike(s), if applicable (2 minutes).
_____ Place LN_2 on trap "A" (1 minute).
_____ Slowly bring LTRF to desired temperature (15 minutes).
_____ Temperature of LTRF _____ (20 minutes).
_____ Turn OFF voltage to LTRF. Close valve to trap "A" and place LN_2 on trap "B" (10 minutes).
_____ Remove resistance heater. Place fan on sample tube (2 minutes).
_____ Turn getter to 10 V (10 minutes).
_____ Check that V_{turbo} and V_{inlet} are closed and that $V_{clean-up}$ and V_f are open (1 minute).
_____ Close $V_{ion\ pump}$ and then open V_8 (5 minutes).
_____ Place LN_2 on charcoal No. 1 (10 minutes).
_____ Close V_8 (1 minute).
_____ Close V_f, SAES getter to 5V (5 minutes).
_____ MS Electronics ON, LN_2 on Charcoal No. 2 (5 minutes).
_____ SAES getter to 0 volts (5 minutes).
_____ Isolate V_4 from V_3 (1 minute).
_____ Close valve to MS ion pump (1 minute).
_____ Admit He-Ne fraction (2 minutes).
_____ HV ON for He run (admit V_3 fraction, if necessary).
_____ Pump residual He-Ne during He analysis (5 minutes).
_____ Close V_f, remove LN_2 from Charcoal No. 1 (5 minutes).
_____ Install DI on Charcoal No. 1.
_____ Complete He run, P_{MS} = _____ Title_____ File_____
^3He = _____ ^4He = _____ H_2 = _____ Gain_____
_____ Pump MS system, V_3, V_4, V_5. Remove LN_2 from Charcoal No. 2 (10 minutes).
_____ SAES getter to 10V (5 minutes).
_____ Isolate V_3 and V_4 from pumps.
_____ Open V_f (5 minutes).
_____ Close V_f (10 minutes).
_____ SAES getter OFF, DI on Charcoal No. 2 (15 minutes).
_____ Close valve to MS ion pump.
_____ Admit Ar fraction V_5, V_4, V_3 or total (2 minutes).
_____ HV ON for Ar run.
_____ Complete Ar run, P_{MS} = _____ Title_____ File_____
^{36}Ar = _____ ^{38}Ar = _____ ^{40}Ar = _____ Gain_____
_____ Pump MS system, V_3, V_4, V_5, open V_f.
_____ Remove DI from Charcoal No. 1 and Charcoal No. 2.

By_____

UNCONTROLLED DOCUMENT

05 Data Acquisition using the HP9825

1.0 Purpose

The purpose of this procedure is to list the method for Mass Spectrometer data acquisition using the HP9825.

2.0 Definitions

The nomenclature used in this procedure is explained in greater detail in Appendix B. See Appendix F for a list of the function keys on HP9825, only a few of these functions are involved in data acquisition.

3.0 Procedures

1. With the cassette tape inserted in the tape drive, turn on power.

2. As instructed, enter "1st C" (f14) - for Argon or "2nd C" (f15) for helium or neon

3. Load an existing set-up (f6) or-write a new set-up (f19). A set-up consists of defining the following:

   a. peak(s) and baseline(s) to be analyzed

   b. multiplier range for each peak and baseline

   c. delay time before measuring each peak and baseline

   d. integration time for each peak and baseline

   e. number of cycles for the run

   f. number of sets for the run (not used)

   g. number of next set for the run (not used)

4. Once the gas is in the machine and has equilibrated, the voltage for the ion accelerator is turned on. This represents T_0 for the run and the T_0 function (f7) is pressed.

5. If the preselected multiplier ranges are not correct, new ranges can be entered into the HP9825 at this time.

6. Press "Search" function (f20), switch magnet regulator to external mode, press CONTINUE and perform the steps as directed by the HP9825. At the normal termination of the run, the data are automatically stored on cassette tape on the HP9825. The number of the file in which they are stored is written on the paper tape output and recorded in the Mass Spectrometer Log Notebook.

UNCONTROLLED DOCUMENT

4.0 References

1. Operating and Programming Reference Manual for the HP9825.

2. I/O Control Reference Manual for the HP9825.

UNCONTROLLED DOCUMENT

06 Transfer of Data Files from HP9825 to Cassette Tape on HP2648

1.0 Purpose

This procedure outlines the transfer of data files from the HP9825 cassette tape to the cassette tape on the HP2648.

2.0 Definitions

The nomenclature used in this procedure is explained in greater detail in Appendix B. See Appendix F for a list of the function keys on the HP9825.

3.0 Procedures

1. With cassette tape cartridge inserted in tape drive of HP9825, turn on power. (Note - if auto load fails, rewind tape, type "ldp0", press EXECUTE.)

2. Reload data file to be transferred

   a. press "Reload" function (f17)

   b. as directed, enter file number to be transferred (recorded in the Mass Spectrometer Log Notebook)

   c. press CONTINUE

3. Enter information for file header (tag) (Note - the information to answer inquiries will be found in the Mass Spectrometer Log Book for the experiment.)

   a. press "CHOMP" function (f10)

   b. enter code for electrometer head used
      1 = Faraday Cup
      2 = Regular Head (usual response)

   c. press CONTINUE

   d. enter code for operator
      1 = Tony Zaikowski 3 = Ed Novak
      2 = Bonnie Kosanke

   e. press CONTINUE

   f. enter code for gas being analyzed
      1 = helium
      2 = neon
      3 = argon
      4 = krypton
      5 = xenon

   g. press CONTINUE

UNCONTROLLED DOCUMENT

h. enter 4-digit sample number for file being transferred and note file number in mass spectrometer lab book (usually next sequential number)

i. press CONTINUE

j. enter sample code number
   99 = calibration
   0 = cold blank
   1-16 = temperature of run in hundreds of degrees C

k. press CONTINUE

4. Set switches for transfer of data from HP9825 to HP2648. See Figure 4.

   a. the HP9825 switch box is set to HP2648

   b. the HP2648 switch box is set to HP9825

   c. the HP2648 settings are (See Figure 7 and consult HP2648 User's Reference Manual for detailed explanation)

      - 4800 baud

      - depress Remote, Caps Lock, and Auto LF function buttons

      - set terminal for data to go from display to left tape drive

      - initialize edit function

      - clear screen display

      - position tape to file to be recorded

5. press CONTINUE on HP9825 - to transfer data

6. record data (press RECORD on HP2648)

7. mark an end-of-file on tape on HP2648

4.0 References

1. RTE-6/VM Terminal User's Reference Manual

2. RTE-6/VM Programmer's Reference Manual

3. FORTRAN 77 Reference Manual for RTE-6/VM

4. HP2648A Graphics Terminal User's Manual

5. HP2648A Graphics Terminal Reference Manual

UNCONTROLLED DOCUMENT

6. Operating and Programming Reference Manual for HP9825

7. I/O Control Reference Manual for HP9825

Figure 4 HP2648 and HP9825 Switching Boxes

UNCONTROLLED DOCUMENT

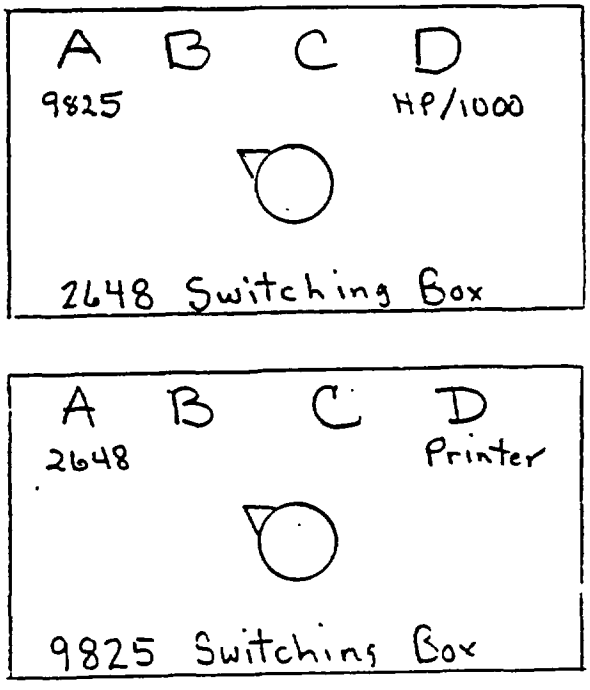

07 Transfer of Data File from HP2648 Cassette Tape to HP1000 Disk File

1.0 Purpose

This procedure outlines the transfer of data files from the HP2648 cassette tape to HP1000 disk files.

2.0 Definitions

The nomenclature used in this procedure is explained in greater detail in Appendix B.

3.0 Procedure

1. Set up for transfer (Reference Figures 4 and 5)

   a. HP2648 switch box is set to HP1000

   b. Auto LF button is released (up)

   c. baud rate - 9600

   d. log onto HP1000

   e. set-up for data to go from left tape to display

   f. position tape at start of file to be transferred

   g. Note - terminal must not be in Edit mode

2. To transfer file, type the following command:

```
: ST,4,_ _(_ _ _ _)::BK::-1,AS,SA<CR>
```

save file
ASCII file
create file of this size
cartridge reference

sample number
I, J, K, etc. for input file
H, N, A, X, K for gas type
Left tape drive (5 = right tape drive)
STORE command
terminal prompt

4.0 References

1. RTE-6/VM Terminal User's Reference Manual
2. RTE-6/VM Programmer's Reference Manual
3. FORTRAN 77 Reference Manual for RTE-6/VM

UNCONTROLLED DOCUMENT

4. HP2648A Graphics Terminal User's Manual

5. HP2648A Graphics Terminal Reference Manual

UNCONTROLLED DOCUMENT

Figure 5 HP2648 Terminal Keyboard

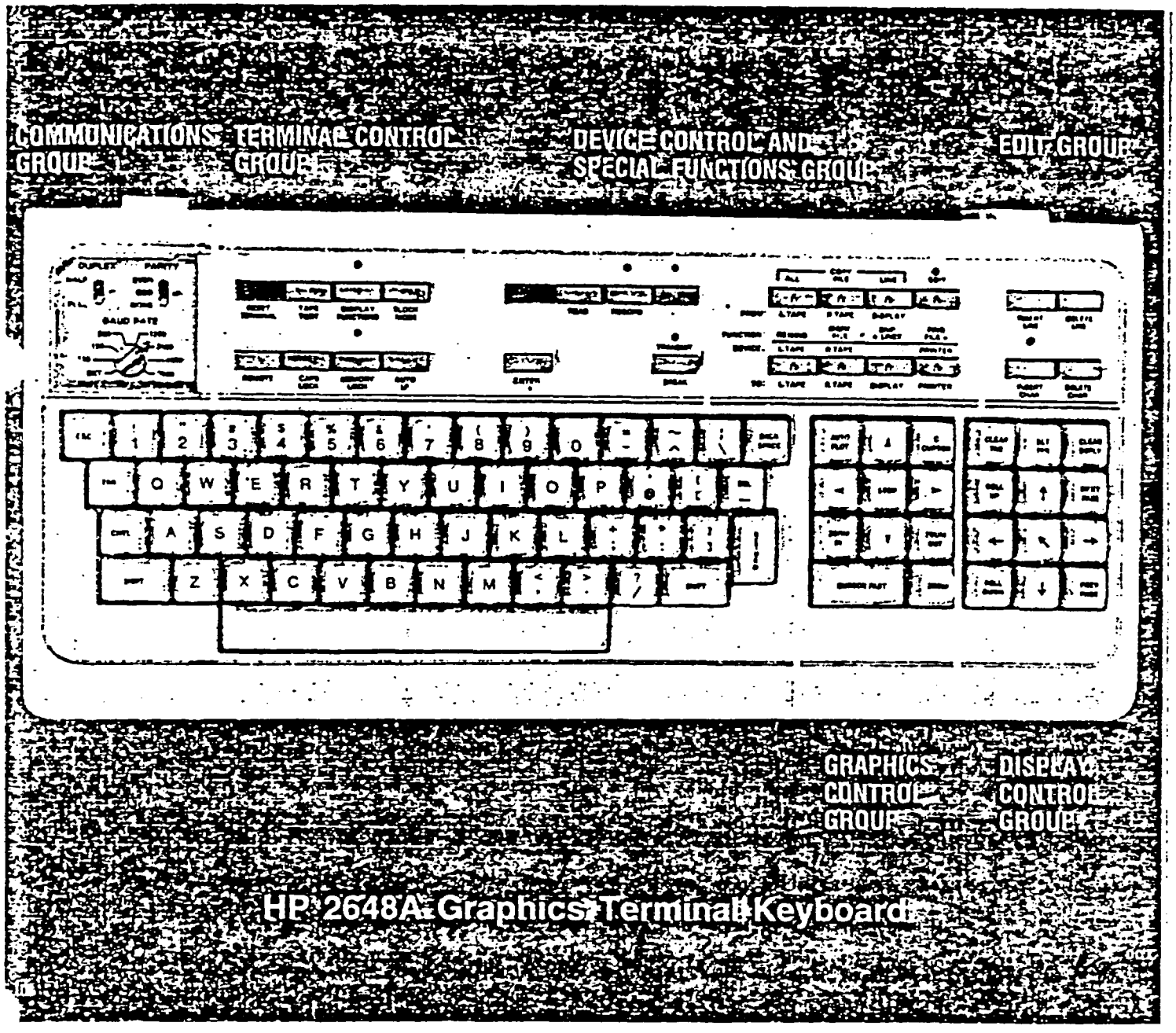

08 Processing Files through CHOMP - Manual mode

1.0 Purpose

This procedure outlines the processing of data files by use of the CHOMP program.

2.0 Definitions

The nomenclature used in this procedure is explained in greater detail in Appendix B.

3.0 Discussion

CHOMP performs data reduction on mass spectrometer raw data files. The computer program prints the data in various stages of computation and prints the results. Optionally it produces printer plots of the time variation of the peaks or ratios and creates an output file suitable for input to FILER.

4.0 Procedure

1. Log on HP1000
2. Type: CHOMP to execute CHOMP program
3. Answer prompts
   - enter name of file to be processed
   - enter option (a complete list of options is listed in Appendix D) two typical sets of options chosen are:

linear	exponential
LIN	SUM
SUM	RAT
RAT	REF
REF	FIL
INP	
DUM	
PL1	
FIL	

4. Make sure printer is in condensed mode, set up for 8 lines per inch and on-line (See Figure 6).

5. To release the file to printer, type: "CS,6"; then "OSPOL".

6. When printing is complete, log off HP1000

5.0 References

1. RTE-6/VM Terminal User's Reference Manual

2. RTE-6/VM Programmer's Reference Manual

3. FORTRAN 77 Reference Manual for RTE-6/VM

UNCONTROLLED DOCUMENT

4. Operator's Manual for HP2631A Printer

5. Reference Manual for HP2630 Family of Printers

Figure 6 2631A Printer Front Switch Panel

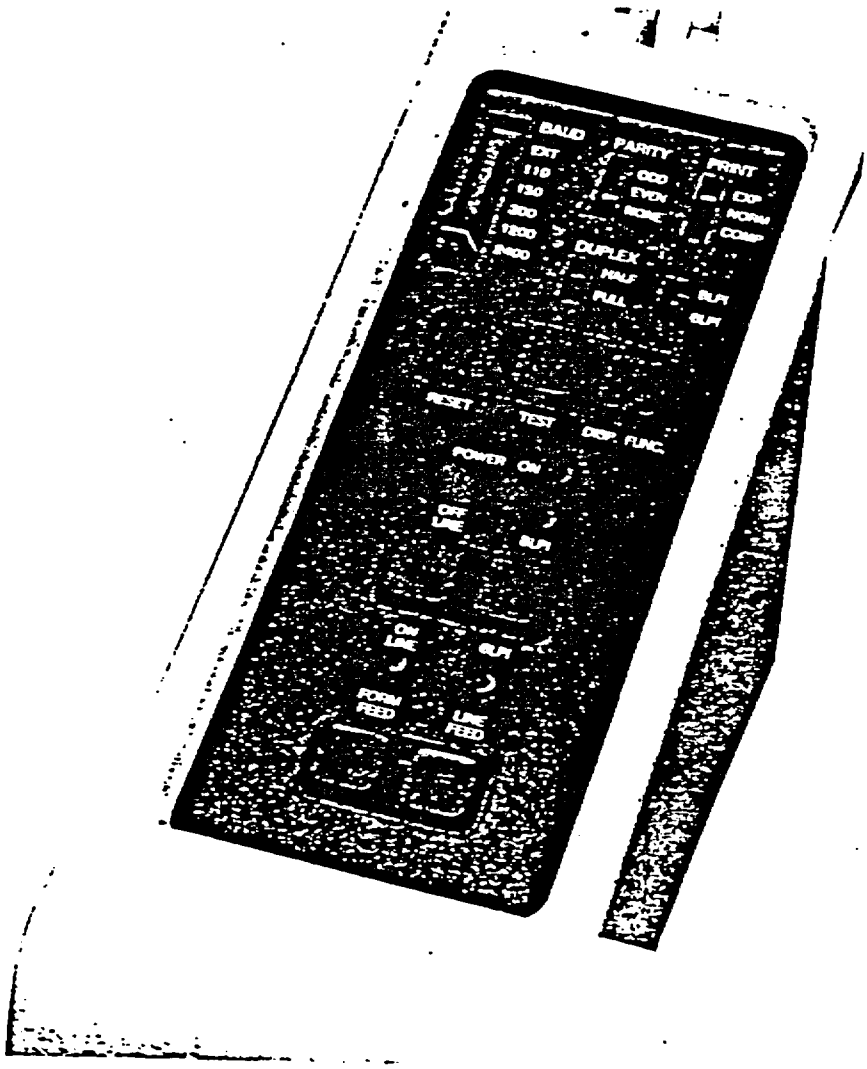

UNCONTROLLED DOCUMENT

09 Processing Files Through CHOMP - Batch Mode

1.0 Purpose

2.0 Definitions

The nomenclature used in this procedure is explained in greater detail in Appendix B.

3.0 Discussion

CHOMP performs data reduction on mass spectrometer raw data files. The computer program prints the data in various stages of computation and prints the results. Optionally it produces printer plots of the time variation of the peaks or ratios and creates an output file suitable for input to FILER. The purpose of using CHOMP in the batch mode is to process several data files in a single job. Refer to Appendix E for CHOMP file naming conventions.

4.0 Procedure

1. Log on HP1000

2. Edit the file CHLINE to enter the names of files to be processed and the total number of files.

```
:TR,*CHBT1,AI1513,HI1513,NI1513,AI1514,HI1515,5
:CS,6
:RU,OSPOL
:TR,*CHBT2,AI1513,HI1513,NI1513,AI1514,HI1515,5
:CS,6
:RU,OSPOL
:TR,*CHBT3,AI1513,HI1513,NI1513,AI1514,HI1515,5
:CS,6
:RU,OSPOL
:TR,*CHBT4,AI1513,HI1513,NI1513,AI1514,HI1515,5
:CS,6
:RU,OSPOL
::
```

name(s) of file(s) being processed — number of files being processed

3. Make sure printer is in condensed mode, 8 lines per inch and on line (see figure 8).

4. Execute a batch job by typing: TR,CHLINE.

5. When printing is complete, log off HP1000.

5.0 References

1. RTE-6/VM Terminal User's Reference Manual

UNCONTROLLED DOCUMENT

2. RTE-6/VM Programmer's Reference Manual
3. FORTRAN 77 Reference Manual for RTE-6/VM
4. Operator's Manual for HP2631A Printer
5. Reference Manual for HP2630 Family of Printers
6. Edit/1000 User's Manual

UNCONTROLLED DOCUMENT

010 Processing Data Files through FILER

1.0 Purpose

The purpose of this procedure is to outline the steps involved to run the mass spectrometer data files through the computer program FILER.

2.0 Discussion

Data reduction is performed on mass spectrometer data files that have been processed through CHOMP. Minimally, FILER transposes the binary CHOMP input file into an ASCII output file. Other FILER options are:

BLANK - performs blank corrections on data
DISCRIM - performs discrimination corrections on data
DELETE - deletes data values
ESCAPE - quit input for current file and ask for name of next input file
INTRF - performs interference corrections on data
NONE - no more corrections desired
REDO - abandons all entries except name of input file
SENSI - computes sensitivities of calibrations or amounts of samples
SPIKE - performs isotope dilution calculations
SUSPEND - suspends program
TILL - allows multiple entries of commands
?? - lists options available

3.0 Definitions

The nomenclature used in this procedure is explained in greater detail in Appendix B.

4.0 Procedure

1. Log on HP1000
2. Type: FILER, to execute FILER program
3. Answer prompts as needed

The results from CHOMP are professionally evaluated to determine the exact parameters to be selected in FILER*. Since FILER is a menu driven program, many options and paths are available to the user. The following discusses some typical examples, but only in generic terms, not as exact computer runs. The actual options chosen are written in the data reduction book.

Helium calibration

a. The binary output file from CHOMP is processed through FILER with no options selected to create an ASCII output file called HCnnnn, where nnnn is the sample number.

---

*Refer to Appendix E or an explanation of file naming conventions and example paths through FILER.

UNCONTROLLED DOCUMENT

Helium sample and isotope dilution

a. The binary CHOMP file is processed through FILER with no options to create an ASCII file called HSnnnn

b. The file HSnnnn is discrimination corrected with the file HCnnnn for the corresponding run, to create the file HDnnnn.

Argon calibration

a. Same as for helium calibration, except output file is named ACnnnn

Argon sample and isotope dilution

a. Same as for helium sample, except output file is named ASnnnn

b. The file ASnnnn is discrimination corrected with the appropriate ACnnnn to create ADnnnn

c. For isotope dilution only, the file ADnnnn is SPIKE corrected to produce SAnnnn

Neon calibration

a. The binary CHOMP file is processed through FILER and the INTRF option is selected to make corrections for interference from dirt peaks. The output file is named NCnnnn.

Neon sample and isotope dilution

a. The same INTRF correction is made to the binary CHOMP file to create the file NSnnnn.

b. The file NSnnnn is discrimination corrected with the appropriate NCnnnn to create the file NDnnnn.

4.0 References

1. RTE-6/VM Terminal User's Reference Manual

2. RTE-6/VM Programmer's Reference Manual

3. FORTRAN 77 Reference Manual for RTE-6/VM

4. Operator's Manual for HP2631A Printer

5. Reference Manual for HP2630 Family of Printers

UNCONTROLLED DOCUMENT

011 Sample Handling and Documentation

1.0 Purpose

This procedure describes the sample handling and documentation procedures used by mass spectrometer personnel.

2.0 Procedure

2.1 Sample handling for gas has the following steps:

1. When samples are received from the sample plant, a Sample Ticket Number has been assigned and a Chain of Sample Custody Form (see Figure 7) has been completed. The Chain of Sample Custody Form is filed in the mass spectrometer lab.

2. A Sample History Document (see Figure 8) is created for the sample. (This form can only be completed once the gas phase samples are created.) This form is temporarily stored with the sample in a cardboard box in the mass spectrometer lab. If the sample is totally consumed, the form will be stored in a notebook in the mass spectrometer lab until permanently archived. The form will stay with sample if it is transmitted to the Sample Plant for archiving.

3. The Sample Inventory Catalog, a computer file on the HP1000, (see Figure 9 for example page) is edited to enter information concerning the sample. Typical information might include:

   Well name and zone.
   Downhole temperature.
   Surface temperature and flow through and closing pressure.
   Name of sampler.
   Sample ticket number.
   Date and time sampled.
   Type of sample (e.g. fluid, gas).
   Source of sample (e.g. well head, mercury transfer).
   Description of container (e.g. 10cc, 25cc, 675cc).
   Disposition of sample (e.g. not used, split in lab).
   Cross reference information.

2.2 Sample handling for fluid involves the above steps for handling gas samples after the samples have been split as follows:

UNCONTROLLED DOCUMENT

Figure 7 Chain of Sample Custody Form

Corporation

Grand Junction Operations

Mailing Address
P.O. Box 1569
Grand Junction, CO 81502

Street Address
2597 B¼ Road
Grand Junction, CO 81503
Phone (303) 242-8021

Page ____ of ____

Date ____

Chain of Sample Custody

1. Project No. ____ 2. Project Name ____ 3. BFEC Request Nos. ____

4. Sample No.	5. Sample Type	6. Remarks

7. Relinquished By	Date	Dept.	Received By	Date	Dept.

8. Company Name ____

Received By ____

Date ____

Distribution: Original accompanies samples, copies to relinquishers.

See Instructions on Back

UNCONTROLLED DOCUMENT

Figure 8 Sample History Document

BENDIX FIELD ENGINEERING CORPORATION
Sample History Document

Well _____ Zone _____

Collection Date _____ Time _____

			Sample Ticket No.
Type of Sample	_____Fluid	_____Volume	
	_____Gas	_____Volume	_____
Originating Sample	_____Fluid	_____Volume	
	_____Gas.	_____Volume	_____
	_____N/A		

Date of Splitting to Gas Phase _____ Record _____

Total Volume of Original Gas Phase _____ Record _____

(a) = approximate
(e) = exact (± 1%)

UNCONTROLLED DOCUMENT

Completed by _____

Date _____

Figure 9 Page from Sample Inventory Catalog

SAMPLE DESCRIPTION	SAMPLE TYPE	FIELD COLLECTION DATE/TIME	DESCRIPTION OF CONTAINER	TYPE OF SAMPLE	SUBSEQUENT DISPOSITION	CROSS REFERENCE INFORMATION
J. Friemel #1 Zone 7 675cc Lestertiß Down hole Pres. 1316 Transfer Pres. 1300 D.H. Temp. 180.8 Surf.Temp. 46 Depth 5770 Perf. 5825-5926 Tracer (0.3ppm Downhole Trip #6 Dry Wt. 16720gm Wet Wt. 17545gm MMH082	Hg Trans.	840124 1035	675cc	Liquid	Split as noted below	p. 88-90 SM-1
MMS319	Blank	840127	25cc	Gas	Expended for analysis	p. 139 MS-II Samp. 1453
MMS321	Gas Split	840127	25cc	Gas	Not Used	
MMS321	Gas Split	4984 0127	25cc	Gas	Expanded to 25cc cyld 1x Balance saved	p. 142-144 MS Samp. 1464-70
J. Friemel #1 Zone 7 Field Split Down hole Pres. 1356 Transfer Pres. 1500 D.H. Temp. 183.8 Surf.Temp. 77 Depth 5770 Perf. 5825-5926 Tracer (0.3ppm Downhole Trip #2 MMH076	Gas Split	840123 1500	25ccc	Gas	Not Used	
MMH077	Gas Split	840123 1600	25cc	Gas	Not Used	
MMH078	Gas Split	840123 1600	25cc	Gas	Not Used	
MMH079	Gas Split	840123 1600	25cc	Gas	Removed 2 slugs for analysis Balance saved	p. 4-5 MS-III Samp.
MMH081	Blank	840123 1400	10cc	Gas	Not Used	
J. Friemel #1 Zone 7 Surface Flow Thru Downhole Temp. 181.8 Downhole Press. 1688 Surf. Temp. 5 Flowthru Press. 400-525 Closing Press. 525 MMH051	Well Head	840118 1745	25cc	Liquid	Split as noted below	p. 138 MS-II
MMS315	Blank	840127	25cc	Gas	Expended for analysis	p. 139 MS-II Samp. 1454
MMS316	Gas Split	840127	25cc	Gas	Six slugs removed for anal. Balance saved	p. 140-141 MS-II Samp. 1456-63
J. Friemel #1 Zone 7 Surface Flow Thru Downhole Temp. 181.8 Downhole Press. 1688 Surf. Temp. 5 Flowthru Press. 400-525 Closing Press. 525 MMH062	Well Head	840119 1340	25cc	Liquid	Transferred to S. Donovan. After possible valve failure cylinder returned to MS Lab	

UNCONTROLLED DOCUMENT

1. Sample Tickets (see Figure 10) are completed for all sample(s) and blank cylinder(s), and the remaining degassed fluid. The Sample Ticket white card is transmitted to the Sample Plant, and the pink sheet is transmitted to the NWTS Project Manager.

Figure 10 Sample Ticket

Do not write in this space.

Sample No.
MNS 127

Refno AASSN

Sampler | Yr Mo Day | Same location as: | Proj. Name | No.

Mend. | Twp | Rng. | Sec. | Latitude | Longitude

N S E W | 1/64 1/16 1/4 | Deg. Min. Sec. | Deg. Min. Sec.

State No. | County No. | Scint. gross: ____ cps net: ____ cps | Spectrometer counts No. GJO | gross K U Th Time

Elev. | Depth | Locality name | Formation:

Sample Type:

☐ ROCK ☐ Chip ☐ Channel ☐ Grab ☐ Core ☐ Cuttings

☐ WATER ☐ Stream ☐ Lake ☐ Well ☐ Spring Temp: ____ pH: ____ Cond: ____

☐ SEDIMENT ☐ Concentrate ☐ Bulk ☐ SOIL Horizon: ____

☐ OTHER (Specify):

COMMENTS:

UNCONTROLLED DOCUMENT

Sample No.
MNS 127

2. Chain of Sample Custody Forms are completed for all sample cylinders, the system blank, and the remaining degassed fluid. These forms are filed in the mass spectrometer lab.

3. The degassed fluid is transmitted to the Sample Plant with the Chain of Sample Custody Form. A copy of the form is retained in the mass spectrometer lab.

4. A Sample History Document is completed and stored with the sample (or blank) cylinder in a box.

5. The Sample Inventory Catalog file is edited to reflect the sample(s) and blank created, the change in status of the original fluid sample, and cross references to detailed information about this sample.

6. The actual conditions of the fluid to gas splitting setup are noted in the Sample Measurement Book and/or the Mass Spectrometer Lab Notebook.

7. Samples no longer needed are transmitted to the Sample Plant with a Chain of Sample Custody Form. A copy of the form is retained in the mass spectrometer lab.

2.1.3 Rock samples are wrapped in aluminum foil and heated in the RF induction furnace to drive off the trapped gas. The gas is then handled as in 2.1.1 except for the following:

1. The Sample Inventory Catalog is edited to enter information concerning the rock sample. Typical information might include:

   Well and formation name.
   Depth of rock sample.
   Sample Ticket Number.
   Date sampled.
   Type of sample (e.g. rock).
   Disposition of sample (e.g. expended for analysis, not used).
   Cross reference information.

2.2 The following steps apply only to samples analyzed on the mass spectrometer:

1. All actual analysis conditions are noted in the Mass Spectrometer Log Book and/or the Mass Spectrometer Lab Notebook, both are kept in the mass spectrometer lab.

2. The Sample Inventory Catalog file is edited to reflect the change in the status of the sample and applicable cross references are added.

3. If the sample is totally consumed, this is noted on the Chain of Sample Custody Form and the original returned to the Sample Plant. A copy is retained in the mass spectrometer lab. Also the Sample History Document is filed in the lab with a note that sample was totally consumed.

2.3 Handling printed output from CHOMP (see Appendix E).

1. Full reports for linear and exponential extrapolation are

UNCONTROLLED DOCUMENT

evaluated to determine the parameter(s) to be used in FILER. The parameters chosen will be written on the front of the CHOMP output and also in the Data Reduction Notebook for the sample. The reports are permanently filed in a binder for the particular well and zone.

2. The summary linear extrapolation report is permanently filed in a binder named Linear Extrapolation, Volume (number). periodically, these are transfered to permanent storage in accord with procedures of the Quality Assurance office.

3. The summary exponential extrapolation report is permanently filed in a binder named Exponential Extrapolation, Volume (number). Periodically, these are transferred to permanent storage in accord with procedures of the Quality Assurance office.

2.4 Handling printed output from FILER (see Appendix E).

The printed output from FILER is-taped into a Data Reduction Notebook containing sample information for the associated borehole. The parameters chosen for the FILER run and any file(s) created are also listed.

UNCONTROLLED DOCUMENT

012 PROGRAM PROTECTION AND CHANGE CONTROL

1.0 Purpose

This procedure gives instructions for the protection of the computer program that is used to acquire data from the mass spectrometer at Bendix/GJO and has been verified as acceptable for use on ONWI-NWTS projects.

1.1 Application

This procedure will be used by the program user in protecting any HP/9825 computer code that is used to acquire data from the mass spectrometer and has been verified as acceptable for ONWI-NWTS projects.

In this procedure any reference to an individual by title is intended to include the individual's formal designee as well.

1.2 Definitions

Verification is defined for this purpose as a test that determines if the program produces correct results.

Program user is defined as any user of a program. The user is responsible for ensuring that a program used to produce project information has been verified and protected in accord with procedure QA-15.

1.3 Associated Materials

ONWI-NWTS Quality Assurance Manual Part 2, procedure QA-15, Rev. 1, Verification and Validation of Computer Programs.

NUREG-0856, Final Technical Position on Documentation of Computer Codes for High-level Waste Management, June 1983.

Control Document for Computer Program (form QF-114)

1.4 General Information

A computer program that requires verification must be protected to ensure that all modifications are authorized, documented, and tested before any new version is used for official project activities. This program protection and change control procedure satisfies this requirement by implementing applicable provisions of Verification and Validation of Computer Programs, QA-15, Rev. 1 in a manner appropriate for the HP/9825 computer used for acquisition of mass spectrometer data.

The HP/9825 computer is dedicated to the mass spectrometer. The HP/9825 program performs the following functions:

UNCONTROLLED DOCUMENT

Drives the mass spectrometer electronics

Finds the centroid of the peak(s) being analyzed

Acquires data for the peak(s) being analyzed

Calculates isotope ratios - this information is only used as a preliminary check and is not used for ONWI-NWTS project reports. Hence it does not require verification.

Records data on cassette tape in verify-mode

The initial verification of the program for data acquisition will be performed by testing it in aggregate with the CHOMP and FILER programs executed by the HP/1000 computer and by an alternate calculation for finding the peak height using the chart recorder.

1.5 General Procedure

Since the HP/9825 computer does not provide any means of placing the program under protection by an individual independent of the project it will be protected by other measures. The program will be checked for alteration each time the program is used by verifying that the checksum of the program being executed is the same as the checksum of the program at the time of verification or reverification. The results of this check will be noted on the paper tape output of the HP/9825 and documented in the mass spectrometer lab notebook.

When modification of the HP/9825 program is necessary, it will be reverified, a new checksum value will be recorded in the mass spectrometer lab notebook, and a Control Document for Computer Program will be completed and signed by the program user and the Quality Assurance Coordinator and filed in the project records.

To prevent unintentional or undocumented use of the old version, the version number will be printed on the paper tape which is the output of the program. The version number will appear on the Control Document for Computer Program and the Verification and Validation of Computer Program worksheet. Thus for all mass spectrometer computer output the version of the HP/9825 program used to acquire data can be identified.

UNCONTROLLED DOCUMENT

Appendix A

Schematic Drawing of BFEC Mass Spectrometer System

System for separation and analysis of brine and rock samples. Portions of the system bound by defining volumes are of stainless steel construction with ceramic electrical feed throughs with the exception of the RF induction furnace and sample loading port, which are of glass. For analyzing rock samples, the two valve assembly used for gas phase samples is disassembled to allow installation of the furnace. The Pyrex® housed furnace is a modified version of equipment described by Kirsten (1966). The mass spectrometer is a 60° - 10cm radius instrument manufactured by Nuclide Corporation.

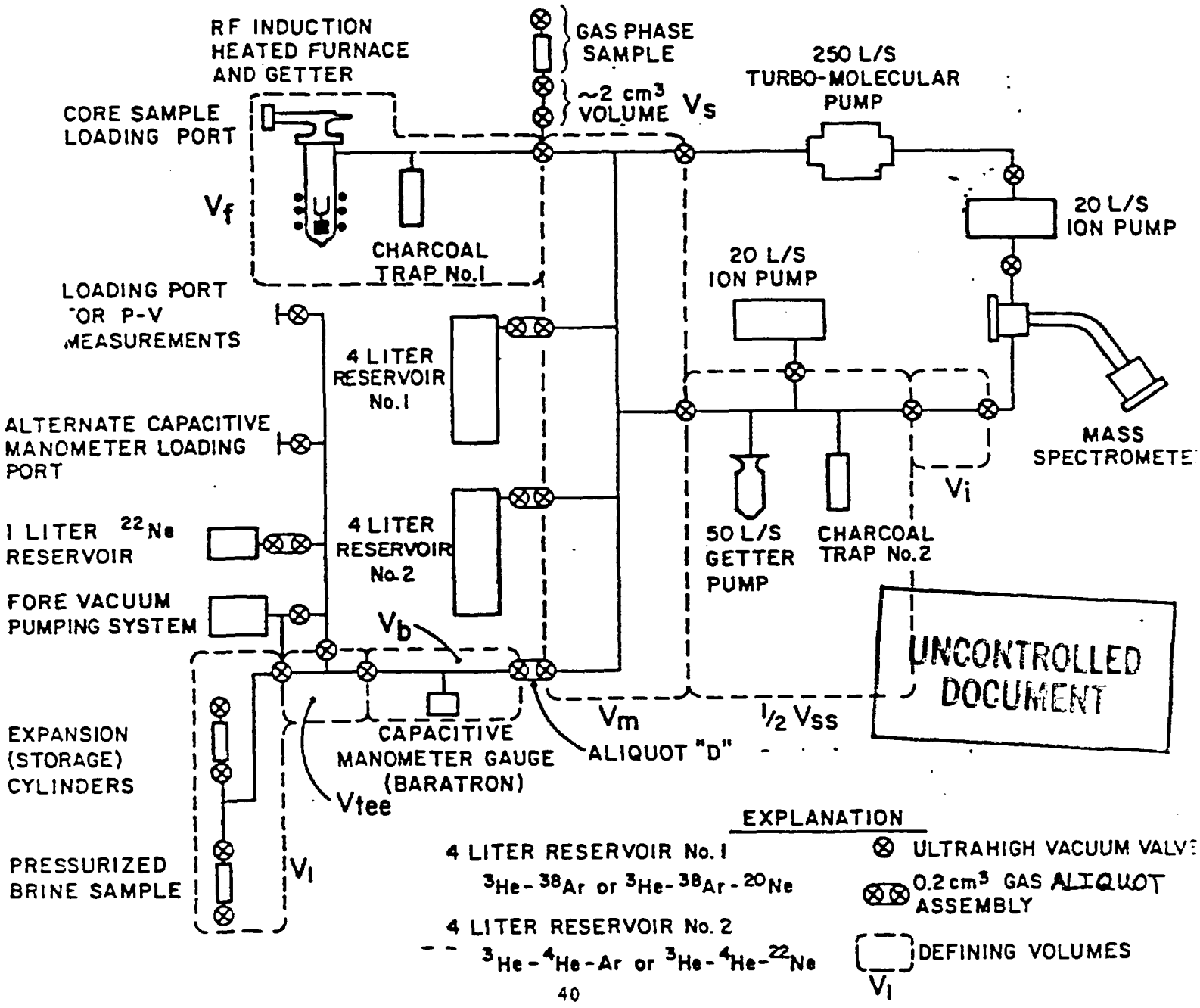

Appendix B - Nomenclature

These terms and definitions will clarify the other items described.

Aliquot - A small volume between two valves. In the system diagram in Appendix A - these are shown as X X . V_o is considered to be an aliquot for these procedures.

Baratron® - A capacitive manometer gauge.

Data Reduction Notebook(s) - This series of notebooks contains the FILER output and additional manual calculations performed on the data.

DI - indicates dry ice - alcohol or dry ice - acetone mixture and is used as a cryogen.

LN_2 - An abbreviation for liquid nitrogen - a cryogen.

Mass Spectrometer Lab Notebook - This notebook contains additional relevant information not written in the Mass Spectrometer Log Book.

Mass Spectrometer Log Book - This notebook contains relevant information for each individual mass spectrometer run. It is in a "chart" format and all blanks are to have information written in them at sometime during the data analysis. (See Table 1)

Sample Measurement Book - This notebook contains data relevant to samples obtained and split in the mass spectrometer lab.

T_o (T_{zero}) - Time-zero is established at the time the voltage is applied to the filament in the mass spectrometer. During data reduction, the value of the peak being analyzed is extrapolated back to T_o using either a linear or exponential fit for the reference peak. Ratios can be extrapolated using linear, average, quadratic, or a combination of linear and quadratic.

Admit Aliquot - At the start of this operation, all aliquot valves are closed. Open the valve on sample-side of the aliquot. Allow the gas to equilibriate (1-2 min.). Close the sample-side valve. Open the system-side valve. Allow the gas to equilibrate (1-2 min.). Close system-side valve. If another aliquot is needed, check that both aliquot valves are closed, then repeat this procedure.

Evacuate intervening volume of (named aliquot) - At the start of this operation, both aliquot valves are closed and the sample system is being pumped. Open the system-side valve (1-2 min.). Close the system-side valve.

Evacuate (named volume) - Open valve(s) to the ion pump or Turbo molecular pump.

UNCONTROLLED DOCUMENT

Evacuate helium fraction from mass spectrometer - Open the valve to system or mass spectrometer ion pump (2 min.). Close the valve between V_1 and $1/2V_{ss}$. Open the valve not opened previously, i.e. valves to both ion pumps are open, but separated by the closed valve between V_1 and $1/2V_{ss}$.

Expand gas from (volume 1) to (volume 2) - Open the valve between the two named volumes.

Getter to nV - The controller for the SAES getter is slowly increased to the stated voltage.

Install (named cryogen) on Charcoal Trap No. (n) - The appropriate cryogen [either liquid nitrogen (LN_2) or dry ice-alcohol (DI)] is slowly positioned around the charcoal trap specified.

Install and leak test (using fore vacuum system) - If Swagelok® parts are being joined, make sure all cones and nozzles are clean and that they fit well before joining. If Conflat® parts are being joined, make sure knife-edges are clean and smooth, and use a new, clean copper gasket. Assemble the necessary cylinders and hardware as needed. Note the actual configuration used in the Sample Measurement Book. (This book can also be used for examples of how to assemble hardware.)

Once all fittings are tightened, isolate Baratron and evacuate on fore pump (5-20 min.). Open Baratron valve (V_B) and evacuate system until a pressure of 0 torr is achieved, this may take a few hours.

To perform the leak test, close all valves up to the fore pump valve. Note the closing pressure in the Mass Spectrometer Lab Notebook. Allow the system to stand static over night, or for at least 4 hours. Close fore the pump valve. Note the Baratron® pressure reading in the Mass Spectrometer Log Notebook as each successive valve is opened and allowed to equilibrate.

If pressures are relatively constant, the system is sufficiently sealed. Pump the fully opened system with the fore pump 10 - 15 minutes before proceeding. If pressures increase rapidly with any valve opening, it is necessary to retighten (or take other necessary steps) and then repeat pump-down, etc. Professional judgement is needed to determine if the system is adequately sealed.

Install and leak test (using ultrahigh vacuum system) - Fittings are to be assembled and checked as for fore vacuum system.

Once the fittings are tightened, isolate $1/2V_{ss}$ from V_m. With V_m on turbo molecular pump, very slowly open the valve to V_m and evacuate for several hours.

UNCONTROLLED DOCUMENT

To perform leak test, close all valves external to V_o valve, allow to stand static for several hours or overnight. Note UHV pump pressure, then slowly open each successive valve, noting pressure and evacuating between steps. Professional judgement is needed to determine if the system is adequately sealed.

Isolate gas in mass spectrometer - Have mass spectrometer and HP9825 on line. Settings are variable, but some typical values are:

	Helium	Neon	Argon
Elec. Acc. Potential	65eV	45eV	65eV
Ion Acc. Potential	3000V	3000V	2000V
Elec. Mult. Potential	3.3	4.5	3.6
Meter Range	100V	100V	100V
HP9825 Coefficients	C2	C2	C1
Magnet Regulator	4.5	44.5	40.5

Isolate the mass spectrometer from the mass spectrometer ion pump. Reduce the ion accelerating potential to 0V. Set the ion gauge pressure range to 10^{-4}. Slowly open the valve to allow gas to enter mass spectrometer. (This valve will be one of the valves enclosing $V_{i.}$) While opening valve, observe the pressure on the ion gauge. Professional judgement is needed at this point to determine if the amount of gas is correct. Set the ion gauge control to the "Float" position. Allow the gas to equilibrate -- typical equilibration times are:

Helium 2 - 3 minutes
Neon 3 - 4 minutes
Argon 4 - 5 minutes

Isolate gas in (named volume) - Close all valves to the named volume

Isolate system from pumps - Close valve(s) to ion pump or turbo molecular pump. System should be in a static (no pumping) condition.

Isolate (volume 1) from (volume 2) - Close valve(s) between two named volumes.

Log off HP1000 - Type "EX,SP" to exit the HP1000 and save all private cartridges. The HP1000 will not allow the user to exit without saving private cartridges.

Log on HP1000 - Press any key on the HP2648 terminal. The HP1000 responds with "BFEC/DOE HP-1000-->". Enter the following "BONNIE.MSPEC" <CR>. The HP1000 requests that the user enter the "PASSWORD?". The user must enter the appropriate password to complete the log on procedure.

Measure (named gas) - After the gas has equilibrated in the mass spectrometer, increase the ion accelerating potential to the proper voltage for gas being analyzed (3000 for He and Ne, 2000 for Ar). Press T_o (T_{zero}) function (f7) on HP9825 to establish time-zero for the experiment.

UNCONTROLLED DOCUMENT

Adjust the magnet regulator and meter range to quickly scan the peaks being analyzed. If pre-established ranges will not work, enter new ranges. Press the "Search" function (f20) and switch the magnet regulator to external mode. The balance of the run is under combined computer and manual control; so perform the steps as directed.

After the analysis, set the magnet regulator to manual mode and scan for mass 2 for He and Ar analyses or mass 18 for Ne analyses. Record the peak value and electrometer range in the Mass Spectrometer Log Book. Set the ion gauge control to regulated mode and determine P_{ms} (mass spectrometer pressure). Record this value in the Mass Spectrometer Log Book.

Open valve to mass spectrometer ion pump. Close the valve between $1/2V_{ms}$ and V_1. Return the sample system to the pumping system, remove any cryogens from charcoal traps, and set the SAES getter to 5 volts.

<u>Measure (named gas) using high sensitivity electrometer</u> - After the gas has equilibrated in the mass spectrometer, increase the ion accelerating potential to the proper voltage for gas being analyzed (3000 for Ne). Press T_0 (T_{zero}) function (f7) on HP9825 to establish time-zero for the experiment.

Determine the range scales of ^{20}Ne - ^{21}Ne - ^{22}Ne measurements. Record ^{20}Ne - ^{22}Ne - ^{40}Ar - $^{44}CO_2$ ion currents on the Neon Analysis form (see figure 13). Center mass 20 peak by directing magnet regulator to mass 20 (using m -B function on the HP9825) and adjusting the source high voltage. Engage the high voltage switch lock. Check centering of mass peak using m -B function (direct magnet regulator to 20.05 and 19.95). Refine high voltage adjustment, if necessary by repeating steps 6-8. Start automated data acquisition by pressing BEGIN. The balance of the run is under control; so perform the steps as directed.

After the analysis, set the magnet regulator to manual mode and scan for masses 18, 20, 22, 40 and 44 and record on the Neon Analysis form. Set the ion gauge control to regulated mode and determine P_{ms} (mass spectrometer pressure). Record this value in the Mass Spectrometer Log Book.

Open valve to mass spectrometer ion pump. Close the valve between $1/2V_{ms}$ and V_1. Return the sample system to the pumping system, remove any cryogens from charcoal traps, and set the SAES getter to 5 volts.

<u>Perform volume determinations</u> - Close the valve between the expansion cylinders and V_{tms}. Close the valve to the fore pump. Note the Baratron® pressure. Fill all expansion cylinders with nitrogen at atmospheric pressure. Close all expansion cylinder valves. Now expand each successive expansion volume to the Baratron®, note its pressure, and then evacuate the gas. Repeat this entire process three times making notes in Mass Spectrometer Lab Notebook.

<u>Preserve degassed liquid</u> - Any fluid remaining after the degassing process is transferred to a poly-bottle and labeled. A Sample Ticket and Sample

UNCONTROLLED DOCUMENT

Figure ~~13~~ 11 Neon Analysis Form

$^{40}Ar-^{44}CO_2$ Data

for

Neon Analysis

Sample _____

Date _____

Title _____

Electrometer readings at T_0

^{20}Ne = _____

^{22}Ne = _____

^{40}Ar = _____

$^{44}CO_2$ = _____

$^{40}Ar/^{20}Ne$ = _____

$^{44}CO_2/^{22}Ne$ = _____

Electrometer readings at T_f

$^{18}H_2O$ = _____

^{20}Ne = _____

^{22}Ne = _____

^{40}Ar = _____

$^{44}CO_2$ = _____

$^{40}Ar/^{20}Ne$ = _____

$^{44}CO_2/^{22}Ne$ = _____

UNCONTROLLED DOCUMENT

by _____

Appendix C - References

Dalrymple, G.B. and Lanphere, M.A. (1969) Potassium-Argon Dating. W.H. Freeman and Company, San Francisco, 258 pp.

Mazor, E., Heymann, D., and Anders, E. (1970) Noble gases in carbonaceous chondrites. Geochim. Cosmochim. Acta 34, 781 - 824.

Podosek, F.A. (1970) Dating of meteorites by the high temperature release of iodine-correlated Xe^{129} Geochim. Cosmochim. Acta 34, 341-365.

Reynolds, J.R. (1956) High sensitivity mass spectrometer for noble gas analysis. Rev. Sci. Inst. 27, 928.

Schaeffer, O.A. and Zahringer, J. (1966) Potassium Argon Dating, Springer-Verlag, NY, Inc., 234 pp.

Zaikowski, A. and Schaeffer, O.A. (1979) Solubility of noble gases in serpentine: implications for meteoritic noble gas abundances. Earth Planet. Sci. Lett. 45, 141-154.

UNCONTROLLED DOCUMENT

Appendix D - CHOMP Options

Notation: *> is the prompt displayed by CHOMP. You do not enter it, but begin entering the command after it is displayed. Only the first two letters of each command are needed for recognition, but more may follow for clarity as in the examples. In the examples below, UPPER CASE indicates literal values entered in exactly as shown, while lower case denotes values of parameters which depend on what you want (e.g., numeric values). The term "free-format" means numbers entered as you would read them, separated by commas. Be sure not to put a comma between a command and the first parameter, but other characters are okay (except /). The term "default" means what happens if you don't enter something.

COMMAND	USUAL CHOICES	ACTION
*>CTRL-D		Stop asking for options. Start reading data.
*>AB		Abandon job.
*>AUTO	default	Automatic deletion of points disabled. This refers to the error flag on the isotope code. Default is "enabled".
*>DEL n,m,l,...	not used	Delete points #n, m, l, etc. Limit of 20 points deleted per command, 75 total.
*>DISCR lu	default	Discrimination constants will be obtained from unit #lu. lu=5 for tape reader, 2 for disc (file). Default=0. (0 means discrims.=1.0±0.0)
*>DRT	default	Dirt peak pages to be printed. A dirt peak is a peak with the same mass to charge ratio, i.e. $^{40}Ar^{+}$ is a dirt peak for $^{20}Ne^{+}$. (Default, unless *>SUMM was entered)
*>DUMP		Input data to be dumped (printed as read). (Default, unless *>SUMM was entered.)
*>END		Stop asking for options. Start reading data.
*>EQ n,m	not used	Equivalence mass number m to isotope code #n. Use m>0 to define isotopes (ratios taken), m<0 for "dirt", and set m=0 to ignore the peaks.
*>FILE OUTPUT		Store final results (i.e., summary page) in an output file, suitable for

UNCONTROLLED DOCUMENT

		input to FILER program. (Default: no file)
*>GAIN g1,g2...	default	Set gain scales to factors g1 through g8 for gain codes 1 thru 8, respectively. These are entered in free format. (Default values set in segment CHMP1 to most recent values measured.) Caution: entry is limited to 70 characters in length.
*>INPUT		Input page to be printed, listing the data as interpreted. (Default, unless *>SUMM was entered.)
*>LIN		Linear interpolation of reference for ratio computations. (Default is exponential.)
*>NORM n	default	Normalize all peaks to input resistor. (Default is to use the most common one.) Here n=1, 2, 3, or 4.
*>PLOT n	n=1	Plot as follows: n=-1 No plots (the default) n=0 Plot reference only n=1 Plot reference and ratios n=2 Plot reference, ratios and dirt.
*>RATIO		Ratio pages to be printed. (Default, unless *>SUMM was entered.)
*>REF		Reference page to be printed. (Default, unless *>SUMM was entered.)
*>SUMM		Summary page only. Summary page is always printed. Default is to print all others as well. Follow this command with *>DRT, *>DUM, *>INP, *>RATIO, or *>REF to re-enable the corresponding pages selectively.
*>TEST	default	Test printout (for debugging) is requested. (Default is to suppress it.)
*>TI, your title		Optional header for title at top of page. Automatic centered. Only what follows the first comma is used.

UNCONTROLLED DOCUMENT

Appendix E - Naming Conventions and Typical Data Flow

The naming conventions listed here are suggestions only as they may not be convenient to use for many other measurements.

A. For Samples

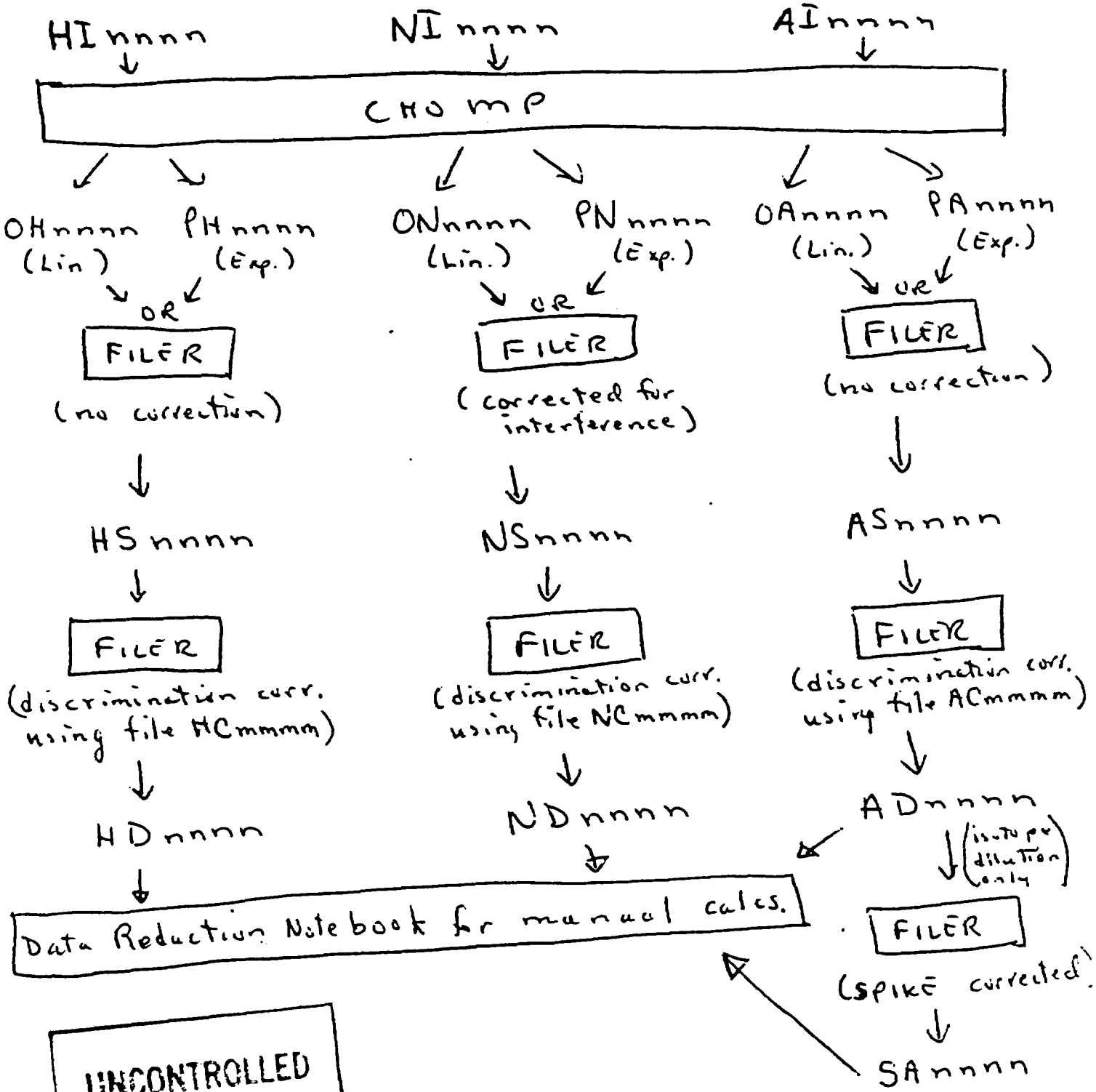

UNCONTROLLED DOCUMENT

The naming conventions listed here are suggestions only as they may not be convenient to use for many other measurements.

B. For Calibrations

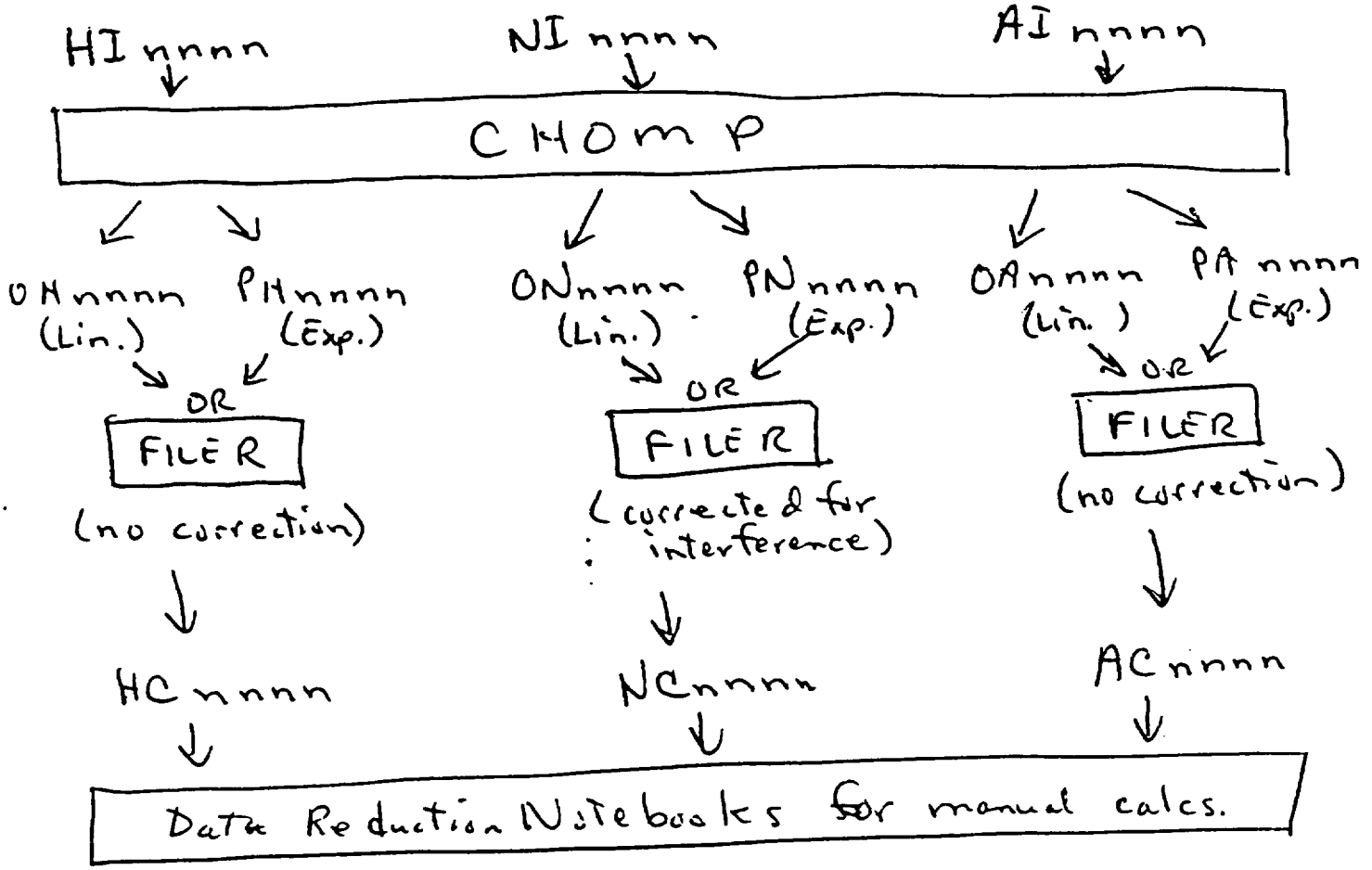

UNCONTROLLED DOCUMENT

Appendix F - Function Keys on HP9825

S=> Shifted functions
(i.e., press shift
key and function
key)

Key	Description
0	Computes B (magnet setting) for given m (mass)
1	Print current B value
2	Stopwatch function
3	Enter scanning rate
4	Start upward scan
5	Start downward scan
6	Asks for number of setup to be loaded
7	Establishes Time zero (T_o)
8	Start actual run
9	Perform all necessary calculations. If the experiment is stopped prematurely, this allows user to obtain the results for the experiment up to time of stopping.
10	Initiate code to transfer files from HP9825 to HP1000 for eventual data reduction by CHOMP.
11	Record data currently in memory. Used for prematurely halted experiments.
12	Compute m (mass) for a given B value (magnet setting).
13	Perform B vs m (magnet setting vs mass) calibration
14	Load first set of coefficients
15	Load second set of coefficients

UNCONTROLLED DOCUMENT

16 Print title and file number of data sets recorded on HP9825 data tape

17 Reload user selected data file into memory

18 List details of current set up

19 Allow user to enter and, optionally, record details of a new setup

20 Initiate search routine to find the centroid of a peak

21 List program constants of HP9825 to HP2648 terminal. This allows program editing on HP2648 before returning to HP9825

22 Computes mean and standard deviation for user entered values. Also lists number of values and 95% confidence level standard deviation

23 Prints current values for m (mass) and B (magnet setting)

UNCONTROLLED DOCUMENT

Appendix G - Handling of BWIP Records

1.0 Purpose

The following procedure details the steps taken to authenticate and transmit records relevant to the BWIP project.

2.0 Definitions

The nomenclature used in this procedure is self-explanatory.

3.0 Procedure

1. Authenticate all records by dating and signing or initialing them.

2. Make two copies of each record relevant to BWIP and file them in the file safe.

3. Do the following on the first working day of each month. (If absence of lab personnel is expected on the first working day, the following should be done before the first working day and upon return to prevent from storing records more than one month.

   a. Obtain the Project Manager's records for the preceding month.

   b. Write memos to the file explaining omitted pages in notebooks, logbooks, and/or CHOMP files that were omitted because they were not relevant to BWIP.

   c. Fill out and sign "Records Transmittal" form.

   d. Transmit all records, memos, and transmittal forms to the QA Coordinator for confirmation. The QA Coordinator will transmit the records to Rockwell Hanford Operations.

4. File signed copy of "Records Transmittal" form.

UNCONTROLLED
DOCUMENT

Table 1
Information entered in the Mass Spectrometer Log Book

1. Sample
2. Baritron Pressure (if applicable)
3. Reservoir / Aliquot
4. Fraction of sample
5. Multiplier Gain
6. Set up number (9825)
7. Title (9825)
8. Data file (9825)
9. Data file (2648)
10. CHOMP file
11. P_{ms} - Mass Spectrometer Pressure (if applicable)
12. Cryogen
13. Comments - operator

UNCONTROLLED DOCUMENT

United States Government

Department of Energy

Grand Junction Projects Office

memorandum

DATE: December 2, 1986

SUBJECT: DATA, ISOTOPIC STUDY NOBLE GASES PALO DURO BASIN BRINES

TO: Jo-Ann Sherwin, Chief, Site Evaluation, SRPO/Columbus

Copies of the figures and tables from the report on the "Isotopic Study of Noble Gases in Palo Duro Basin Brines", and an uncontrolled copy of the technical procedures which were utilized are being forwarded to Susan Heston at her request. Also, attached is Charles Jones' transmittal letter.

R. Eldon Bray
Project Engineer

Attachments:
As stated

cc: K. Falconer - UNC
S. Heston - SRPO
C. Jones - UNC
B. Mukhopadhyay - ONWI

12-2mem/bray

UNC INCORPORATED Service Through Technology

UNC Technical Services Inc.
P.O. Box 14000
2597 B¼ Road
Grand Junction, Colorado 81502-5504

303/242-8621

November 28, 1986

Mr. R. Eldon Bray
Project Engineer
Department of Energy
Grand Junction Projects Office
Grand Junction, Colorado 81502

Dear Mr. Bray:

SUBJECT: SRPOs REQUEST FOR DATA AND TECHNICAL PROCEDURES FROM ISOTOPIC STUDY OF NOBLE GASES IN PALO DURO BASIN BRINES

Attached are copies of figures and tables that contain the data requested. As requested by Ms. S. Heston, SRPO, by phone on November 24, no text or explanation is included; just data.

Also attached is an uncontrolled copy of technical procedures used to analyze the water samples and obtain the aforementioned data.

Sincerely,

Charles A. Jones
Director
CRWM Projects Division

CAJ:ab
Attachments: (2)

cc K. Falconer (w/data only) KLF
D. Riddle (w/data only)
A. Zaikowski (w/data only)
R. Spangler (w/data only)

Table 4-1. Helium and Argon Data for Individual Brine Samples

DRAFT

Well Sampled/Zone No. Sample Type Sampling Method Date Collected	Formation and Perforated Interval (feet)	^{4}He $\left(10^{-5}\frac{cm^3\ STP}{cm^3\ fluid}\right)$	^{36}Ar $\left(10^{-8}\frac{cm^3\ STP}{cm^3\ fluid}\right)$	$\frac{^{38}Ar}{^{36}Ar}$	$\frac{^{40}Ar}{^{36}Ar}$	$^{40}Ar^{*}$ $\left(10^{-5}\frac{cm^3\ STP}{cm^3\ fluid}\right)$	$\frac{^{4}He}{^{40}Ar^{*}}$
Sawyer #1/Zone 4	Granite Wash						
1. 50-cm³ Cylinder Mercury Transfer 8 May 1982	4258–4342	178±6 179±6	29.9±0.6	0.188 ±0.003	1564±16 1557±15	37.7	4.71
Sawyer #1/Zone 5	Wolfcamp						
2. 25-cm³ Cylinder Mercury Transfer 14 June 1982	3172–3190	228±9 223±9 219±9	161±4 158±4	0.185 ±0.003	433±6 426±6	19.4	11.5
Mansfield #1/Zone 1	Wolfcamp						
3. 25-cm³ Cylinder Mercury Transfer 27 August 1982	4818–4890	361±13 356±13	85.4±3.5	0.173 ±0.007	695±8 686±8	33.3	10.8
4. 25-cm³ Cylinder Mercury Transfer 27 August 1982		279±11	40.9±1.6	0.184 ±0.005	744±7	18.3	15.3
Mansfield #1/Zone 2	Wolfcamp						
5. 25-cm³ Cylinder Mercury Transfer 30 September 1982	4514–4638	544±14	158±7	0.179 ±0.006	567±6 555±6	43.0	12.6
6. 25-cm³ Cylinder Mercury Transfer 1 October 1982		155±15	66.4±6.5	-	554±5	17.1	9.1
7. 10-cm³ Cylinder Flow Through 29 September 1982		186±9	51.1±2.0	0.182 ±0.006	788±8	25.2	7.35
Zeeck #1/Zone 1	Pennsylvanian Carbonate						
8. 10-cm³ Cylinder Flow Through 7 December 1982	7140–7230	162±8	25.2±1.3	0.184 ±0.005 0.212 ±0.025	486±6 494±6	4.89	33.1
9. 675-cm³ Cylinder #5 Mercury Transfer 17 December 1982		243±25	25.8±2.6 26.6±2.7	0.186 ±0.005	498±6 497±6	5.31	45.7
Zeeck #1/Zone 2	Wolfcamp						
10. 675-cm³ Cylinder #4 Mercury Transfer 19 January 1983	5603–5640	68.0±7.0	92.0±9.5	0.184 ±0.005	346±5 333±5	4.00	17.0
11. 675-cm³ Cylinder #5 Mercury Transfer 20 January 1983		92.4±9.2	76.1±7.7	-	353±5	4.34	21.3
Zeeck #1/Zone 3	Wolfcamp						
12. 10-cm³ Cylinder Field Split 5 March 1983	5470–5550	367±35 355±35	75.3±7.6	0.188 ±0.005	488±5 518±6	15.6	23.1
13. 10-cm³ Cylinder Flow Through 28 February 1983		211±21	-	0.189 ±0.035	509±8	-	-
14. 10-cm³ Cylinder Flow Through 28 February 1983		328±35	70.8±8.0	-	569±6	19.3	17.0
Friemel #1/Zone 1	Granite Wash						
15. 675-cm³ Cylinder #5 Mercury Transfer 7 July 1983	8168–8204	-	-	-	1929±35	-	-
16. 25-cm³ Cylinder Field Split 6 July 1983		514±40 513±40	44.6±5.0 49.7±5.0	-	1662±30	60.9	8.44
17. 25-cm³ Cylinder Flow Through 5 July 1983		461±25	38.5±3.0	-	2084±30 2099±30	69.4	6.65

Table 4-1. Helium and Argon Data for Individual Brine Samples (continued)

DRAFT

Well Sampled/Zone No. Sample Type Sampling Method Date Collected	Formation and Perforated Interval (feet)	^{4}He $\left(10^{-5}\frac{cm^3\ STP}{cm^3\ fluid}\right)$	^{36}Ar $\left(10^{-8}\frac{cm^3\ STP}{cm^3\ fluid}\right)$	$\frac{^{38}Ar}{^{36}Ar}$	$\frac{^{40}Ar}{^{36}Ar}$	$^{40}Ar^{*}$ $\left(10^{-5}\frac{cm^3\ STP}{cm^3\ fluid}\right)$	$\frac{^{4}He}{^{40}Ar^{*}}$
Friemel #1/Zone 4	Granite Wash 7890–7904						
18. 675-cm³ Cylinder #5 Mercury Transfer 10 September 1983		267±20	50.6±2.5	-	1869±25	79.6	3.35
19. 25-cm³ Cylinder Flow Through 7 September 1983		187±18	36.5±3.0	-	1870±25	57.3	3.26
20. 25-cm³ Cylinder Field Split 8 September 1983		589±60	264±25	-	618±12	88.8	6.63
Friemel #1/Zone 6	Pennsylvanian Carbonate 7300–7326						
21. 675-cm³ Cylinder #5 Mercury Transfer 9 November 1983		269±20	100±5	-	832±12	53.7	5.00
22. 675-cm³ Cylinder #2 Mercury Transfer 10 November 1983		240±25	79.4±4.5	-	984±13	54.6	4.40
23. 25-cm³ Cylinder Flow Through 7 November 1983		420±29	78.7±4.5	-	1123±15	65.0	6.46
24. 25-cm³ Cylinder Field Split 9 November 1983		423±38	117±10	-	697±10	47.0	9.00
Friemel #1/Zone 7	Wolfcamp 5825–5926						
25. 675-cm³ Cylinder #5 Prepump Hg Trans. 21 November 1983		20.9±2.1	106±6	-	571±10	29.0	0.72
26. 25-cm³ Cylinder Flow Through 1 December 1983		-	-	0.186 ±0.006	764±15	-	
27. 25-cm³ Cylinder Flow Through 5 December 1983		523±35	88.7±8.0	-	800±12	39.1	13.4
28. 25-cm³ Cylinder Flow Through 18 January 1984		808±81	83.8±8	0.219 0.030	954±11 949±11	55.1	14.7
29. 675-cm³ Cylinder #5 Mercury Transfer 24 January 1984		204±25	69.6±6.5	0.184 ±0.005	759±10	32.2	6.32
30. 675-cm³ Cylinder #2 Mercury Transfer 24 January 1984		292±30	-	0.200 ±0.010	833±11	-	-
31. 25-cm³ Cylinder Field Split 23 January 1984		473±45	137±13	-	685±10	53.3	8.87
Mansfield #2	Seven Rivers 740						
32. 675-cm³ Cylinder #5 Mercury Transfer 23 June 1983		2.05±0.22	79.7±6.8	-	304±7	-	-

DRAFT

Table 4-2. ^{20}Ne and ^{36}Ar in Individual Brine Samples

Well Sampled/Zone No. Sample Type Sampling Method Date Collected	Formation and Perforated Interval (feet)	^{20}Ne $\left(10^{-8}\frac{cm^3\ STP}{cm^3\ fluid}\right)$	^{36}Ar $\left(10^{-8}\frac{cm^3\ STP}{cm^3\ fluid}\right)$	$\left(\frac{^{20}Ne}{^{36}Ar}\right)_m$ [a]	$^{20}Ne_c$ $\left(10^{-8}\frac{cm^3\ STP}{cm^3\ fluid}\right)$	$^{36}Ar_c$ $\left(10^{-8}\frac{cm^3\ STP}{cm^3\ fluid}\right)$	$\left(\frac{^{20}Ne}{^{36}Ar}\right)_c$
Sawyer #1/Zone 4 1. 50-cm³ Cylinder Mercury Transfer 8 May 1982	Granite Wash 4258-4342	9.45 ± 1.90	29.9 ± 0.6	0.316 ±0.051	-	-	-
Sawyer #1/Zone 5 2. 25-cm³ Cylinder Mercury Transfer 14 June 1982	Wolfcamp 3172-3190	28.1 ± 5.6	158 ± 3	0.178 ±0.030	-	-	-
Mansfield #1/Zone 2 7. 10-cm³ Cylinder Flow Through 29 September 1982	Wolfcamp 4514-4638	23.8 ± 2.5	66.4 ± 6.7	0.359 ±0.070	[7.28]	[34.8]	-
Zeeck #1/Zone 1 9. 675-cm³ Cylinder #5 Mercury Transfer 17 December 1982	Pennsylvanian Carbonate 7140-7230	5.72 ± 0.90	26.6 ± 2.7	0.215 ±0.037	-	-	-
Zeeck #1/Zone 2 10. 675-cm³ Cylinder #4 Mercury Transfer 19 January 1983	Wolfcamp 5603-5640	18.6 ± 2.8	92.0 ± 9.5	0.202 ±0.032	[1.54]	[80.7]	-
11. 675-cm³ Cylinder #5 Mercury Transfer 20 January 1983		22.4 ± 3.3	76.1 ± 7.7	0.294 ±0.047	-	-	-
Zeeck #1/Zone 3 14. 10-cm³ Cylinder Flow Through 28 February 1983	Wolfcamp 5470-5550	17.0 ± 1.7	70.8 ± 8.0	0.241 ±0.036	-	-	-
Friemel #1/Zone 1 16. 25-cm³ Cylinder Field Split 6 July 1983	Granite Wash 8168-8204	26.0 ± 2.1	47.2 ± 7.1	0.551 ±0.127	20.0	35.7	0.560
Friemel #1/Zone 4 19. 25-cm³ Cylinder Flow Through 7 September 1983	Granite Wash 7890-7904	8.03 ± 0.72	36.5 ± 3.0	0.220 ±0.044	-	-	-
Friemel #1/Zone 6 21. 675-cm³ Cylinder #5 Mercury Transfer 9 November 1983	Pennsylvanian Carbonate 7300-7326	17.2 ± 1.2	100 ± 5	0.171 ±0.022	[-1.22]	[65.0]	
23. 25-cm³ Cylinder Flow Through 7 November 1983		19.2 ± 1.5	78.7 ± 4.5	0.244 ±0.029	-	-	-
Friemel #1/Zone 7 27. 25-cm³ Cylinder Flow Through 5 December 1983	Wolfcamp 5825-5926	49.5 ± 4.0	88.3 ± 8.0	0.559 ±0.095	[38.2]	[66.9]	
28. 25-cm³ Cylinder Flow Through 18 January 1984		50.8 ± 4.6	83.8 ± 7.6	0.606 ±0.109	[29.7]	[83.8]	0.355
29. 675-cm³ Cylinder #5 Mercury Transfer 24 January 1984		22.2 ± 2.4	69.6 ± 6.5	0.318 ±0.060	[11.4]	[49.0]	
30. 675-cm³ Cylinder #2 Mercury Transfer 24 January 1984		24.5 ± 2.5	-	-	-	-	-
Mansfield #2 32. 675-cm³ Cylinder #5 Mercury Transfer 23 June 1983	Seven Rivers 740	22.9 ± 2.5	79.7 ± 6.8	0.287 ±0.040			

[a] The values for $(^{20}Ne/^{36}Ar)_m$ are those determined for some of the brines in Table 1. The corrected values for $^{20}Ne_c$ and $^{36}Ar_c$ (in brackets) were calculated assuming that variations of $^{40}Ar/^{36}Ar$ are due to air contamination of the samples. The low values of $^{20}Ne_c$ for samples 10 and 21 indicate that this assumption leads to a correction that is too large. The value for sample 28 was corrected for mass fractionation of ^{20}Ne, assuming that phase separation has enriched both ^{4}He and ^{20}Ne by the same factor (1.7) relative to sample 31 (a field split). Because this correction assumes no ^{4}He diffusion from sample 28, the $^{20}Ne_c$ value of 29.7 is the maximum possible for the Wolfcamp at the J. Friemel site.

DRAFT
DRAFT

DRAFT

Table 4-3. ^{20}Ne and ^{36}Ar in Brines and Comparison Compositions

Well	Formation	^{20}Ne (a)	^{36}Ar (a)	$\frac{^{20}Ne}{^{36}Ar}$
Sawyer #1	Granite Wash	9.45 ± 1.90	29.9 ± 0.6	0.316 ± 0.051
	Wolfcamp	28.1 ± 5.6	158 ± 3.0	0.178 ± 0.030
Mansfield #1	Wolfcamp	23.8 ± 2.5	66.4 ± 6.7	0.359 ± 0.070
Zeeck #1	Pennsylvanian Carbonate	5.72 ± 0.90	26.6 ± 2.7	0.215 ± 0.037
	Wolfcamp	17.0 ± 1.7	70.8 ± 8.0	0.241 ± 0.036
J. Friemel #1	Granite Wash (Zone 1)	26.0 ± 2.1	47.2 ± 7.1	0.551 ± 0.127
	Granite Wash (Zone 4)	8.03 ± 0.72	36.5 ± 3.0	0.220 ± 0.044
	Pennsylvanian Carbonate	17.2 ± 1.2	100 ± 5	0.171 ± 0.022
	Wolfcamp	22.2	69.6	0.318 ± 0.060
Mansfield #2	Seven Rivers	22.9 ± 2.5	79.6 ± 6.8	0.287 ± 0.057
Comparison Compositions (b)				
	Water (0°C)	20.36	167.0	0.121
	Water (26°C)	16.03	93.5	0.171
	Seawater (24°C)	13.57	74.3	0.183
	Saturated Brine (29°C)	4.46	17.6	0.253

[a] ^{20}Ne and ^{36}Ar are in units of 10^{-8} cm³ STP/cm³ fluid.
[b] Noble gas solubilities from laboratory solubility data (Weiss, 1970; Weiss, 1971; Morrison and Johnson, 1954; Smith and Kennedy, 1983) and air composition (Nier, 1950; Eberhardt et al., 1965).

DRAFT

DRAFT

Table 4-4. ^{4}He and $^{40}Ar^{*}$ in Brines

Well	Formation	^{4}He (a)	$^{40}Ar^{*}$ (a)	R_f
Sawyer #1	Granite Wash	179	37.7	4.71
	Wolfcamp	228	19.4	11.5
Zeeck #1	Pennsylvanian Carbonate	243	5.31	45.7
	Wolfcamp	361	15.6	23.1
J. Friemel #1	Granite Wash (Zone 1)	514	60.9	8.44
	Granite Wash (Zone 4)	589	88.8	6.63
	Pennsylvanian Carbonate	423	47.0	9.0
	Wolfcamp	473	53.3	8.87

[a] ^{4}He and $^{40}Ar^{*}$ in units of 10^{-6} cm³ STP/cm³ fluid.

DRAFT

Table 4-5. Helium and Argon in Core Samples

Well Sampled/ Formation/ Zone Number/ Depth (feet)	Rock Type	Extraction Temperature (°C)	^{4}He $\left(10^{-8}\ \frac{cm^3\ STP}{g}\right)$	^{36}Ar $\left(10^{-8}\ \frac{cm^3\ STP}{g}\right)$	$\frac{^{40}Ar}{^{36}Ar}$	$^{40}Ar^{*}$ $\left(10^{-8}\ \frac{cm^3\ STP}{g}\right)$	$\frac{^{4}He}{^{40}Ar^{*}}$
Sawyer #1 Wolfcamp Zone #5 3178	Carbonate	775	3.7 ± 0.4	<0.80	466 ± 8	0.13 ± 0.02	
		1200	<0.03 ±	<0.80	300 ± 4	—	
Totals			3.7 ± 0.4			0.13 ± 0.02	28
Zeeck #1 Wolfcamp Zone #2 5612	Carbonate	1300	2.4 ± 0.3	<0.90	444 ± 6	0.13 ± 0.01	19
Zeeck #1 Wolfcamp Zones #2 and #3 5573	Shale	1200	2.4 ± 0.3	1.08 ± 0.11	3770 ± 43	3.75 ± 0.42	0.64
Zeeck #1 Wolfcamp Zones #2 and #3 5573	Shale	150			265 ± 12		
		300			467 ± 39		
		600			2957 ± 34		
		900			4709 ± 57		
		1100			5673 ± 283		
		1400			1033 ± 74		
Zeeck #1 Wolfcamp Zones #2 and #3 5573	Shale	1400	1.3 ± 0.2			5.70	0.228
Friemel #1 Granite Wash Zone #1 8180	Arkose	1400	66.9 ± 6.7			12.0 ± 1.2	5.58
Friemel #1 Granite Wash Zone #1 8180	Arkose	150			—		
		400			470 ± 14		
		600			3339 ± 63		
		700			8673 ± 204		
		900			6854 ± 109		
		1100			15670 ± 953		
		1300			9898 ± 290		
		1400			1386 ± 22		

DRAFT

Table 4-6. Chemical Composition and R_r Values for Rock Samples

Well Sampled/ Zone Number	Formation/ Depth (feet)	Rock Type/ Sample No.[a]	^{238}U (μg/g)	^{232}Th (μg/g)	^{40}K (wt.%)	R_r
Sawyer #1 Zone #5						
	Wolfcamp	Carbonates				
	3178	MMP 250*	1.1	0.49	0.096	
	3182	MMP 251*	0.9	0.49	0.070	63
	3188	MMP 252*	2.6	0.53	0.072	
	3178	MMP 250**			0.11	
Mansfield #1 Zones #1 and #2						
	Wolfcamp	Carbonates				
	4515	MMP 253*	3.2	0.53	0.11	94
	4532	MMP 254*	2.7	0.81	0.16	54
	4567	MMP 255*	3.0	0.44	0.06	155
	4638	MMP 256*	1.5	0.22	<0.03	>155
	4865	MMP 257*	2.4	0.16	<0.03	>244
	4532	MMP 254**			0.21	
	4881	MMP 258**			0.05	
Zeeck #1 Zones #1 and #2						
	Wolfcamp	Carbonates				
	5481	MMP 259*	3.8	0.77	0.30	40
	5500	MMP 260*	2.0	0.20	<0.03	>205
	5611	MMP 263*	3.5	0.77	0.26	43
	5481	MMP 259**			0.33	
	5611	MMP 263**			0.10	
	Wolfcamp	Shales				
	5574	MMP 261*	3.2	13.4	4.1	4.7
	5580	MMP 262*	1.8	8.9	4.2	2.8
	5630	MMP 264*	2.7	4.5	1.8	6.3
	5660	MMP 265*	2.3	6.5	2.4	4.8
	5679	MMP 266*	2.0	8.9	3.3	3.8
	5574	MMP 261**			4.46	
Western Panhandle (Pierce et al., 1964)	Various	81 Samples Carbonate and Arkose Lithologies	1.0 to 5.0			
Literature Survey of Rock Types (Bowen, 1975)	Various	Shales	3.7	12	2.6	7.6
		Limestone	2.2	1.7	0.27	29
		Sandstone	0.45	1.7	1.1	2.3
Literature Survey and Independent Analysis (Zartmann et al., 1961)	Various	Carbonates, Shells, and Coral	0.01 to 7.5		$<10^{-3}$ to 0.46	

[a]Sample numbers correspond to those contained in reports with petrographic descriptions (Fukui and Dayvault, 1986.)
*Composition determined using counting methods described by J. C. Laul (1984).
**Composition determined using wet chemistry methods described by N. Korte (1984).

DRAFT.
DRAFT

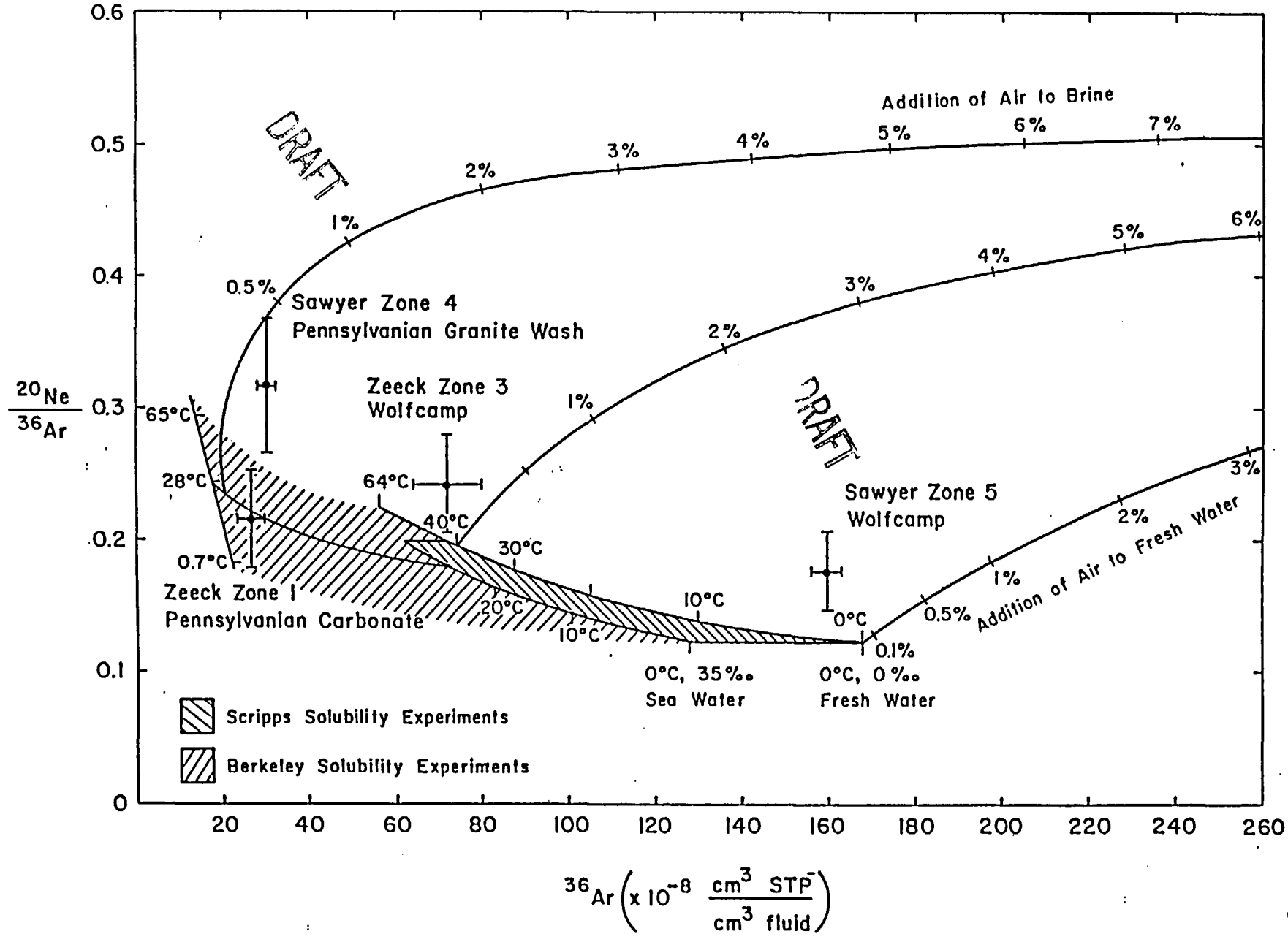

Figure 5-1. Isotopic systematics for ^{20}Ne and $^{20}Ne/^{36}Ar$ in a system where the Ne and Ar are dissolved in fresh water, sea water, and brines of various compositions, and over a range of temperatures for each salinity. Analytical data are shown for brines from the Sawyer #1 and Zeeck #1 wells.

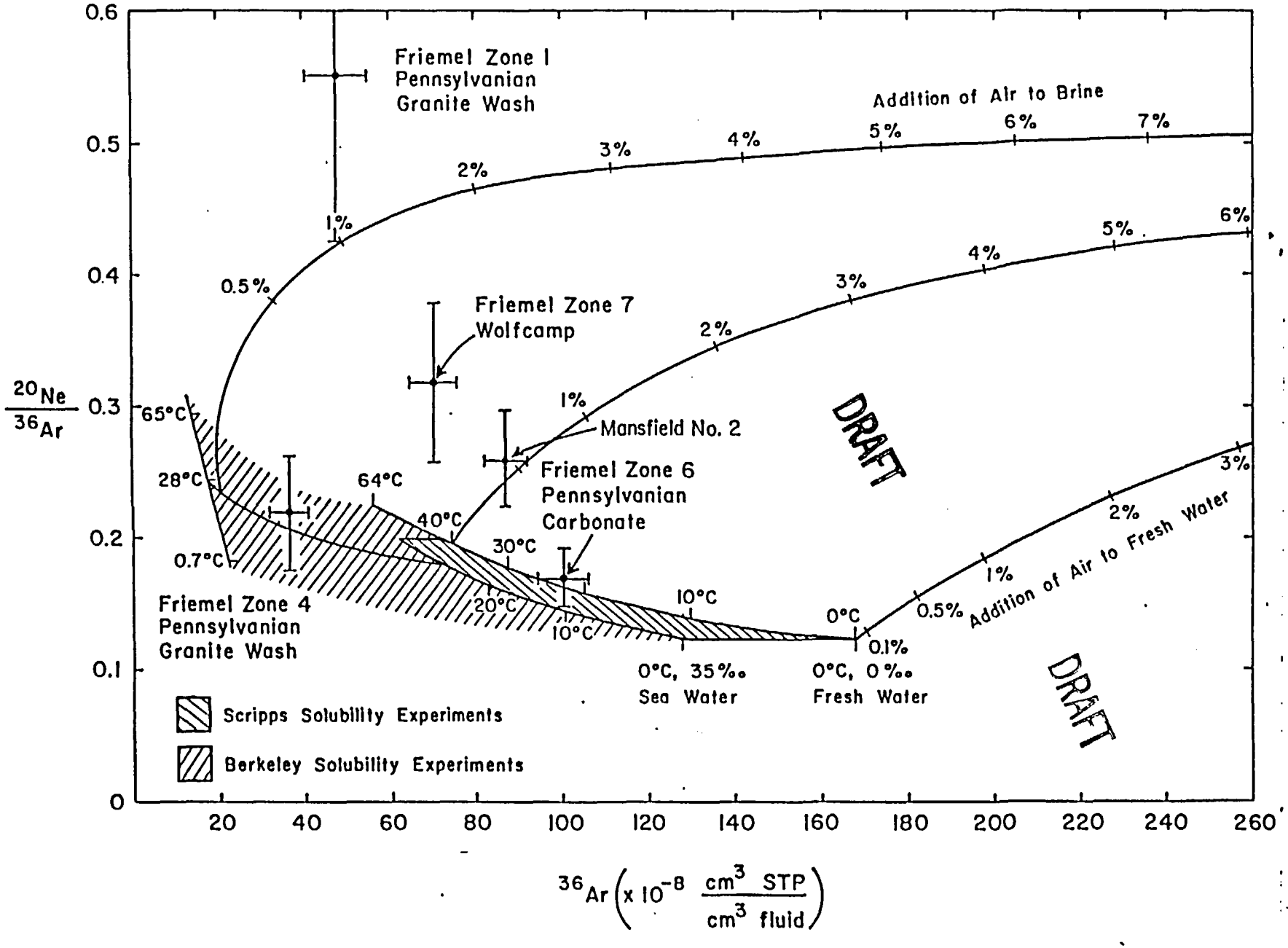

Figure 5-2. Isotope systematics for ^{36}Ar and $^{20}Ne/^{36}Ar$ for brines from the J. Friemel #1 well.

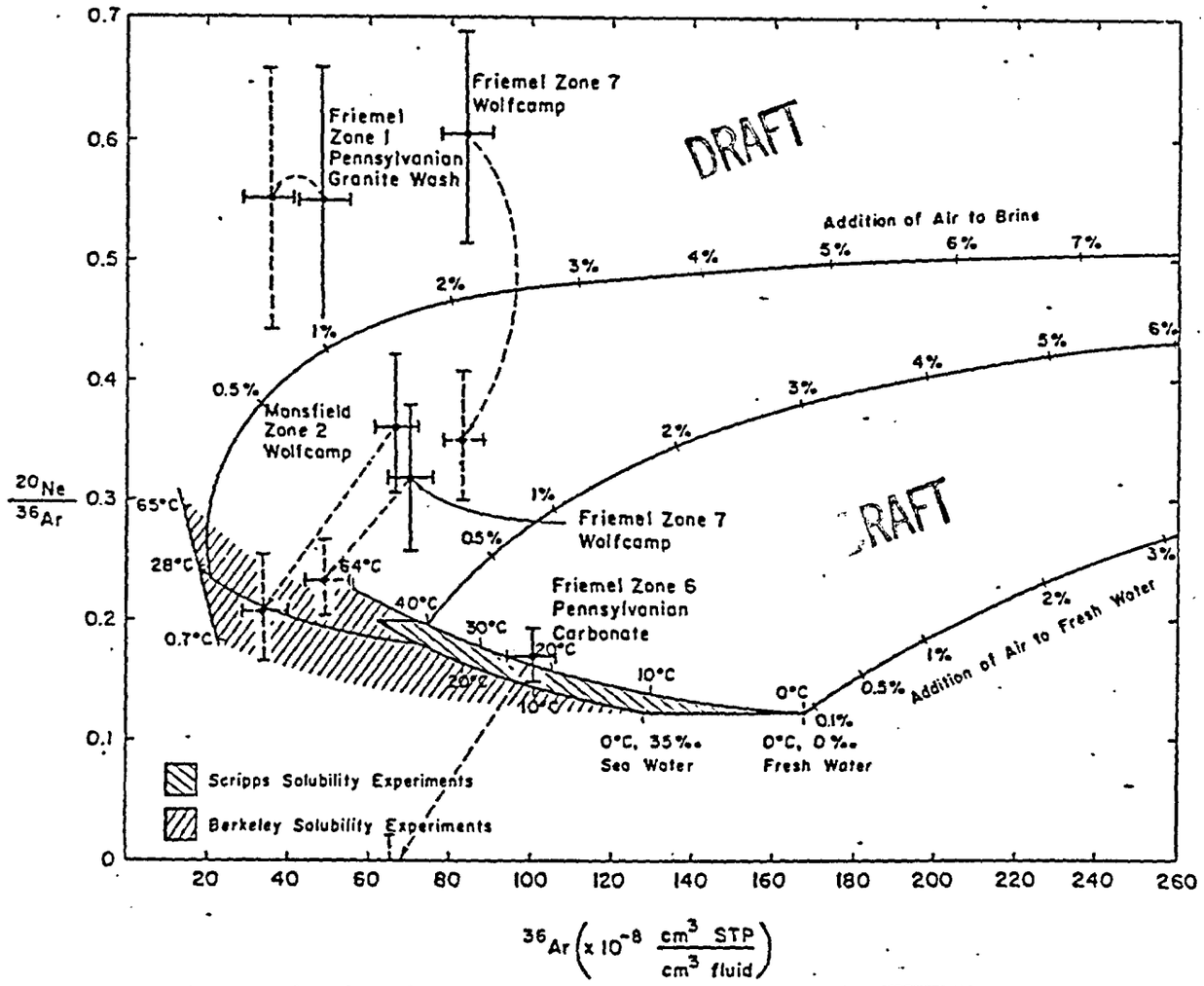

Figure 5-3. Various corrections of the isotope systematics for ^{36}Ar and $^{20}Ne/^{36}Ar$ for brines from the J. Friemel #1 and Mansfield #1 wells.

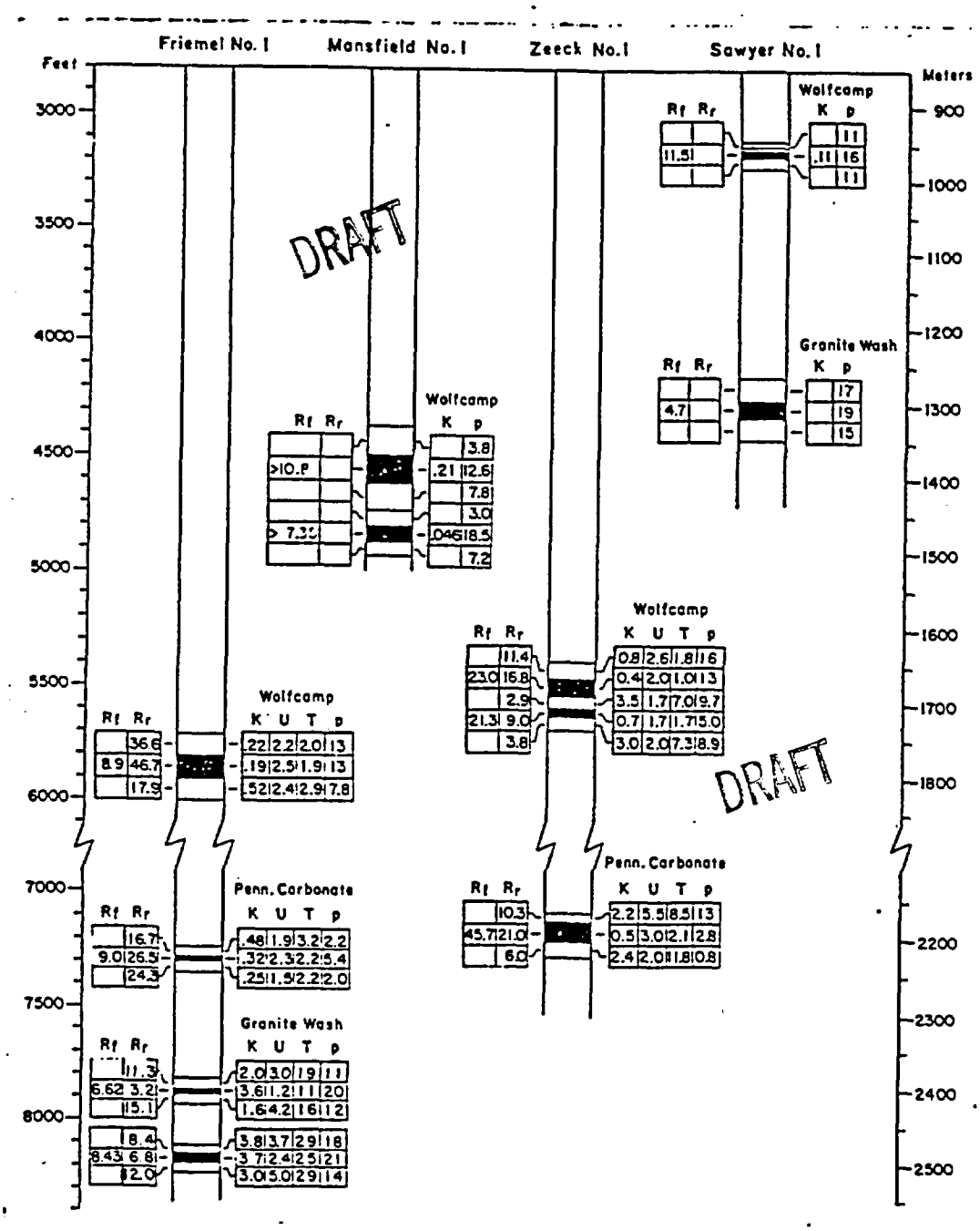

Figure 5-4. Porosity, K, U, and Th concentrations from down-hole wire-line gamma-ray geophysical logs of the well and porous zones (perforated zones) from which brine samples were collected. The perforated zones are indicated by the black bands (see Livingston et al., 1984, for the detailed results). The R_f values measured in the brine samples are shown for comparison with the R_r values, which were obtained from the (U+Th)/K data. The vertical axes show the depth of the porous zones and the relative (and absolute) thickness of the porous zones and adjacent strata.

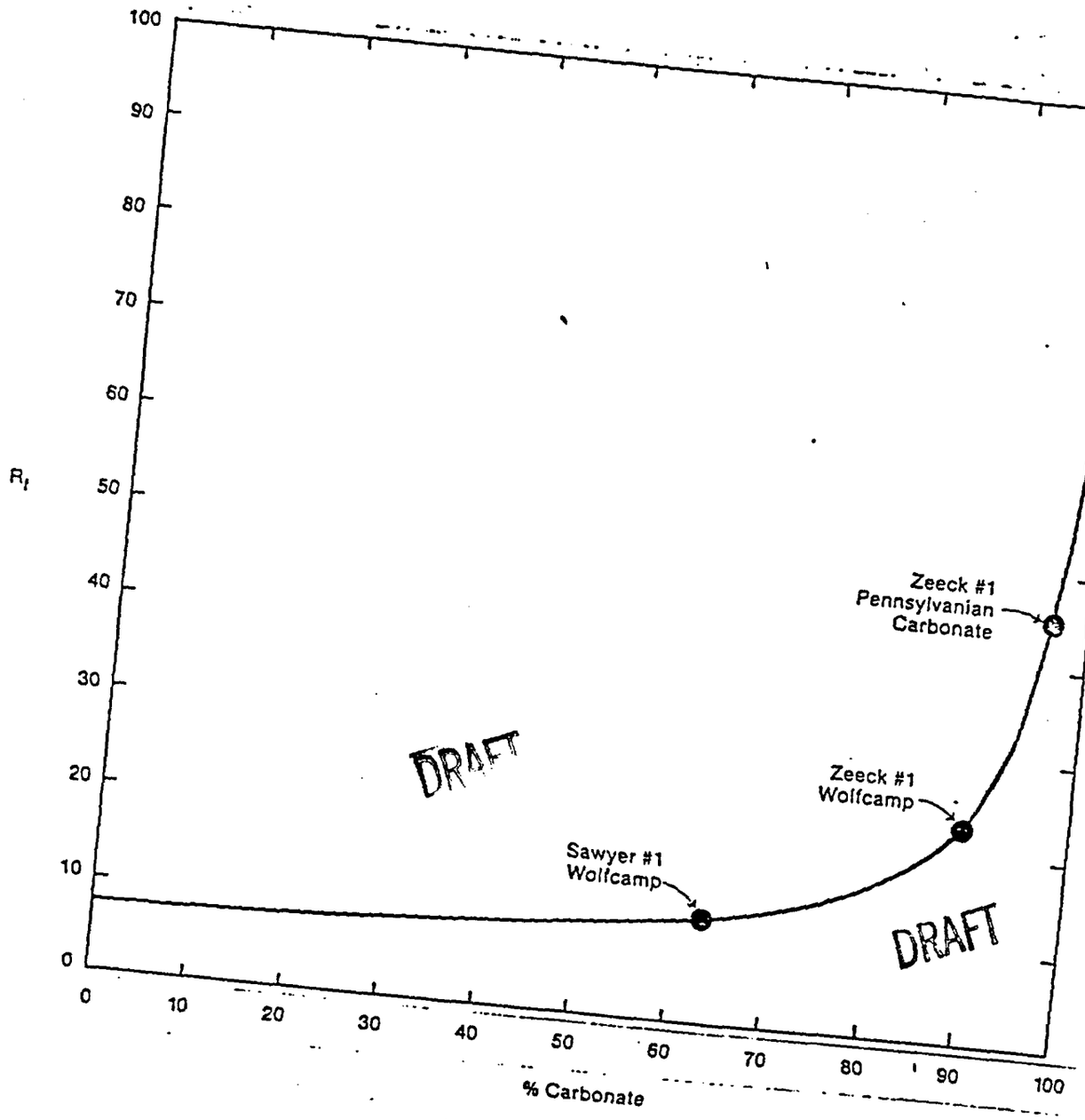

Figure 5-6. Comparison of observational data with binary model relationships for $^{4}He/^{40}Ar^{*}$ ratios in ground waters.

Table 5-1. Parameters Used for Binary Models of Brines From the Palo Duro Basin, Texas

Lithology	R	Th/U	U/K
Carbonate	90	1.0	24.2×10^{-4}
Arkose	7.5	4.0	1.27×10^{-4}

DRAFT

Table 5-2. Results of Residence Time Calculations for Palo Duro Basin Brines in Millions of Years

Formation/ Well Sampled/ Zone Number	Quasi-Static Model: One Fluid One Lithology (carbonate)	Inherited ^4He Models: Simple ^4He Subtraction Using $^{40}Ar^*$	Inherited ^4He Models: Binary Resolution of Arkose and Carbonate Brine
Pennsylvanian Carbonate. Zeeck #1 Zone #1	230	207	222
Wolfcamp Zeeck #1 Zone #3	347	302	308
Wolfcamp Sawyer #1 Zone #5	216	109	136

DRAFT