NUREG/CR-5379
PNL-6560
Vol. 1

Nuclear Plant Service Water System Aging Degradation Assessment

Phase I

Prepared by D. B. Jarrell, A. B. Johnson, Jr., P. W. Zimmerman, M. L. Gore

Pacific Northwest Laboratory
Operated by
Battelle Memorial Institute

Prepared for
U.S. Nuclear Regulatory
Commission

AVAILABILITY NOTICE

Availability of Reference Materials Cited in NRC Publications

Most documents cited in NRC publications will be available from one of the following sources:

1. The NRC Public Document Room, 2120 L Street, NW, Lower Level, Washington, DC 20555

2. The Superintendent of Documents, U.S. Government Printing Office, P.O. Box 37082, Washington, DC 20013-7082

3. The National Technical Information Service, Springfield, VA 22161

Although the listing that follows represents the majority of documents cited in NRC publications, it is not intended to be exhaustive.

Referenced documents available for inspection and copying for a fee from the NRC Public Document Room include NRC correspondence and internal NRC memoranda; NRC Office of Inspection and Enforcement bulletins, circulars, information notices, inspection and investigation notices; Licensee Event Reports; vendor reports and correspondence; Commission papers; and applicant and licensee documents and correspondence.

The following documents in the NUREG series are available for purchase from the GPO Sales Program: formal NRC staff and contractor reports, NRC-sponsored conference proceedings, and NRC booklets and brochures. Also available are Regulatory Guides, NRC regulations in the *Code of Federal Regulations*, and *Nuclear Regulatory Commission Issuances*.

Documents available from the National Technical Information Service include NUREG series reports and technical reports prepared by other federal agencies and reports prepared by the Atomic Energy Commission, forerunner agency to the Nuclear Regulatory Commission.

Documents available from public and special technical libraries include all open literature items, such as books, journal and periodical articles, and transactions. *Federal Register* notices, federal and state legislation, and congressional reports can usually be obtained from these libraries.

Documents such as theses, dissertations, foreign reports and translations, and non-NRC conference proceedings are available for purchase from the organization sponsoring the publication cited.

Single copies of NRC draft reports are available free, to the extent of supply, upon written request to the Office of Information Resources Management, Distribution Section, U.S. Nuclear Regulatory Commission, Washington, DC 20555.

Copies of industry codes and standards used in a substantive manner in the NRC regulatory process are maintained at the NRC Library, 7920 Norfolk Avenue, Bethesda, Maryland, and are available there for reference use by the public. Codes and standards are usually copyrighted and may be purchased from the originating organization or, if they are American National Standards, from the American National Standards Institute, 1430 Broadway, New York, NY 10018.

DISCLAIMER NOTICE

This report was prepared as an account of work sponsored by an agency of the United States Government. Neither the United States Government nor any agency thereof, or any of their employees, makes any warranty, expressed or implied, or assumes any legal liability of responsibility for any third party's use, or the results of such use, of any information, apparatus, product or process disclosed in this report, or represents that its use by such third party would not infringe privately owned rights.

see p. B.2

NUREG/CR-5379
PNL-6560
Vol. 1
RM, R9

Nuclear Plant Service Water System Aging Degradation Assessment

Phase I

Manuscript Completed: May 1989
Date Published: June 1989

Prepared by
D. B. Jarrell, A. B. Johnson, Jr., P. W. Zimmerman, M. L. Gore

Pacific Northwest Laboratory
Richland, WA 99352

Prepared for
Division of Engineering
Office of Nuclear Regulatory Research
U.S. Nuclear Regulatory Commission
Washington, DC 20555
NRC FIN B2911

ABSTRACT

The initial phase of an aging assessment of nuclear power plant service water systems (SWSs) was performed by the Pacific Northwest Laboratory to support the Nuclear Regulatory Commission Nuclear Plant Aging Research (NPAR) program. The SWS was selected for study because of its essential role in the mitigation of and recovery from accident scenarios involving the potential for core-melt. The objectives of the SWS task under the NPAR program are to identify and characterize the principal aging degradation mechanisms relevant to this system and assess their impact on operational readiness, and to provide a methodology for the mitigation of aging on the service water aspect of nuclear plant safety. The first two of these objectives have been met and are covered in this Phase I report.

A review of available literature and data-base information indicated that motor operated valve torque switches (an electro-mechanical device) were the prime suspect in component service water system failures. More extensive and detailed data obtained from cooperating utility maintenance records and personnel accounts contradicted this conclusion indicating that biologic and inorganic accumulation and corrosive attack of service water on component surfaces were, in fact, the primary degradation mechanisms.

A review of the development of time dependent risk assessment (aging) models shows that, as yet, this methodology has not been developed to a degree where implementation is reliable. Improvements in the accuracy of failure data documentation and time dependent risk analysis methodology should yield significant gains in relating aging phenomena to probabilistic risk assessment.

ACKNOWLEDGMENT

The authors wish to thank the cooperating utility that shared its experience and insight on service water system operation and maintenance with the investigating team. We would like to express our appreciation to the Electric Power Research Institution Service Water Working Group for their review and comments on this report. The authors would also like to acknowledge the editorial assistance of John W. Nageley.

SUMMARY

The service water system (SWS) represents the final heat transfer loop between decay heat generated in the nuclear core and the safe dispersal of that heat energy into the environment. It is the objective of this assessment performed by the Pacific Northwest Laboratory to demonstrate that aging phenomena in SWSs can be identified and quantified such that aging degradation of system components can be detected and mitigated before the reduction of system availability to below an acceptable threshold.

The following are the SWS task goals which were directly derived from the Nuclear Plant Aging Research (NPAR) Program plan:

1. Identify the principal aging-degradation mechanisms, then focus on in-depth study to identify and characterize the phenomena involved.

2. Examine the current surveillance specifications and make recommendations on their accuracy to provide accurate reliability information.

3. Provide a means to evaluate the effectiveness of maintenance on mitigating aging degradation phenomena.

4. Produce an inspection plan which optimizes the effectiveness of inspections based on system risk reduction.

5. Utilize the information generated by this task to resolve related generic issues and provide guidance for aging and life extension regulatory criteria.

The following was the approach used during Phase I:

- Perform a literature search of government and private sector reports which related to service water, aging-related degradation, and potential methodologies for analysis.
- Assemble a data-base that contains a listing of all commercial power plants in the U.S.--their SWS configurations, characteristics, and water source.

- Obtain and examine the available service water data from large generic data-bases, i.e., NPRDS, LER, NPE, inspection reports, and other relevant plant reference data. Analyze the SWS of a specific power plant for aging-related degradation phenomena based on the available data obtained from this data-base.

- Perform a fault tree analysis of a typical plant SWS to examine failure propagation and understand specific input requirements of probabilistic risk analyses.

- Develop an in-depth questionnaire protocol for examining the information resources at a plant which are not available in the standard data-bases. Subsequently, visit a central station power plant and solicit the required information.

- Analyze the information obtained from the in-depth plant interrogation and draw contrasts and conclusions with the data-base.

- Utilize the plant information to perform an interim assessment of SWS degradation mechanisms and focus future investigations.

The following is a summary of Phase-I conclusions relative to the stated goals:

1. Aging-related degradation of nuclear plant open (direct system interface to raw water without chemical control) SWSs is prevalent and constitutes a valid safety concern. Based on actual specific plant data, the primary degradation mechanism found in open SWSs is corrosion, compounded by biologic and inorganic accumulation. This conclusions directly contradicts the results of a failure analysis based on information obtained from the Nuclear Plant Reliability Data System (NPRDS) data-base.

2. Based on multiple plant samplings, the current level of surveillance and post-maintenance testing performed on the SWS is not sufficient to accurately trend or detect system degradation due to aging phenomena.

3. While post-maintenance surveillance does give some measure of the effectiveness of system modification/repair efforts, sufficient operational condition monitoring, and design basis post-maintenance testing, information is not available to characterize SWS maintenance effectiveness.

4. To improve the accuracy of current data to a point which would allow a high degree of confidence in aging degradation analysis, a root cause logic scheme needs to be developed that can be used to define the depth of knowledge and documentation required to accurately characterize an aging-related component failure event.

5. Clear resolution of the relevant SWS aging-related safety issues will require the specification of additional failure data documentation and regulatory requirements to ensure adequate system safety margin under aged or extended-life conditions.

CONTENTS

ABSTRACT iii

ACKNOWLEDGMENT v

SUMMARY vii

1.0 INTRODUCTION 1.1

1.1 NPAR PROGRAM GOALS 1.1

1.2 REGULATORY PERSPECTIVE 1.2

2.0 SYSTEM DEFINITION AND DESCRIPTION 2.1

2.1 OPEN SYSTEMS 2.3

2.2 OPEN RECIRCULATING SYSTEMS 2.3

2.3 CLOSED SYSTEMS 2.5

2.4 COMPONENT DESCRIPTION 2.5

3.0 PLANT OPERATIONS EXPERIENCE 3.1

3.1 THE IMPORTANCE OF INFORMATION ACCURACY 3.1

3.2 GENERIC DATA BASES 3.1

3.2.1 Generic Data Bases 3.2

3.2.2 IEEE Standard 500 . . . . . 3.4

3.3 COMPONENT HISTORY DATA 3.3

3.4 OTHER SOURCES OF INFORMATION 3.4

4.0 INTERIM AGING DEGRADATION ASSESSMENT 4.1

4.1 USES OF PLANT INFORMATION 4.1

4.1.1 In-Plant Component Failure Follow 4.1

4.1.2 SWS Plant Aging Analysis 4.1

4.1.3 Probabilistic Risk Assessments 4.2

4.2 EVALUATION OF PLANT DATA 4.5

4.2.1 Failure Classification 4.5

4.2.2 Aging Assessment Based on Plant Data 4.9

4.2.3 PRA Input Illustration 4.10

5.0 CONCLUSIONS AND RECOMMENDATIONS 5.1

5.1 CHANGES RECOMMENDED FOR COMPUTATION OF PRA INPUTS 5.1

5.2 RECOMMENDED PLANT RECORD CHANGES FOR AGING ASSESSMENT . . 5.2

5.3 CONCLUSIONS FROM PLANT DATA 5.2

REFERENCES R.1

APPENDIX A - ROOT CAUSE SCHEME A.1

APPENDIX B - SERVICE WATER SYSTEM MATERIALS AND ASSOCIATED CORROSION MECHANISMS B.1

FIGURES

1.1 NPAR Program Strategy 1.3

2.1 Functional Services Water System Boundary Definition 2.2

2.2 Open Service Water System 2.4

2.3 Closed Service Water System 2.6

2.4 Service-Water Intake Structure 2.10

4.1 A Time-Line Illustration of a Single Failure 4.4

4.2 Sedimentary Corrosion on 18-in. Gate Valve 4.12

4.3 Through Wall Pitting in 3-in. Pipe 4.13

A.1 Basic Failure Analysis Scheme A.5

TABLES

2.1 Listing of All Active U.S. Nuclear Commercial Reactors, Their Electrical Power Rating, Source of Water Used for a Heat Sink, and Specific SWS Configuration 2.7

3.1 Information Contained in Generic Data Base and Plant Maintenance Records, by Event 3.4

4.1 Current Status of Component Failure Analysis Knowledge Requirements 4.4

4.2 Summary of Plant Maintenance Data from an Aging Perspective 4.6

4.3 Twenty-One Month Summary of Maintenance Records 4.8

4.4 Logic Tree Results of First Analysis 4.11

4.5 Logic Tree Results of Second Analysis 4.11

4.6 Failure Mechanisms Identified in Second Analysis of Plant Data 4.14

4.7 Failures per Item per Million Hours 4.15

5.1 Summary of Suggested Changes in Plant Recordkeeping System 5.3

B.1 Observed Damage Mechanisms B.2

B.2 Potential Corrosion Factors B.3

1.0 INTRODUCTION

The Nuclear Regulatory Commission (NRC), Office of Nuclear Regulatory Research (RES), Division of Engineering (DE), is implementing the Nuclear Plant Aging Research (NPAR) Program plan (1) to resolve technical safety issues related to the aging of commercial nuclear power plants. Aging in the context of the NPAR plan is defined as follows:

> **The cumulative changes with the passage of time that may occur within a component or structure due to one or more of the following factors:**
>
> - **natural processes during operation**
> - **external stressors caused by storage or operation**
> - **service wear caused by operational cycling**
> - **excessive testing**
> - **improper installation, application, operation or maintenance.**

The specific topic of investigation in this task, performed by the Pacific Northwest Laboratory,[a] is the safety-related portions of the nuclear plant service water system (SWS). During a loss of coolant accident (LOCA), or similar core threatening postulated accident scenario, this system is relied on to transfer heat from vital plant equipment, such as the residual heat removal (RHR) heat exchangers and the emergency diesel generators (EDGs), to the ultimate heat sink.

Emphasis in this investigation has been placed on identification and characterization of the mechanisms of material and component degradation during service and the evaluation of methods of inspection, surveillance, condition monitoring, and maintenance as a means of mitigating these effects.

1.1 NPAR PROGRAM GOALS

The specific goals of the NPAR program are

1. to identify and characterize the primary aging mechanism(s) which could cause safety-related component degradation

2. to identify methods of inspection, surveillance, and monitoring which will ensure timely detection of significant aging effects before loss of safety function

3. to evaluate the effectiveness of storage, maintenance and replacement practices in mitigating the rate and extent of aging degradation.

(a) Operated for the U.S. Department of Energy by Battelle Memorial Institute.

The SWS Aging Assessment utilizes the NPAR phased approach to system research shown in Figure 1.1. The shading in this diagram suggests the degree to which the task initiative have been investigated. This report describes the results of Phase I for the SWS task and includes information on

- available subject literature
- available generic data-bases
- utility machinery history
- utility system expert inputs
- commercial expertise.

This information is analyzed and evaluated to identify the principal SWS aging mechanisms that will direct the focus of the remainder of the task goals.

1.2 REGULATORY PERSPECTIVE

The impetus for this study originates from the significant number of documented SWS degradation-related events that have seriously impaired the ability of this system to carry out its intended safety functions (2,3,4). As previously stated, the safety function is vital to the successful termination of many potential core-melt scenarios. The cited references illustrate the potential for a partial or complete loss of SWS operability from a common failure mode. Additionally, fouling by either mud, silt, corrosion products, or aquatic bivalves has led to plant shutdowns and reduced power operation for repairs of modification as well as degraded modes of operation (5,6). Service water system regulatory concerns are prioritized in reference (7) in the form of Generic Safety Issues. Suggested solutions to service-water-related Generic Safety Issues, and the regulatory format for their implementation, are the final phase objective of this study.

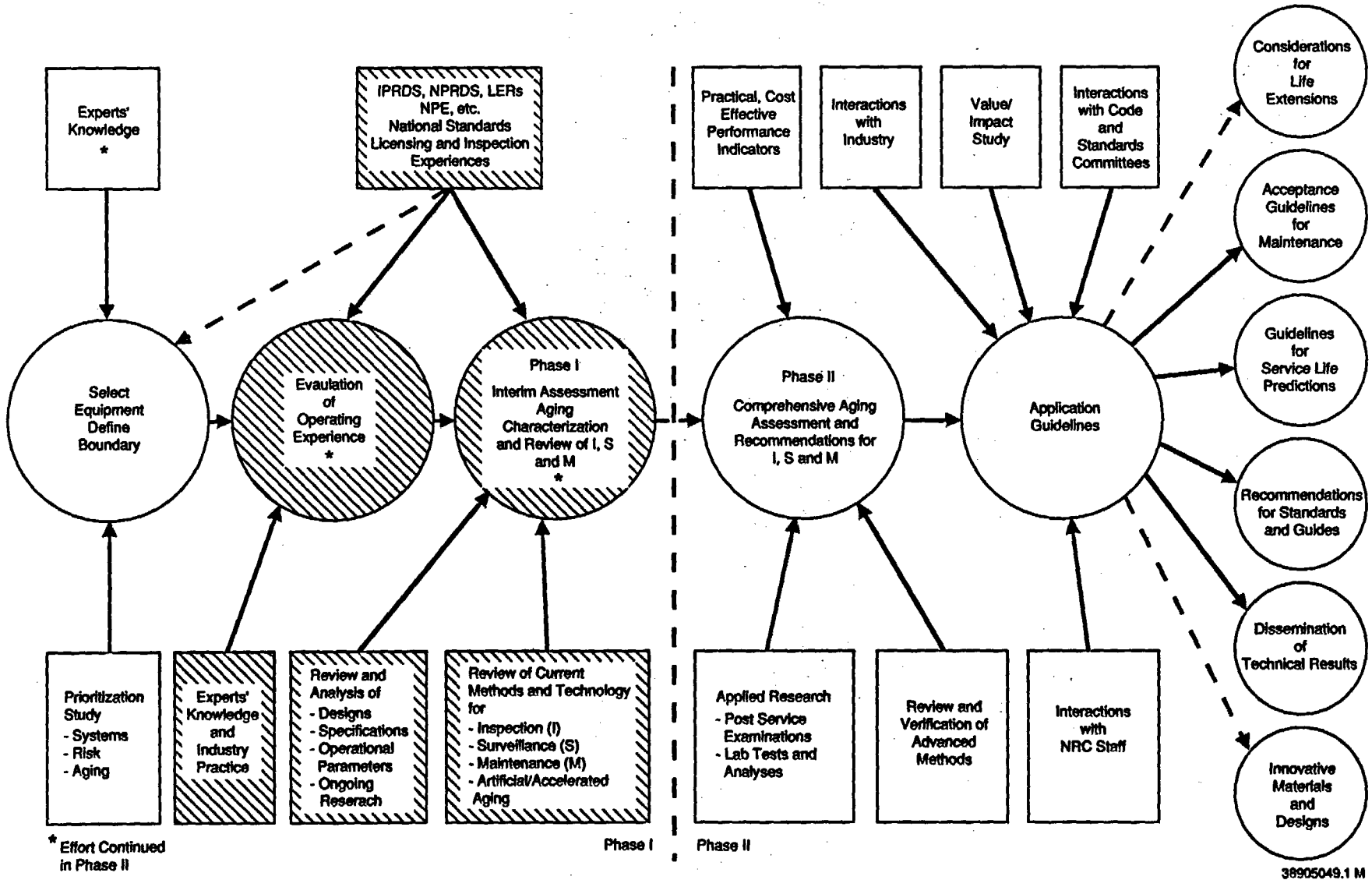

FIGURE 1.1. NPAR Program Strategy

2.0 SYSTEM DEFINITION AND DESCRIPTION

The function of the service water system is to transfer the heat loads from various sources in the plant to the ultimate heat sink. The three safety-related heat sources served by this system are identified as

- core decay heat
- decay heat removal components
- emergency power sources.

Because of the wide variation in the nature of each plant's ultimate heat sink and the application of a multiplicity of system design approaches, the system is defined from a functional standpoint as follows: all components, their associated instrumentation, controls, electrical power, cooling and seal water, and lubrication, and other auxiliary equipment which comprises the final heat transfer loop between the heat sources and the ultimate heat sink.

A overall perspective of this functional definition is given by examining the elementary diagram of a SWS shown in Figure 2.1. The dashed boundary shows the range of components considered by this study:

- intake structure including canals or other diversion structures from the ultimate heat sink to the pump debris removal mechanism

- the pump galley and structures with all associated water-level control devices (weirs, gates, valving, etc.) and instrumentation

- the service-water pump, shafting and motive source including controls, cabling and electrical distribution system

- the piping distribution network, from the pumps to the heat exchangers, including all valving, manifolds, instrumentation, and logic networks
- the service (secondary or cooling) water side of a actual heat exchange devices (primary or cooled fluid-side aging is treated by other NPAR system studies)

- all discharge piping, valves, and manifolds from the heat exchangers to the outlet or discharge structure

- the discharge structure, gates and associated effluent channeling devices.

Only those components which are designated important to reactor safety (nuclear safety class 3, see ref 8) and designated Seismic Category I are examined in this investigation. Seismic Category I requires that plant structures, systems, and components be designed to withstand a design basis earthquake.

Safety-related service-water cooling loops in commercial nuclear reactors are also designed to meet the single failure criterion. That is,

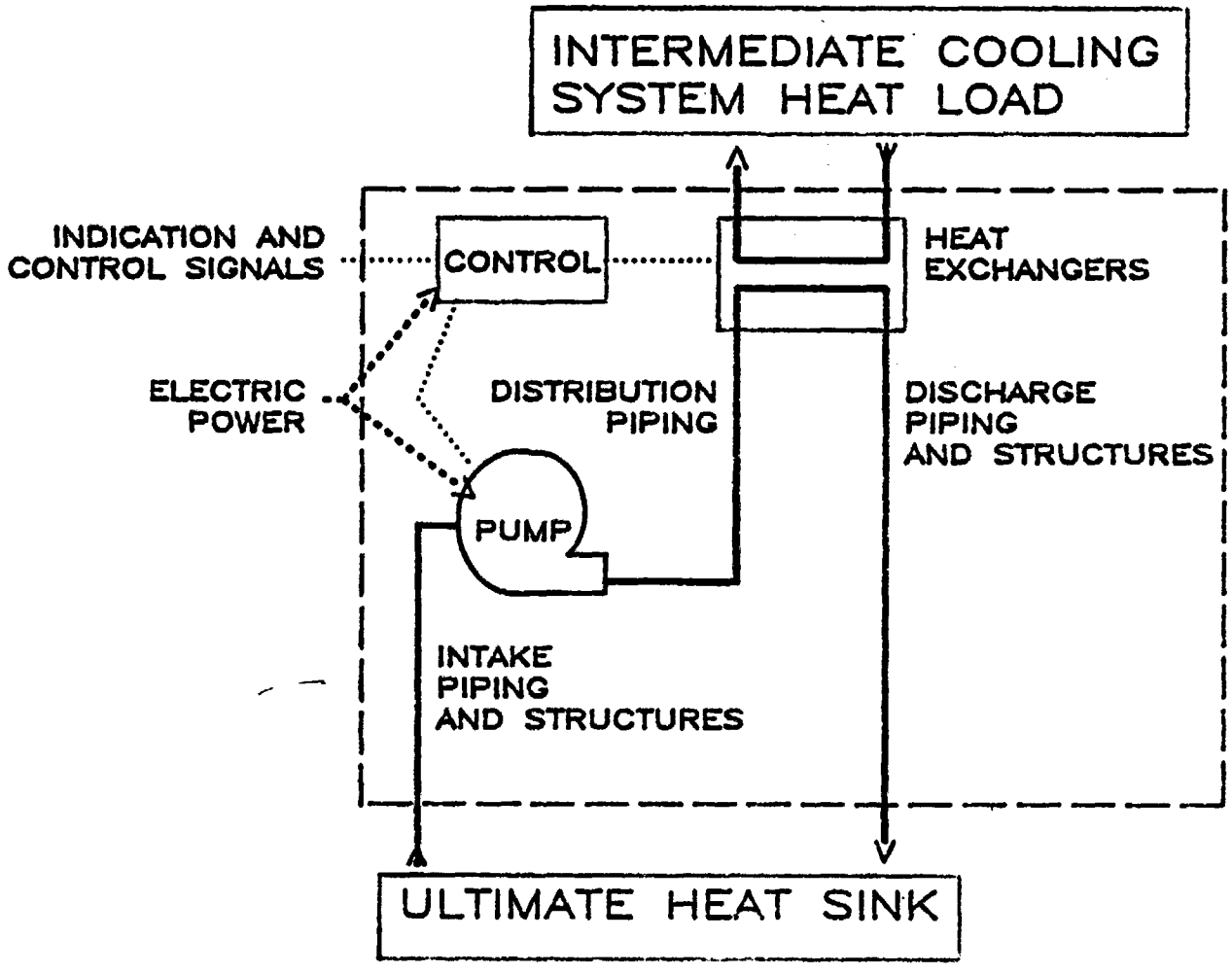

FIGURE 2.1. Functional Services Water System Boundary Definition

redundant components are provided such that the failure of any single active component in an SWS will not prohibit the adequate removal of heat from any of the safety-related loads.

A somewhat more detailed discussion of practical SWS layouts follows, illustrating three basic configurations, usually selected based on the nature of the available ultimate heat sink. These descriptions are given to provide a broad knowledge of the design and function of SWS components and do not represent any specific BWR or PWR design.

2.1 OPEN SYSTEMS

A diagram of a typical open SWS is shown in Figure 2.2. This type of arrangement is often referred to as a "straight through" system and is generally characterized by the availability of a large volume of water as the ultimate heat sink. The obvious advantage of this configuration is its relative simplicity and resultant lower initial cost to the utility. The absence of a large capacity intermediate heat exchanger and a requirement for a secondary set of component cooling water pumps, as found in the closed cycle configuration, make this layout attractive for both its economy of installation and theoretical component maintenance cost. The major offset here is the potential for problems associated with the exposure of a large number of components to a potentially aggressive raw water environment.

Many of the component cooling subsystems are throttled to maintain required component temperature limits, resulting in low-flow velocities or, in many cases, in intermittently used components, resulting in completely stagnant loops. This allows solids deposition and various forms of corrosion to accelerate in these areas (these considerations are addressed in Appendix B).

2.2 OPEN RECIRCULATING SYSTEMS

A variation of the open system is the recirculating type which maintains a self-contained ultimate heat sink. This is frequently achieved through the use of a spray cooling pond or a dedicated cooling tower. The advantage of this arrangement is two-fold: 1) through settling the make-up water filtration, the water purity (turbidity) is vastly improved leading to significantly reduced siltation in low-low velocity areas, and 2) chemical control of the circulated water is achievable allowing a reduction in corrosion and biofouling without the limitations imposed by environmental discharge restrictions.

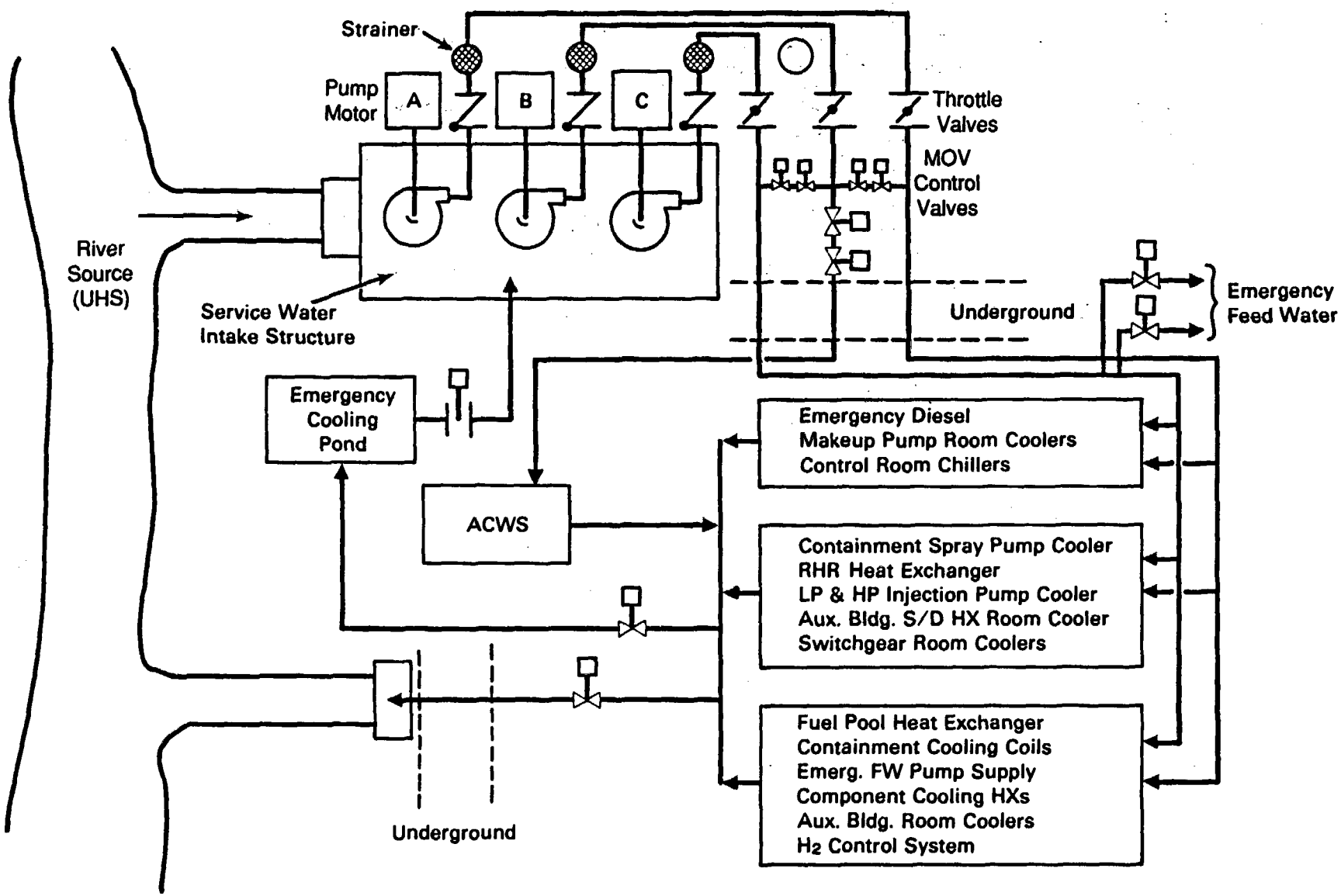

FIGURE 2.2. Open Service Water System

2.3 CLOSED SYSTEMS

The basic difference between an open and a closed system is that, in a closed system, plant personnel can control the coolant chemistry which comes with contact with the system load heat exchangers, whereas in an open system they cannot. This type of system is frequently used when adverse environmental conditions (saline or other corrosive) are prevalent.

The closed system (shown in Figure 2.3) is obviously more expensive initially and contains a larger number of components, but it is not as susceptible to premature aging through extensive corrosion attack within the secondary loop.

A compilation of all active commercial reactors, their electrical power rating, source of water used for an ultimate heat sink, and specific SWS configuration is given in Table 2.1. This listing is primarily sorted by SWS cycle type, with plant names listed in alphabetical order for each of the types. Again, the distinction between open and closed systems is the practicality of maintaining control of cooling water chemistry, thus an CLOSED POND system could be controlled via additive chemicals, whereas a OPEN POND is considered to be too large for effective control. The information listed was extracted from Final Safety Analysis Reports (FSARs) and may be updated by plant modifications.

2.4 COMPONENT DESCRIPTION

While arrangements and materials utilized in construction differ widely among plants, the design of each functional area of all SWSs is basically the same. The following discussion is generic and does not represent any specific plant.

The intake structure serves to admit water to the SWS, provides for the necessary degree of debris removal, and houses the service-water pumps and their associated switchgear. For the open system shown in Figure 2.2, this basically consists of identical bays which house bar gates, stop logs, traveling screens, screen wash pumps, chlorine injection equipment, and the circulating and service-water pumps. An elevation drawing showing a typical arrangement of these components is shown in Figure 2.4. A separate ventilation system for the service-water pump area is designated class I to ensure that the equipment remains operable during a design basis accident and is capable of functioning after a design basis earthquake. The service-water pumps and their associated bays are also designated class I seismic equipment.

The parallel traveling screens function to remove small debris that penetrate the larger (~3 in. opening) the bar gate strainers. The screens are cleaned by an automatic high-pressure spray system which senses differential pressure across the screens.

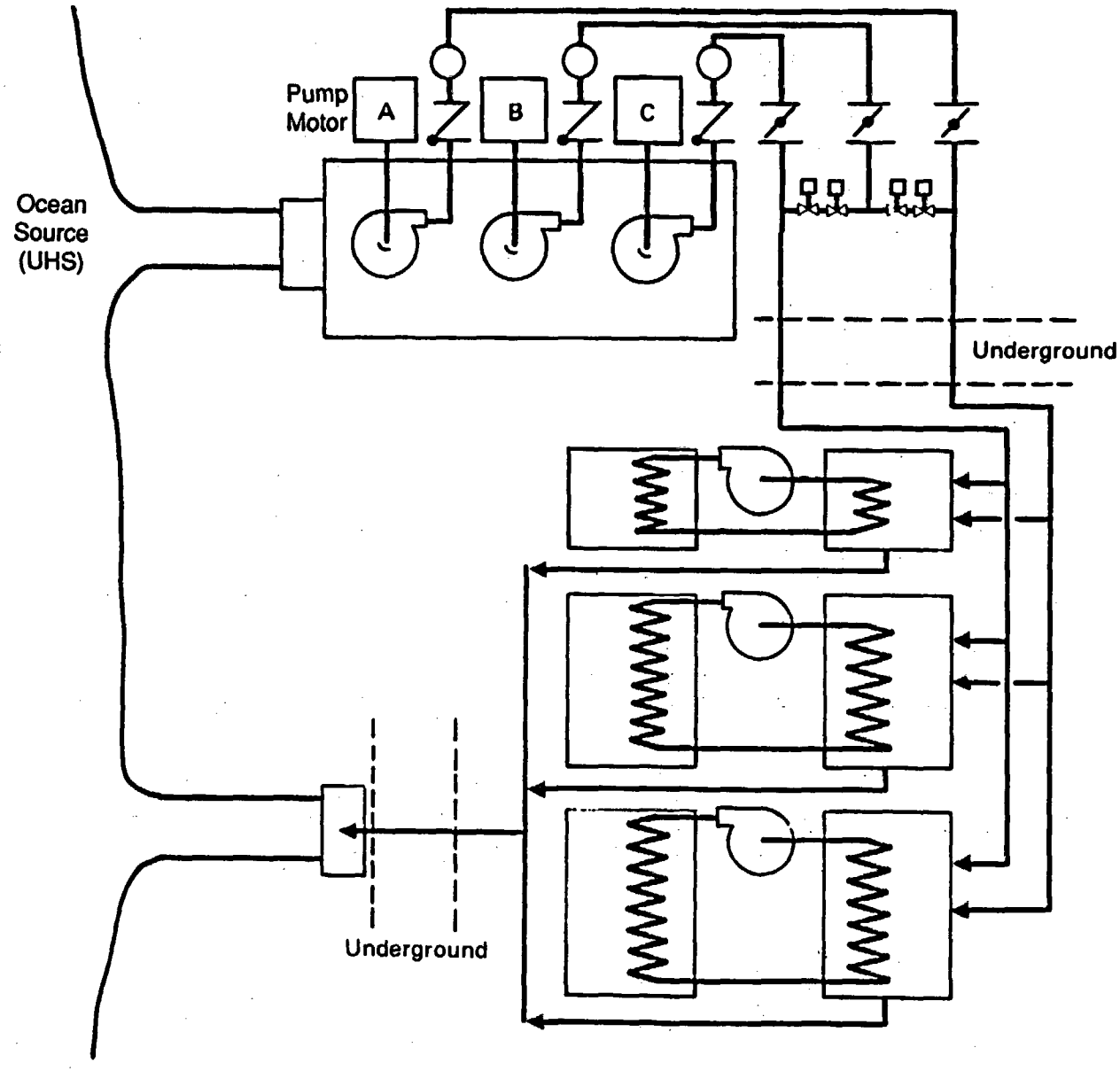

FIGURE 2.3. Closed Service Water System

TABLE 2.1. Listing of All Active U.S. Nuclear Commercial Reactors, Their Electrical Power Rating, Source of Water Used for a Heat Sink, and Specific SWS Configuration

Plant Name	Reactor/ Rating	Parent Utility	Ultimate Heat Sink	Service Water Cycle
Clvrt Clfs-1,2	(CE-845)	Baltimore Gas & Elec	Chesapeake Bay	Closed
Cook-1	(W-1030)	Indiana & Mich Elec	Lake Michigan	Closed
Cook-2	(W-1090)	Indiana & Mich Elec	Lake Michigan	Closed
Fermi-2	(GE-1093)	Detroit Edison Co	Hyperbol/Erie	Closed
Fort St Vran-1	(DA-330)	Colorado Public Serv	FD TWR/(Mech)	Closed
Hope Creek	(GE-1067)	Public Service Elect	Hyperbol/Delawar	Closed
Limerick-1,2	(GE-1055)	Philadelphia Elec Co	Hyperbol/Schukil	Closed
Maine Yankee	(CE-790)	Maine Yankee Atomic	Back R/(Atl O)	Closed
Pilgrim-1	(GE-655)	Boston Edison Co	Cape Cod Bay	Closed
Rancho Seco-1	(B&W-916)	Sacramento Muni Util	Hyperbol/Canal	Closed
River Bend-1	(GE-940)	Gulf States Util	FD TWR/Miss R	Closed
Salem-1	(W-1090)	Public Serv Elec NJ	Delaware River	Closed
Salem-2	(W-1115)	Public Serv Elec NJ	Delaware River	Closed
San Onofre-1	(W-436)	Southern CA Edison	Pacific Ocean	Closed
San Onofre-2	(CE-1070)	Southern CA Edison	Pacific Ocean	Closed
San Onofre-3	(CE-1080)	Southern CA Edison	Pacific Ocean	Closed
Shoreham	(GE-819)	Long Island Lighting	L I Sound	Closed
St Lucie-1,2	(CE-810)	Florida Pwr & Light	Atlantic Ocean	Closed
Waterford-3	(CE-1165)	Louisiana Pwr and Li	Mississippi River	Closed
Diablo Canyn-1	(W-1084)	Pacific Gas & Elec	Pacific Ocean	Closed
Diablo Canyn-2	(W-1106)	Pacific Gas & Elec	Pacific Ocean	Closed
Palo VR-1,2,3	(CE-1270)	Arizona Public Serv	Basin Filter-Well	Closed Pond
WNP-2	(GE-1100)	WA Pub Pwr Supply	FD TWR/Columbia	Closed Pond
Byron-1,2	(W-1120)	Commonwealth Edison	Hyperbol/Rock	Closed River
Vogtle-1(2)	(W-1125)	Georgia Power Co	FD TWR/Savna R	Closed Well
S TX Proj-1,2	(W-1250)	S TX Proj Nuc Gen	Reser/Colorado	Open/Closed
Big Rock Point	(GE-71)	Consumers Power Co	Lake Michigan	Open Lake
Catawba-1,2	(W-1145)	Duke Power Co	FD TWR/(Mech)	Open Lake
Clinton-1	(GE-955)	Illinois Power Co	Lake Clinton	Open Lake
Davis-Besse-1	(B&W-880)	Toledo Edison Co	Tower/L Erie	Open Lake
Dresden-2,3	(GE-794)	Commonwealth Edison	Cooling Lake	Open Lake
Fitzpatrick	(GE-821)	Pwr Auth State of NY	Lake Ontario	Open Lake
Ginna	(W-470)	Rochester Gas & Elec	Lake Ontario	Open Lake
Kewaunee	(W-535)	Wisconsin Pub Servic	Lake Michigan	Open Lake
Lasalle-1,2	(GE-1078)	Commonwealth Edison	Reservoir	Open Lake
McGuire-1,2	(W-1180)	Duke Power Co	Reservoir	Open Lake
Nine Mile-1	(GE-610)	Niagara Mohawk Power	Lake Ontario	Open Lake
Nine Mile-2	(GE-1080)	Niagara Mohawk Power	Hyperbol/Lake M/U	Open Lake
North Anna-1,2	(W-890)	Virginia Elec & Pwr	Reservoir (Anna)	Open Lake
Oconee-1,2,3	(G&W-860)	Duke Power Co	Reservoir	Open Lake
Palisades	(CE-798)	Consumers Power Co	FD TWR/Michigan	Open Lake
Perry-1,2	(GE-1205)	Cleveland Elec Illum	Hyperbol/L. Erie	Open Lake

TABLE 2.1. (contd)

Plant Name	Reactor/ Rating	Parent Utility	Ultimate Heat Sink	Service Water Cycle
Point Beach-1,2	(W-497)	Wisconsin Elec Pwr	Lake Michigan	Open Lake
Robinson-2	(W-665)	Carolina Power & Lig	Reser/Robinson	Open Lake
Summer	(W-900)	S Carolina Electric	Reser/Monticello	Open Lake
Wolf Creek	(W-1150)	Kansas Gas and Elec	Cooling Lake	Open Lake
Zion-1,2	(W-1040)	Commonwealth Edison	Lake Michigan	Open Lake
Brunswick-1,2	(GE-790)	Carolina Pwr & Light	Atl O Outfall	Open Ocean
Crystl River-3	(B&W-825)	Florida Power Corp	Gulf of Mexico	Open Ocean
Millstone-1	(GE-660)	Northeast Utilities	L I Sound	Open Ocean
Millstone-2	(CE-830)	Northeast Utilities	L I Sound	Open Ocean
Millstone-3	(W-1150)	Northeast Utilities	L I Sound	Open Ocean
Oyster Creek	(GE-620)	Jersey Central Pwr	Barnegat Bay	Open Ocean
Seabrook-1	(W-1150)	Public Serv Co of NH	Atlantic Ocean	Open Ocean
Turkey Pnt-3,4	(W-728)	Florida Pwr & Light	Canal/Byscane Bay	Open Ocean
Callaway-1	(GE-1140)	Union Electric Co	Hyperb/Missouri R	Open Pond
Sharon Harris-1	(W-900)	Carolina Power & Lig	Hyperbol/Reser	Open Pond
Yankee-Rowe	(W-175)	Yankee Atomic Electr	Deerfield River	Open Pond
ANO-1	(B&W-836)	Arkansas Pwr & Light	Reservoir, Ark R	Open River
ANO-2	(CE-858)	Arkansas Pwr & Light	Hyprbol/River M/U	Open River
Arnold	(GE-538)	Iowa Elec Light	FD TWR/(Mech)	Open River
Beaver Valy-1,2	(W-833)	Duquesne Light Co	Hyprbol/Ohio River	Open River
Belfont-1(2)	(B&W-1213)	Tennessee Valley Ath	Hyperbol/Tenn Riv	Open River
Braidwood-1,2	(W-1120)	Commonwealth Edison	Reser/Kankakee R	Open River
Brwns F-1,2,3	(GE-1065)	Tennessee Valley Ath	Combcycle/Tenn Rv	Open River
Coman Peak-1,2	(W-1111)	Texas Util Gen Co	Reser/River	Open River
Cooper	(GE-778)	Nebraska Public Pwr	Missouri River	Open River
Ct Yanke	(W-582)	Ct Yankee Atomic Pwr	Connecticut River	Open River
Farley-1,2	(W-860)	Alabama Power Co	FD TWR/(Mech)	Open River
Ft Calhoun-1	(CE-478)	Omaha Public Pwr Dis	Missouri River	Open River
Grnd Glf-1(2)	(GE-1250)	Mississippi Pwr & Li	Hyperbol/Miss R	Open River
Hatch-1,2	(GE-770)	Georgia Power Co	FD TWR/(Mech)	Open River
Indian Point-2	(W-873)	Con Ed Co of NY	Hudson River	Open River
Indian Point-3	(W-965)	Pwr Auth State of NY	Hudson River	Open River
La Crosse	(GE-48)	Dairyland Pwr Coop	Mississippi River	Open River
Monticello	(GE-536)	Northern States Pwr	FD TWR/Miss R	Open River
Peach Bot-2,3	(GE-1065)	Philadelphia Elec Co	FD TWR/Susq R	Open River
Prairie I.-1,2	(W-507)	Northern States Pwr	FD TWR/(Mech)	Open River
Quad City-1,2	(GE-789)	Commonwealth Edison	Spray Canal	Open River
Sequoyah-1,2	(W-1148)	Tennessee Valley Ath	Comb Cycle/Tenn	Open River
Surry-1,2	(W-775)	Virginia Elec & Pwr	James River	Open River
Susquehana-1,2	(GE-1050)	Pennsylvania Pwr & L	Hyperbol/Susquhan	Open River
TMI-1,2	(B&W-792)	Metropolitan Edison	Hyperbol/Susqu	Open River

TABLE 2.1. (contd)

Plant Name	Reactor/ Rating	Parent Utility	Ultimate Heat Sink	Service Water Cycle
Trojan	(W-1130)	Portland General Ele	Hyperbol/Columbia	Open River
Vermont Yankee	(GE-514)	Vt Yankee Nuc Pwr Co	FD TWR/Conn R	Open River
Watts Bar-1,2	(W-1170)	Tennessee Valley Ath	Hyperbol/Tenn Riv	Open River

Hyperbol = Hyperbolic Cooling Tower.
FD TWR = Forced Draft Cooling Tower.
R = River.
Reser = Reservoir
O = Ocean.

Three service-water pumps are typically utilized to provide the necessary head for flow requirements of the various heat exchangers in the system. Normal operation of the system is with two of the three SWS pumps in operation supplying all steady-state cooling requirements and the third pump in a standby condition (one out of two and three out of four is also common). Pump motor power ranges from approximately 200- to 600-hp and flow from 4,000 to 10,000 gal/min per pump depending on configuration and plant size. Pumps are powered from plant vital AC busses (with diesel backup) to ensure a continuous electrical supply. Pump motor winding temperature, current, discharge pressure, and bearing temperature instrumentation is generally available at local and remote readout panels.

Common practice is to pass the water through a discharge strainer following the pump to ensure that any remaining particles are small enough so they are not capable of plugging the smallest heat exchanger tube in the system. These strainers are monitored for excess differential pressure which could indicate a plugged condition. The swing check valves located just downstream of the strainers are designed to prevent reverse flow through the idle pump and strainer.

The crosstie valves located on the discharge header permit full operation of both service-water loops with any two SWS pumps running. These are motor operated valves powered from the plant vital bus. It is a common practice to provide for emergency makeup to the reactor vessel or steam generators from the SWS because it is engineered as a high-reliability water source. Redundant headers then provide the necessary flow distribution network to the individual cooling loads. The discharge header then collects the system flows and directs them back through the cooling water flume. Some arrangements allow makeup to the emergency cooling water reservoir from the discharge header as illustrated in Figure 2.4.

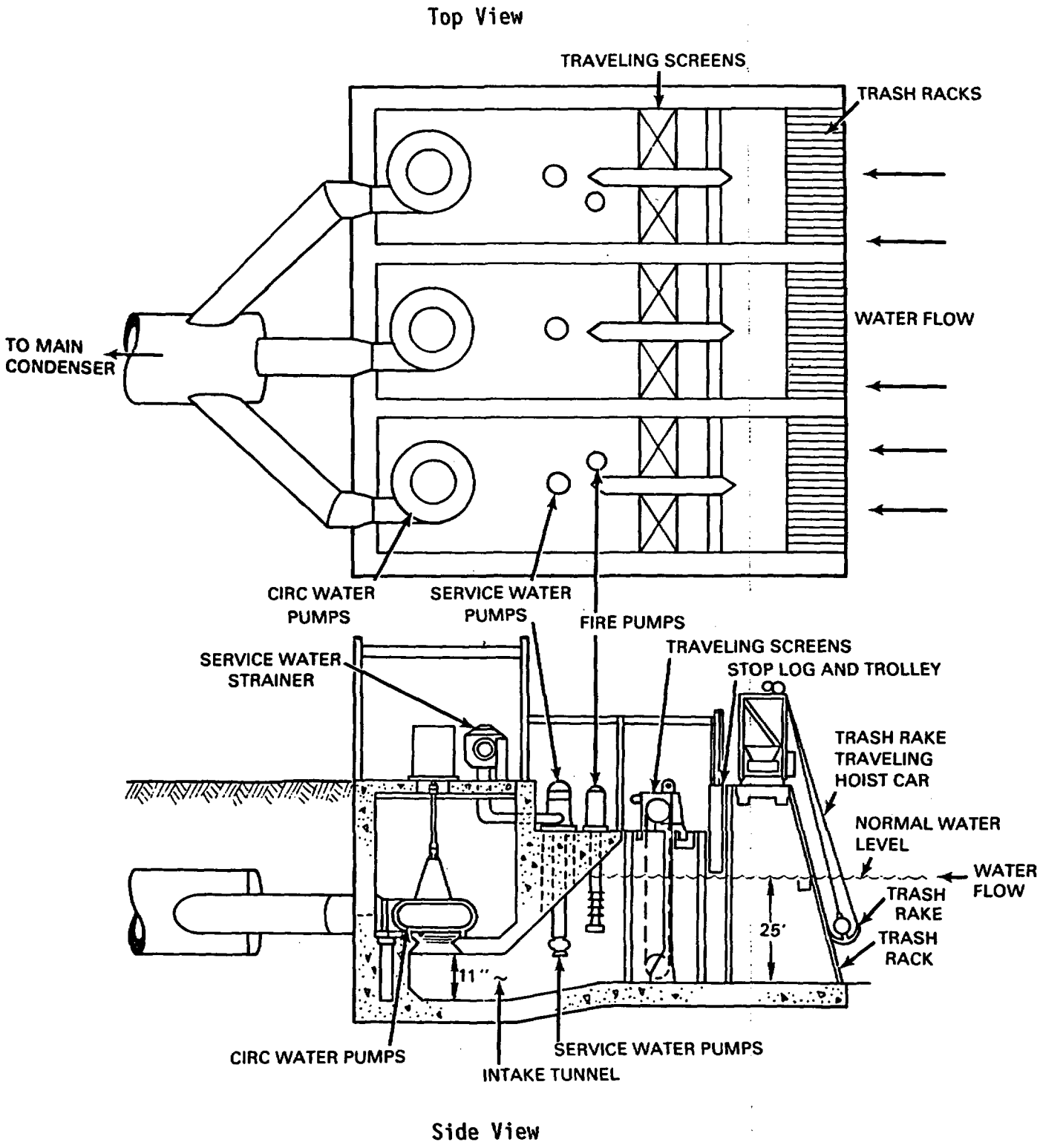

FIGURE 2.4. Service-Water Intake Structure

The emergency cooling water source (river, cooling pond, ocean, etc.) may take various forms depending on local conditions, but it must meet the requirements of Reg. Guide 1.27 (9) in capacity, availability, and accessibility under seismic conditions.

3.0 PLANT OPERATIONS EXPERIENCE

The first step in conducting phase one of the NPAR plan on SWSs was to investigate the extent and accuracy of the generic data bases already in existence for the topic at hand. The generic data analysis results did not appear reasonable in light of the investigators' previous plant experience. Subsequently, a broader search for information led the researcher to specific plant data bases and final to the system expert.

This section examines the importance of accuracy in aging data, the utility of the various data sources, the impact of detailed machinery history data, and other sources of relevant information and expertise.

3.1 THE IMPORTANCE OF INFORMATION ACCURACY

Considering the breadth of the potential aging stressors in SWSs, it is vital that the available research resources be focused somewhat narrowly on only those key areas where a high return can logically be expected. To accomplish this, researchers have examined the data available to provide some guidance as to what is and is not, of vital importance to a specific examination task. It is important for the investigator to understand the intended purpose, features, and limitations of the data base being considered.

Due to the operational background of the investigators in this task, a logical expectation based on experience in the plant as to the principal aging degradation mechanisms for the SWS served as a check on the initial data base conclusions. The resulting search for more accurate and definitive data resulted in a complete reorientation of the task focus.

It is extremely important that this and other NPAR investigations (10) avoid being mislead by incomplete or inaccurate data. Since the end product of the NPAR Program revolves around aging and license renewal regulatory issues, there appears to be a real need for technical specifications, surveillances, and other necessary licensee requirements aimed at resolving the primary aging issues.

3.2 GENERIC DATA BASES

Component unavailabilities computed from generic data bases may be used for input to a PRA configured for a specific plant. Resulting risk levels could then be examined to see how changes in certain component unavailability rates affect overall plant risk. This would identify key components that have the potential of significantly increasing plant risk, if their unavailabilities increase due to aging.

If the level of plant risk calculated using unavailability values from generic data bases is acceptable, and if it can be assumed that the actual component unavailabilities of a plant's components are at or below the corresponding unavailabilities computed from the generic data base, then the actual plant risk is acceptable.

This approach allows for the impact of high unavailability of a specific component to be assessed. If a specific component at the plant has an unusually high unavailability or failure rate, overall plant risk may be calculated using unavailabilities from the generic data bases and the one specific unavailability from the plant. It can then be determined whether this increased unavailability raises the plant's risk significantly.

Use of data from generic data bases in PRA calculations results in a high level of uncertainty in calculated plant risk. There are several reasons for this:

1. None of the data bases contain a comprehensive listing of all failures that have occurred.

2. Some are composed of random failure histories, while others only list failures which have violated certain specifications.

3. The failures which are listed often have incomplete information.

3.2.1 Generic Data Bases

Common generic data bases investigated during the SWS assessment include the following:

- NPE - Nuclear Plant Experiences (11) - A quarterly updated indexed system containing over 50,000 BWR and PWR events.

- LER - Licensee Event Report system (12) - Basically a compilation of nuclear plant Technical Specification violations; an NRC data system.

- NPRDS - Nuclear Plant Reliability Data System (13) - An industry-wide voluntary system for monitoring performance of selected systems and components, currently under the direction of INPO.

Comparisons of these data bases have been conducted elsewhere (14,15, 16). Several key conclusions can be made from these references:

1. LERs do not contain sufficient information to support aging data analysis.

2. While corrective maintenance records contain virtually all of the component failure occurrences, generic data bases contain only 10 to 30% of that information.

3. Little or no root cause documentation is found in generic data bases. This results in no clear definition of aging events.

3.2.2 IEEE Standard 500

Mechanical unavailabilities given in IEEE Standard 500 (17) may be used in the same way as unavailabilities computed from generic data bases. The unavailabilities in this standard are computed using the Delphi method, a technique for collecting and summarizing reliability information. The method uses information and data from classical statistical data bases whenever possible, and supplements this with estimates provided by plant experts. The experts are allowed to use any information they deem useful in arriving at their estimates. Data from different sources is weighted so that more detailed data are then sent back to the experts, giving the experts a chance to modify their original estimates, or reaffirm them. These results are again collected and synthesized. This process was used incorporating data summaries of Licensee Event Reports, NPRDS data, IPRDS data, input from over 200 experts, and several other sources of unavailability data.

Because approximately 80% of the data listed in the IEEE Standard 500 is taken from available data bases, including the generic data bases discussed previously component unavailabilities obtained from the IEEE Standard 500 have relatively high uncertainties. Combination of the different data bases should weaken biases of specific data bases, although it cannot get rid of them completely. One advantage of this system is that the source of each unavailability is given. For instance, if an unavailability is based completely on expert opinion, this fact is stated. If the unavailability is based on information from three generic data bases, these data bases are referenced.

3.3 COMPONENT HISTORY DATA

The use of a computerized component history data base (plant specific corrective maintenance record file) has the greatest potential to provide the most complete picture of age-related documentation available. While the plants of primary interest, i.e., older plants, may not have records of sufficient detail or quality to allow time-related degradation to be derived, the information points out degradation mechanisms with considerably more reliability than does other more accessible data.

The following paragraphs illustrate and contrast the differences observed between corrective maintenance records and the most commonly used aging-study data base.

The number of event entries during the 21-month period of available plant data (18) are shown in Table 3.1. This time interval was selected because of the availability of computerized plant information. Prior information resides exclusively on microfilm and is extremely difficult to extract. While the studied system had no reportable LERs during the time

TABLE 3.1. Information Contained in Generic Data Base and Plant Maintenance Records, by Event

Event	Number of Entries During 21-Month Period		
	Category	Plant	Generic Data Base
Functional Failure	1	113	19
Surveillance or Inspection, Problem Found	2	79	23
Surveillance or Inspection, No Problem Found	3	64	0
Work Done in Support of One of Above	Not Included in Analysis	98	0
Work Done; Reason Not Documented	4	63	0
Cancelled	Not Included in Analysis	32	0
Record Unclear	5	5	0
TOTAL		454	42

interval, the generic data base contained approximately 25% of the problems discovered through surveillances and only 10% of the total functional failure events reported in the maintenance history.

The circumstances surrounding the submittal of events were found to have a great impact on the number and completeness of the reported events. Generic data-base report frequency and, consequently, the apparent failure frequency increased dramatically in 1985. Taking the increased failure rate as an indicator of significant aging degradation would have been misleading; in reviewing the corrective maintenance logs, the failure rate was seen to be essentially constant. The actual reason for the increase was the plant's switch to computerized recordkeeping which included the desired generic data base formatted fields; this allowed entries to be submitted to the central processing facility from the computer terminal in only a few minutes.

3.4 OTHER SOURCES OF INFORMATION

Several other sources of component degradation and failure information were investigated in an attempt to secure additional information for analysis:

- Associated Research Investigations - Several research programs (19,20) which are directly applicable to service-water-related phenomena are available. These programs are both NRC and industry supported and will be used extensively in the corrosion investigation sub-task of the phase II assessment.

- Incident Investigation Reports - These reports evaluate nonroutine plant events or incidents that are considered to have a potential impact on reactor safety, either through component failure or a more implicit scenario (managerial breakdown). This evaluation may take the form of a fairly detailed root cause analysis and can therefore shed more light on occurrences than generic data. These reports are not, however, designed to provide information specific to aging research and cover only a small fraction of the plant failure inventory. For these reasons, their use of this task is quite limited.

- Subject Matter Experts - Experts in the subject of service water systems are considered to be those individuals who, through intimate association with the design, operation, or modification of system functions, have become uniquely qualified to make technical or intuitive judgments regarding the causes, results, and mechanisms of component degradation. Two categories of this type of expertise were explored for insights into further understanding of system phenomena.

  - Utility Operations and Maintenance Personnel - The level of understanding that comes from learning system function and design, and then from actually living with the results of day-to-day operation of that system, cannot be overemphasized. A great deal can be gained from the collective knowledge of the operators, maintenance personnel, and engineers whose efforts to maintain the system in a high state of operational performance gives them a substantial backlog of practical experience.

    In an effort to extract maximum benefit from out interviews with plant personnel, a questionnaire protocol was developed to record the full extent of previously undocumented plant knowledge. These sessions, lasting up to six hours, included key plant personnel--design engineering, operating supervision, equipment operators, chemists, maintenance foremen, and maintenance personnel. The information obtained during these sessions gave considerably deeper insights into failure occurrences than other sources in that they took advantage of the inherent root cause analysis performed by plant personnel. The dramatically differing results of attempting an even moderately rigorous root cause investigation with and without this information is illustrated in Section 3.

  - Industry Consultants - The other source of special knowledge is those consulting personnel who specialize in narrower aspects of the aging problem. Due to the broad perspective of PNL, we were able to consult with both government (21) and private sector representatives. This consultation took the form of managerial

guidance, based on previously successful projects of a similar nature and more subject oriented workshops aimed at broadening the knowledge base of the NPAR group at PNL. This type of interdisciplinary expertise, both from within and outside the laboratory, will be used extensively during the second phase of this project.

4.0 INTERIM AGING DEGRADATION ASSESSMENT

This section of the report examines current documentation; analyses content and use of component failure information; outlines the approach taken to analyze and interpolate the data; and presents the interrupted aging assessment of SWSs based on limited Phase-I data, with a summary of conclusions based on that assessment.

4.1 USES OF PLANT INFORMATION

Because of the expense of data acquisition and the perception that SWS performance and material condition change at a relatively slow and constant rate, the histories of components are not well documented compared to what is considered to be needed for a "safety prominent" system. With the emergence of service water as the "Achilles's heel" of accident scenario heat transfer to the ultimate heat sink, added attention is being given to measurement of critical system parameters. This sub-section examines the uses of service-water failure information with an eye to better defining future data requirements.

4.1.1 In-Plant Component Failure Follow

All commercial power plants, in one way or another, have a system for analyzing plant component performance. From overall plant heat rate to the establishment of component preventive maintenance frequency requirements, component failure data plays a formative role in plant operation and maintenance. Nuclear plants generally take this formulation a step further in that the requirements of a regulated industry demand a safety as well as a cost perspective. Component failure data is scrutinized not only for potential large capital drain and repeat offenders but is also subject to license demands embodied in the plant technical specifications. All operating plants meet these demands through carefully constructed operating procedures and periodic surveillance procedures, which provide instruction for implementing the Technical Specification requirements.

Increased component failure reporting and analysis has brought to light the magnitude of the cost and safety implications brought on by aging degradation of service water components. Utility response to this problem has largely been to mitigate these effects through corrective maintenance as they become manifest through component failures. The cost of these repairs has reached the point where inter-utility programs (22) have developed to explore methods of early detection and mitigation of degradation in SWSs.

4.1.2 SWS Plant Aging Analysis

Two methods of assessing aging mechanisms on service water components were examined. The first method analyzed specific failures using a root cause approach and expert knowledge. This technique attempted to identify the mechanisms responsible for each failure and then determine whether they were age-related. The second method attempted to deduce the aging rates of

specific components from the failure rate information. The resulting time-dependent failure rate could then be used in a computer model to determine the effects of aging on PRA output values.

The first method examined seeks 1) to ascertain whether or not a specific failure is age-dependent through use of both the root cause logic tree detailed in Appendix A, and 2) to verify this conclusions with the more intuitive responses of plant system experts. Through use of this composite data, root components, root parts, and failure mechanisms were identified for all maintenance events identified as constituting a functional failure. Specific failures and the associated failure mechanisms were then examined to discover whether they cold be identified as age-related. Once the principal age-related failure mechanisms are identified, they will then be examined in greater detail in the second phase of the project. By focusing on the principal failure mechanism, the Phase-II study recommendations will yield the maximum potential for increasing system reliability.

The second approach investigated the use of a computer software package which examines the effects of aging on component failure rates. Although root cause analysis is not specifically addressed, the Aging Data Analysis for Reliability Evaluations (ADARE) (23) software package uses the data obtained through root cause analysis of specific failures, as input. For each failure of the component type being examined, the user must know the failure time and whether the failure was age-dependent. (The failure time for a specific failure is the length of time between the current failure and most recent previous failure.) The program then computes a time-dependent failure rate based on the assumption that the aging rate of the component is linear.

4.1.3 Probabilistic Risk Assessments

Currently, the only method of quantitatively assessing the risk to the public from the operation of nuclear power reactors is the Probabilistic Risk Assessment (PRA). The quantitative aspect of the PRA provides a numerical value for the probability that the safety systems will perform their intended function for the environments and time period of interest. An acceptable level of risk can then be established and used as a yardstick to compare the operation of a given plant to the standard.

A probabilistic risk assessment is basically a statistical methodology used to determine the probability of core melt per reactor year of operation. The calculation of this overall core-melt probability relies on knowing the component unavailability for each component in the given system. As shown below, the overall component unavailability is the sum of mechanical unavailability (fraction of time that the component was inoperable due to failure) and test/maintenance unavailability (fraction of time the component was inoperable due to testing and maintenance), which are calculated directly from plant data.

$$Q_c = Q_m + Q_{t/m} \tag{4.1}$$

where Q_c = component unavailability
Q_m = mechanical unavailability
$Q_{t/m}$ = test/maintenance unavailability

Mechanical unavailability is a measure of the unavailability of a component caused by functional failures. It is the result of dividing the time that a component is unavailable (inoperable), due to all failure events, by the total operating list of the component. In equation form,

$$Q_m = \frac{\text{time inoperable due to all figures}}{\text{total lifetime of component}}$$

This is a dimensionless fraction that is usually given in terms of days per year of operation.

Test/maintenance unavailability accounts for the length of time a component is unavailable for use due to testing, inspections, and/or maintenance work. An unavailability rate is obtained by dividing the total number of days the component was declared to be inoperable by the total number of days that the component could have been operable if it had operated without any failures or testing. This unavailability rate, obtained from plant data, is then stated in terms of days per year of operation to make it compatible with the previous term:

$$Q_m = \frac{\text{time inoperable due to test and maintenance}}{\text{records recording interval}} \tag{4.3}$$

The total unavailability is then found by performing the addition indicated in Equation (3.1).

A time-line illustration of a single failure, repair, test, and return to service sequence is shown in Figure 4.1.

Summarizing, the PRA inputs necessary to accurately evaluate risk are the mechanical unavailability and the test/maintenance unavailability. These two input values are calculated from failure intervals and repair and testing unavailability periods which are calculated using plant data or the other data sources outlined in Section 2.

Table 4.1 summarizes the knowledge level requirements for each of the plant data uses discussed.

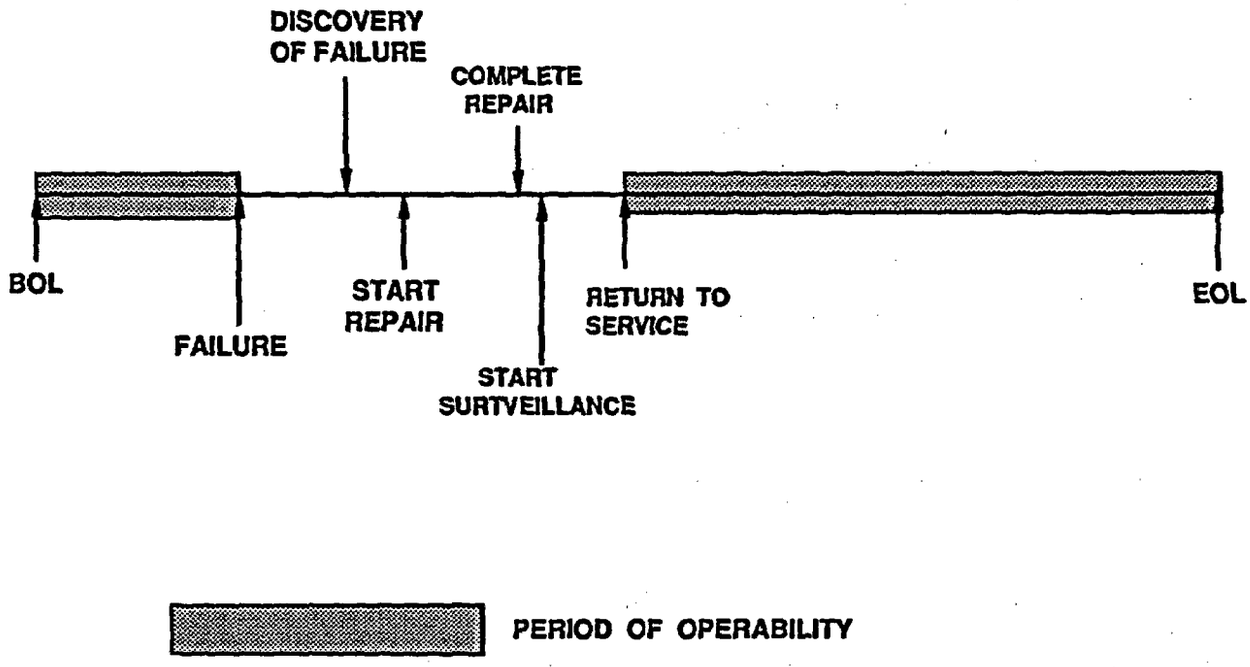

FIGURE 4.1. A Time-Line Illustration of a Single Failure

TABLE 4.1. Current Status of Component Failure Analysis Knowledge Requirements

Data Use Determination	Component Failure In-Plant	Probabilistic Risk Assessment	Aging
Failure Frequency	Yes	Yes	Yes
Unavailability	Usually	Yes	Yes
Root Cause Determination	Intuitive-Undocumented	No	Yes
Trending Required	Usually Qualitative	No	Yes
Component State History	No	No	Yes
Primary Motivation	Cost/Safety	Safety	Safety/Cost

4.2 EVALUATION OF PLANT DATA

The data used in this study for generating component unavailability values and for determining the primary age-related failure mechanisms were derived from the records of a single commercial PWR reactor and consisted of 324 plant maintenance records. These records document all SWS functional failures, surveillance tests, and inspections which occurred over a 21-month period. Relevant information was taken from these records and entered into a database. Table 4.2 details what information was available, as well as how complete it is, from an aging perspective.

4.2.1 Failure Classification

To begin the analysis process, each record was placed in one of the five categories shown in Table 4.3. Category 1 designates records which indicate that a functional failure occurred. Records indicating that a problem was discovered during a surveillance test or an inspection are placed in category 2. Some of these "problems" are classed as a functional failure, while other simply indicate a degraded state of the component. An attempt was made to analyze the entries in the first two categories using a formalized root cause logic (see Appendix A). The third category consists of records of surveillance tests for which no problems were found. Records which indicate that work was performed, but do not indicate why the work was necessary, are classed as category four. The final category is reserved for records which are incomplete and cannot be placed in categories one through four. Records of cancelled and support work were not included.

From this attempt at classification, it was found that the uncertainty in failure rate figures based on plant data appear to occur for two principal reasons:

1. In many cases, it was unclear from the maintenance records whether a functional failure occurred during the 21-month data interval. Many records state that maintenance work was carried out but do not say why. Other records state that work was performed after a surveillance test, but it is not clear whether a functional failure occurred during the test.

2. The plant records did not provide enough data points to calculate a failure rate for each distinct component. Calculations of failure rates must be based on a time period in which a minimum of one, and better still, two or three functional failures occur. Because some failures occur relatively infrequently, many component types had no records of functional failures during the 21 months examined, so a failure rate could not be calculated for these component types.

In addition, three factors were found to be the main contributors to the creation of uncertainty in the calculated unavailability rates:

TABLE 4.2. Summary of Plant Maintenance Data from an Aging Perspective

Plant Designation	Information Contained	Completeness of Information
Job Number	A unique number is assigned to each maintenance record.	In some cases, maintenance performed on multiple components is listed on only one maintenance record. In these cases a separate database record was created for each component.
Component Description	Describes where component is located within the system.	Frequently, this field only indicates that the component is located in the SWS, and no further details are given.
Component Type are	Identifies type of component.	No details are given. For instance, all types of valves simply identified as "valve."
Component Number	Individual component number.	Usually complete, although only one number is listed when multiple components were dealt with. The other component numbers can usually be found in one of the narrative fields.
Valve Type[a]	Type of value. (Manual, air operated, check, butterfly, etc.)	This information was obtained from plant diagrams or occasionally from narrative fields.
Size	Diameter of valves and pipes.	Usually not given. Occasionally found in narrative fields.
Sub-component[a]	Specific part within component boundary.	Occasionally found in narrative fields. Level of detail varies. For example, some valve maintenance records listed "internals" as subcomponents while others identified a specific internal part, such as the disk.

TABLE 4.2. (contd)

Plant Designation	Information Contained	Completeness of Information
Functional Failure[a]	Specific functional failure, if it can be determined that a functional failure occurred.	Must determine from narrative fields. Some fields specify that a failure occurred, although no records indicate that a failure did not occur.
Start Date	Date that a work order was obtained for given maintenance event.	Given most of the time. (Approximately 95% of the time.)
Stop Date	Date that maintenance event ended.	Given on approximately two-thirds of the records.
Category[b]	Assigned based on the reason job order was placed and the event outcome.	Assigned to all records, although many records were difficult to place in a category.
Coded Fields	Fields consist of codes identifying plant status, effect of failure on plant, method of discovery, etc. Similar to NPRDS coded fields.	Listed frequently for those records placed in categories 1 and 2. Almost never identified for records in other categories.
Failure[c] Description	Used to describe maintenance work and testing.	This field fails to identify whether a failure occurred. It is often used when no apparent failure occurred.
Cause of Failure[c]	Used for identifying cause of failure, problems, symptoms, or other observations.	Often it is not mentioned whether a cause was identified. Other times a cause is given when no failure is identified.
Work Performed[c]	Work is described. Replacement or adjustment of parts are described	Usually given, although reasons for the work are not always given.

(a) This information was taken from narrative fields and was not given in its own specific field on the plant records.
(b) Categories are not assigned to maintenance events by the plant. Each record was placed in a category to simplify analysis of the data.
(c) Narrative fields that are not used consistently, from which information such as size, valve type, etc., were taken.

TABLE 4.3. Twenty-One Month Summary of Maintenance Records

Action	Category	Number	Fraction of Total Job Reports
Functional failure	1	93	0.29
Surveillance and inspection (problem found)[b]	2	99	0.31
Surveillance and inspection (no problem noted)	3	64	0.20
Work done (reason unknown)	4	63	0.18
Unclear[c]	5	5	0.02

(a) Maintenance records for support work or cancelled work are not included. (no callout for this footnote)
(b) Twenty of the problems noted were identified as functional failures.
(c) Not enough information to place in any of the previous categories.

1. Not all records list work order start and stop dates. The use of calculations based only on those records that list both start and stop dates would clearly underestimate the actual unavailability rates. An attempt at correction has been made by multiplying the calculated unavailability rates by the inverse of the fraction of records which have both start and stop dates listed. This method of correction is crude, and will be replaced by a more accurate method in future phases of this study.

2. In some cases, components may have been unavailable before the listed start date or after the stop date. It is unknown how long a component was unable to function before discovery of a failure. It is also known, for instance, that in some cases valve disks are removed from valves with the intent of replacing the valve at the next outage. The stop date on the maintenance record will be listed as the date that the disk was removed, and a separate maintenance record will be started when the valve is actually replaced. This method does not record that the valve is actually unavailable during the time from when the disk is removed until the valve is replaced.

3. Because specific failure mode information is not always available, an additional uncertainty exists in that the failure mode category may be incorrect.

In summary, the data provided by the plant was not sufficient to calculate an accurate failure rate or unavailability rate for each specific component. Improved recordkeeping and input from system experts could substantially decrease these uncertainties, producing data which would then be suitable for use in aging or PRA input calculations.

4.2.2 Aging Assessment Based on Plant Data

It is essential, in the process of evaluating the effect of aging on the plant, to be able to identify, with a high degree of confidence, the failure mechanism responsible for each failure or problem and whether this mechanism is age-related or not. Once this has been accomplished, the effects of aging on risk may be evaluated. The techniques used to identify age-related failures and then assess the aging impact on risk are discussed in this section.

Root cause analysis (RCA) is a method for gathering information concerning a component failure and analyzing it is such a way that the uncertainty in the interpretation of the exact nature of the failure mechanism is minimized (see Appendix A). The failure mechanisms involved in a specific component functional failure, if sufficient information is available, can be established by performing a root cause analysis on the information provided on plant maintenance records. To accomplish this goal, a logic flow diagram (logic tree) was designed to define and facilitate the process. Using only the information given in the plant records, a strict interpretation of root cause analysis fails to identify most root causes or failure mechanisms with even a low degree of confidence.

Using a questionnaire protocol to sample plant personnel knowledge has shown that those involved directly with SWS maintenance are able to identify root cause information which the maintenance data alone could not. Experience has shown that the plant personnel are quite accurate in their diagnoses. There are two reasons that satisfactory conclusions are frequently reached by maintenance personnel in cases where strict application of root cause analysis has failed. One is that maintenance personnel have access to knowledge which is not always documented on plant records. At the actual time of the event, the maintenance personnel perform a type of informal root cause analysis of their own to determine the circumstances of the event and what corrective action should be taken. They do not, however, document every piece of information that they use in deciding whether a failure has occurred, what caused a suspected failure, or what action should be taken. Instead, they may only document the fact that a failure occurred and corrective action was taken, leaving out the facts that enabled them to make their decisions. Therefore, when the records are examined later, a good part of the information needed for the root cause analysis is missing.

A second advantage that experienced personnel have is their background experience and knowledge or previous failures. Plant personnel often have knowledge of previous maintenance work and/or failures of the component being examined. This may enable them to immediately rule out certain possible causes or to associate specific symptoms with certain causes.

Plant data classified as belonging to categories 1 or 2 was examined a second time, incorporating previously undocumented information obtained through conversations with in-plant experts. The logic tree results from this analysis identified far more details than the results of the first analysis, which did not incorporate undocumented information. A summary of the results of the two analyses are shown in Tables 4.4 and 4.5.

The results of the second analysis of the plant data show that corrosion and material accumulation and wear are the most frequently occurring failure mechanisms. This outcome is consistent with the beliefs of plant experts, who suspect that many of the unidentified valve failures are also due to corrosion. The two photographs of typical open system service water shown in Figures 4.2 and 4.3 bear witness to this conclusion. Figure 4.1 demonstrates the degree of accumulation of sediment (approximately 1-in. thick) on an 18-in. gate valve removed following several years of open system service. Figure 4.2 shows a through-wall pitting attack on a 3-in. pipe coupling, also exposed in the same raw water environment. Table 4.6 gives a numerical perspective of the failure mechanisms identified by the logic tree in the second analysis of the plant data.

4.2.3 PRA Input Illustration

Failure rates (number of failures/unit time) were calculated from plant data for all component types having records of failures during the examined 21 months. These time-specific failure rates were then time scaled to obtain a mechanical unavailability for each component type which would allow a direct comparison with IEEE Standard 500 data. Ninety-percent confidence intervals were calculated for these mechanical unavailabilities, again for comparison to values in IEEE Standard 500, which are also presented using 90% confidence intervals. The Methods used in calculating the IEEE values are discussed in Section 3.2.

Table 4.7 provides a comparison of mechanical unavailabilities calculated from plant data and IEEE Standard 500 values. Only those components for which comparable IEEE values were also available are shown. Table 4.7 shows that for generically comparable items (e.g., pump failures and all valve failures) the plant specific data falls close to the best estimate and within the 90% confidence range. As would be expected, a limited components category (strainers) deviates more from the norm but still falls within the 90% values.

This example provides a single-case illustration for preferring IEEE data, as is done in more PRA applications, over using the existing data base that is commonly seen in most aging analyses.

TABLE 4.4. Logic Tree Results of First Analysis[a]

Entry	Identified	Not Identified	Percent Identified
Root Part[b]	8	140	0.05
Root Cause	1	147	0.01
Failure Mechanism	78	70	0.53
Failure Mechanism Investigated	13	135	0.09
Root Cause Confidence[c]	0	148	0.00
Failure Mechanism Confidence[c]	0	148	0.00

(a) Using only recorded plant information (categories 1 and 2) and strict root cause analysis.
(b) Number of root components identified was not recorded during this analysis.
(c) Identified as high confidence or not identified as high confidence.

TABLE 4.5. Logic Tree Results of Second Analysis[a]

Entry	Identified	Not Identified	Percent Identified
Root Component	171	21	0.89
Root Part	152	40	0.79
Root Cause	62	120	0.32
Failure Mechanism	111	81	0.58
Failure Mechanism Identified	67	125	0.35
Root Cause Confidence[b]	61	131	0.32
Failure Mechanism Confidence[b]	65	127	0.34

(a) Using plant records (categories 1 and 2) and undocumented knowledge gained from conversations with plant experts.
(b) High confidence level (>95%) in occurrence of conclusion.

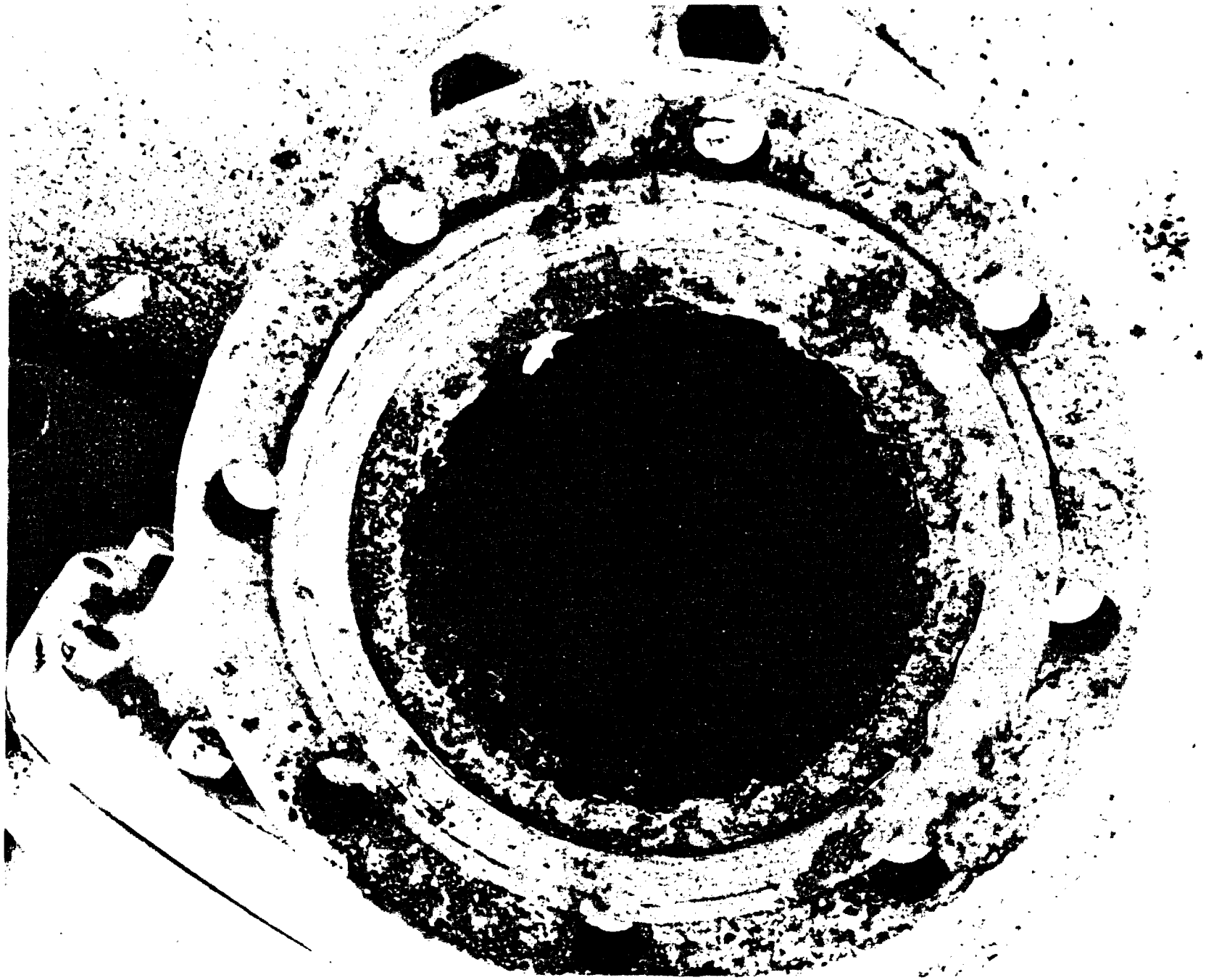

FIGURE 4.2. Sedimentary Corrosion on 18-in. Gate Valve

FIGURE 4.3. Through Wall Pitting in 3-in. Pipe

TABLE 4.6. Failure Mechanisms Identified in Second Analysis[a] of Plant Data

Mechanism	Number of Entries	Number with Functional Failure	Fraction with Given Mechanism
Corrosion	49	18	0.26
Loss of Material Properties	1	0	0.01
Environmentally Assisted Crack Growth	1	0	0.01
Wear	18	13	0.09
Biological or Inorganic Accumulation	32	25	0.17
Evaporation or Degradation of Lubricant	2	1	0.01
Cause no previously identified (not age related)	5	2	0.03
Not appropriate, insufficient evidence	81	54	0.42

(a) Entries listing a functional failure or other problem (categories 1 and 2) examined using logic tree and undocumented information.

TABLE 4.7. Failures per Item per Million Hours (mechanical unavailability)

Component	Plant[a]		IEE Standard 500[a]		
	Low	High	Low	Best Estimate	High
Motor driven pump	156	418	52.9	228.0	880.0
Pump motor	0[b]	--	1.E-2	0.7	4.0E3
Strainer	244	552	0.3	1.2	50.E3
Valve Operator	11	30	1.0	62.0	180.0
Valve (all types)	6	10	0.03	1.4	3.2E3
- Check	16.3	83.2	--	3.2	--
- Manual	4.8	9.4	--	0.2	--
- Butterfly	0.4	14.0	0.3	1.2	345
- Globe	2.4	12.3	0.2	3.5	174
- Gate	4.1	8.3	0.2	1.9	46.1

(a) The low and high values are given for a 90% confidence interval around the calculated mechanical unavailability. This means that 90% of the time the actual mechanical unavailability of the component lies within this interval.
(b) No functional failures occurred during the time period examined.

5.0 CONCLUSIONS AND RECOMMENDATIONS

This section presents conclusions and recommended actions based on the PNL Phase-I SWS aging degradation assessment.

5.1 CHANGES RECOMMENDED FOR COMPUTATION OF PRA INPUTS

Although recognizing the additional burden that will be placed on plant personnel to document more detailed failure information, it is essential to the resolution of safety-system aging and plant life extension issues to obtain expanded data which will allow a meaningful analysis. A few changes and additions in plant recordkeeping combined with implementation of root cause analysis at the plant will greatly reduce inherent uncertainties, making plant data adequate for calculating PRA input values and assessing aging mechanisms.

Sufficient fields should be provided on maintenance records to allow the calculation of both failure rates and unavailability rates for service water system component types. Frequently, information in unavailability fields is not complete, not present, or the information is randomly placed in the narrative fields, making it difficult to locate. Because the narrative fields are used randomly, information intended for a particular narrative field may be located elsewhere on the record or may not be recorded at all. Effectiveness of plant data in calculating PRA input values could be greatly increased by four minor changes in current recordkeeping methods:

1. Record time actual work started - It was frequently difficult to determine from records the actual length of time that the component was unavailable for service. The start date listed is the time that the maintenance or test was requested, not the time that the actual work started. This means that if the component is still functioning in a degraded state, then the unavailability time would only cover the time during which the component was being repaired, replaced, and/or tested.

2. Record the data of last test or repair - It is often unknown how long a component has been unavailable before discovery of the problem. This uncertainty may be corrected if it is known when the component was last known to be functioning properly. Therefore, the date of the last test or repair of each component should also be recorded on maintenance records.

3. Add a failure category field - The failure description field is not used effectively. It does not differentiate between cases in which a failure occurred and cases in which the component has degraded but still works. A category field, with functional failure categories similar to those used in this study, would make the records much easier to work with. A category field would make it possible to work only with those records in which a failure occurred, or with only records of surveillance tests. This field should contain a coded response to indicate whether a failure has occurred, whether the component is degraded but still working, or

whether no problem was found. In addition, it would be helpful to create a category indicating tests in which an actual failure occurred.

5.2 RECOMMENDED PLANT RECORD CHANGES FOR AGING ASSESSMENT

Information on current plant maintenance records is not sufficient for assessing aging. The undocumented detailed information used by plant personnel in reaching their conclusions about each case is needed in order to obtain useful results from a root cause analysis. These results may then be analyzed to reach conclusions about component aging.

There is no field on current records for indicating which part of the component failed or degraded. Sub-parts are sometimes listed in narrative fields, but this information is often unspecific. For instance, when a valve fails, the maintenance report frequently states that the valve internals have corroded, but the specific internals which corroded are not named. The specific part within the component which failed needs to be known to perform a root cause analysis. A field for this information should be added to plant maintenance records.

Once a system is implemented which identifies failures and classes them as aging-related or random, aging rates and time-dependent failure rates can be used to ascertain the effects of aging on risk. Certain details about the components' histories are necessary for calculating these rates. Fields should be provided for entering this information if these rates are to be calculated in the future. This information includes the date the current component was installed, the date of the last failure or test, and what types of maintenance the component has received since installation.

Implementation of the modifications recommended in this section, accompanied by an effort to fully complete maintenance records would greatly improve the usefulness of plant data. This improved data would then be adequate for computing PRA inputs with acceptable levels of uncertainty, and for assessing the effects of specific aging mechanisms on risk and plant life. A summary of suggested changes in the plant recordkeeping system is shown in Table 5.1.

5.3 CONCLUSIONS FROM PLANT DATA

The information available on plant maintenance records examined during this task is insufficient by itself for a high level of confidence in an accurate root cause analyses or aging assessment. Improvement of recordkeeping and implementation of a root cause analysis system, however, would make both root cause analyses and aging assessment possible and accurate.

TABLE 5.1. Summary of Suggested Changes in Plant Recordkeeping System

Information Needed	Needed For[a]	Currently Available	Suggested Changes
Component number	A,U,F	on records	Use a separate record for each component.
Component sub-part	A	no	The specific part of the component which has failed or degraded should be identified.
Unavailability start and stop dates	U	no	Dates indicating length of time component was unavailable should be listed.
Failure Category	U,F,A	no	Records should be placed in categories similar to those used in this report. This would identify which records to use in PRA calculations.
Mechanism	F,A	no	The cause of failure field should specify what mechanism was responsible for the failure or problem.
Component History	A	no	Fields for indicating when component was installed, last maintenance or test date, and previous failure histories would aid in aging assessment and root cause analysis.

(a) The given information is needed for: A = Aging assessment, U = Calculation of Unavailability rate, and F = Calculation of Failure rate.

Work with the plant data has produced three main conclusions:

1. Close work with plant data has shown several areas in which plant maintenance recordkeeping needs to be improved.

2. Attempted root cause analysis of the data suggests that this type of analysis would be most effective if it were carried out at the plant by those who actually participated in the maintenance work.

3. Finally, the results of root cause analysis done on the plant maintenance records and corroborated by industry experts and plant personnel suggest that corrosion, material accumulation, and wear are the three SWS failure mechanisms that warrant further investigation.

REFERENCES

1. B. M. Norris, and J. P. Vora. 1987. Nuclear Plant Aging Research Program Plan. NUREG-1144, U.S. Nuclear Regulatory Commission, Division of Engineering, Office of Nuclear Regulatory Research.

2. U.S. Nuclear Regulatory Commission. 1982. Report on Service Water System Flow Blockages by Bivalve Mollusks at Arkansas Nuclear One and Brunswick (Nuclear Power Stations), Office for Analysis and Evaluation of Operational Data.

3. Office for Analysis and Evaluation of Operational Data. 1983. Evaluation Report No. AEOD/E319, Boifouling at Salem Units 1 and 2.

4. U. S. Nuclear Regulatory Commission. 1982. A Study on Service Water Fouling, Operating Reactors Assessment Branch.

5. D. Eisenhut. 1982. Proposed Recommendations for Improving the Reliability of Open Cycle Service Water Systems. Memorandum from S. Hanauer, March 19, 1982.

6. P. Hayes. 1983. Generic Safety Issue No. 51, Improved Reliability of Open Service Water Systems. Memorandum from W. Minners, April 5, 1983.

7. U.S. Nuclear Regulatory Commission. 1983. A Prioritization of Generic Safety Issues, NUREG-0933, Office of Nuclear Reactor Regulation (with updates through March 1987).

8. U.S. Nuclear Regulatory Commission. 1976. Quality Group Classifications and Standards for Water-, Steam-, and Radioactive-Waste-Containing Components of Nuclear Power Plants, Regulatory Guide 1.26, Office of Standards Development.

9. U.S. Nuclear Regulatory Commission. 1976. Ultimate Heat Sink for Nuclear Power Plants, Regulatory Guide 1.27, Office of Standards Development.

10. S. Z. Bruske and L. C. Cadwallader. 1985. Trial Application of the Candidate Root Cause Categorization Scheme and Preliminary Assessment of Selected Data Bases for the Root Causes of Component Failures Program, EGG-EA-6842.

11. EG&G, Inc., Idaho Falls, Idaho. Nuclear Power Experience. 1985-1988. Published by S. M. Stroller Corp., 1919 14th St., Suite 500, Boulder, CO 80302.

12. U.S. Nuclear Regulatory Commission. 1986. Licensee Event Report Compilation, NUREG/CR-2000, ORNL/NSIC-200, Office for Analysis and Evaluation of Operational Data, December 1985 through September 1986.

13. U.S. Nuclear Regulatory Commission. no date. Nuclear Plant Reliability Data System. A Proprietary Institute of Nuclear Power Operations database; portions made available through USNRC, Office of Nuclear Regulatory Research.

14. L. C. Meyer, and P. T. Jacobs. 1987. An Evaluation of Information Sources for Aging Research on Reactor Protection Systems, NUREG/CR-4804, EGG-2487.

15. Murphy, G. A., R. B. Gallaher, M. L. Casada, and H. C. Hoy. 1984. Survey of Operating Experience from LERs to Identify Aging Trends, Status Report; NUREG/CR-3543 ORNL/NSIC-216.

16. Meale, B. M., D. G. Satterwhite, J. L. Plum, and P. M. McGuire. 1986. Identification of Aging Root Causes of Component Failures for Service Water and 1E Electrical Power Distribution Systems, EGG-REQ-7227, EG&G Idaho, Inc., Idaho Falls, ID.

17. IEEE Standard 500. 1983. IEEE Guide to the Collection and Presentation of Electrical, Electronic, and Sensing Component, and Mechanical Equipment Reliability Data for Nuclear Power Generating Stations. The Institute of Electrical and Electronics Engineers, Inc., New York.

18. D. B. Jarrell, J. Huenefeld, S. White, and P. Zimmerman. 1987. Service Water System Site Information Visit, PNL-6502, Pacific Northwest Laboratory, Richland, WA.

19. K. R. Hoopingarner, and J. W. Vause. 1987. Aging of Nuclear Station Diesel Generators: Evaluation of Operating and Expert Experience. NUREG/CR-4590, Vols. 1 and 2, PNL-5832, Pacific Northwest Laboratory, Richland, WA.

20. D. A. Neitzel, K. I. Johnson, T. L. Page, J. S. Young and P. M. Daling. 1984. Bivalve Fouling of Nuclear Power Plant Service-Water Systems, NUREG/CR-4070, PNL-5300, Pacific Northwest Laboratory, Richland, WA.

21. Bitten, E. R. 1985. N-Reactor Production Assurance Program-BOP Evaluations; Task 1: Buried Piping, UNI-3133. United Nuclear, Inc., Richland, WA.

22. Electric Power Research Institute. 1987. Proceedings: 1987 Seminar on Nuclear Plant Layup and Service Water System Maintenance, Charlotte, NC.

23. W. E. Vesely. 1987. Risk Evaluations of Aging Phenomena: The Linear Aging Reliability Model and its Extensions, NUREG/CR-4769 Scientific Applications International Corporation, Columbus, OH.

APPENDIX A

ROOT CAUSE SCHEME

APPENDIX A

ROOT CAUSE SCHEME

A LOGIC TREE FOR INFORMATION ASSESSMENT AND AGING IDENTIFICATION

Before starting a root cause analysis for aging research using plant-related data, several basic questions about the validity and reliability of that data need to be answered. Without an a priori knowledge of the data, the results of the research may be misinterpreted or even counterproductive to the investigation effort. Root Cause Analysis (RCA) is not new to the utility industry. The identification of the correct fundamental problem associated with a component malfunction has always been a hallmark of the astute engineer, foreman, operator, or mechanic. While intuitively shaped through experience, very little formal, documentable structure has historically been generated to act as a guide to this central issue. As a result, a wide spectrum of methods have been applied with varying degrees of documentation and consequently a wide band of uncertainty in the end product.

Root cause analysis is a subjective process because component environmental history and failure condition information is often incomplete and multiple possibilities exist for the same symptoms. In order to reach a valid conclusion, the analyst applies judgement and data interpretation to rule out all but one possibility for the root cause of a component failure. In some cases, the field engineer may feel obligated to make a root cause identification when, in fact, it may be best to label the cause unknown. The analyst may not be aware of the multitude of decisions that were made to reach a conclusion. Thus the lack of information, communication, and unknown and untraceable decisions, render root cause analysis highly uncertain, potentially inconsistent, and potentially incorrect. An aging assessment or license extension program will undoubtedly require more consistent, and in-depth data, to instil that the program confidence that will produce adequate, justifiable regulatory guidelines.

This appendix is intended to help define the RCA process, providing a perspective necessary to formulate a uniform approach, depth of investigation, and documentation. The basic questions of what failed, why, when, and how, must specifically relate component failure to the aging phenomena.

ANATOMY OF A FAILURE

Root cause categorization schemes (A-1 and A-2) have been performed using various data for input (A-3, A-4) to fit component failures into supposedly relevant domains. A step back must be taken to approach the larger question of the root origin of the failure. To being this search, an important definition must be accepted, that of the root cause analysis of a component failure as

The process of determining the fundamental degradation mechanism associated with a component failure, such that, if corrected, it will prevent a recurrent failure of a similar nature.

From this definition, it follows that data on three elements must be known to provide the essentials of root cause analysis: 1) the fundamental component (ground element) that failed, 2) the degradation mechanism which lead to failure, and 3) the operational history of the component.

The prospects for a component successfully accomplishing its design mission hinges on three basic factors each of which has the ability to produce a premature component failure: 1) design or application, 2) changes in the component's environment to conditions beyond the design envelop, and 3) aging degradation. Each area is examined in the following in more detail to provide a suitable definition in the context of an aging/failure related study.

DESIGN INADEQUACY

Every component in a nuclear power plant is designed to operate within a limited, specified (or implied) set of operating conditions. Specifying placement of a 400-psi pressure gauge in a system that will be exposed to 2000 psig is obviously a design error. Design specifications apply to a wide range of potential stressors that the component is expected to be exposed to during its design life. Typically, these include specified envelopes for the following:

- temperature
- pressure
- lifetime
  - -- cycles
  - -- wear conditions
  - -- duration
- maintenance requirements
- deterioration (degradation) rate.

The failure of a component when it has clearly been operated within its design envelope is by definition a design inadequacy.

ENVIRONMENTAL ABNORMALITY

The failure of a component through the violation of the design envelop from improper maintenance or operation is termed an environmental abnormality. Even assuming that all predictable stressors are taken into account

in designing a component, the design envelop can be breached by operation or maintenance of the component outside its design specifications. Typical examples are a steam generator operated outside its pH limits, a pump that is operated under runout conditions, or an incorrect fuse that immediately blows when it is energized. Personnel errors in operation and maintenance of a component generally fall in this category, because they frequently result in material environments outside the design specification envelop.

AGING DEGRADATION

Aging degradation pertains to stressor that are either not anticipated in the design process or are more severe than anticipated even though they still do not exceed the design specifications of the device.

Aging degradation failure is defined as failure of a component at less than design life resulting from manufacturing flaws or unanticipated environmental stressors. This catch-all category includes a large portion of the age-related failures from what may be considered "implied" design specifications, i.e., assumptions on the part of the designer and/or the component user concerning the quality of the manufactured product or the severity of the component environment which, in practice, turn out to be ill-founded. These include but are not limited to the following:

- manufacturing defects
- an operational parameter that results in premature (lifetime less than design) failure of component from such influences as
  - -- erosion
  - -- corrosion
  - -- biofouling
  - -- organic attack
  - -- vibration
  - -- embrittlement.

Examples here include 1) a heat-treatment-induced crack in a recirculation pump shaft, 2) a service water pump impeller, which must be replaced every eighteen months because river water contains a higher suspended solid concentration than anticipated, and 3) a emergency diesel generator which is "tested to death" in accordance with technical specifications. These failures are what are sometimes termed "aging failures" in the classical sense.

APPROACH TO ROOT CAUSE

To begin formulating an overall approach to root cause analysis from an aging perspective, the definition of aging as used in this study bears repetition:

The cumulative changes with the passage of time that may occur within a component or structure due to one or ore of the following factors:

- **natural processes during operation**
- **external stressors caused by storage or operation**
- **external stressors caused by storage or operation**
- **wear caused by operational or test cycling**
- **improper installation, application, operation or maintenance.**

This definition of aging spans all three categories of root cause. The problem is not merely one of aging in a narrow sense, i.e., old or worn out, but encompasses all paths that lead to a component failure. A generalized root cause scheme which can accommodate any abnormal event is, therefore, required to meet the needs of a broad aging-research charter. To provide an initial approach to the problem, a logic diagram (Figure A.1) was developed to provide an explicit structure for a repeatable root cause analysis methodology and to define what is meant by, and the information required for, a viable root cause investigation. This figure is necessarily preliminary. It is intended only as a framework on which to build a practical root cause analysis system in future work.

The figure is designed to treat failure events after-the-fact, as if the researcher were at the plant for the purpose of determining why component Z has failed. It presupposes no knowledge of the event but has inherent to it an intimate knowledge of the system and, particularly, of the component function and environment. It is intended that one should start with collected failure knowledge at the top of page one and attempt to reach a conclusion box at the bottom. To state that a root cause analysis has been adequately performed for a given component failure, it must be shown that process shown in Figure A.1 has been followed.

The extent that additional knowledge is pursued to define the root cause of failure must be balanced by the monetary and risk significant of the component. This aspect will be treated in Phase II of the SWS study.

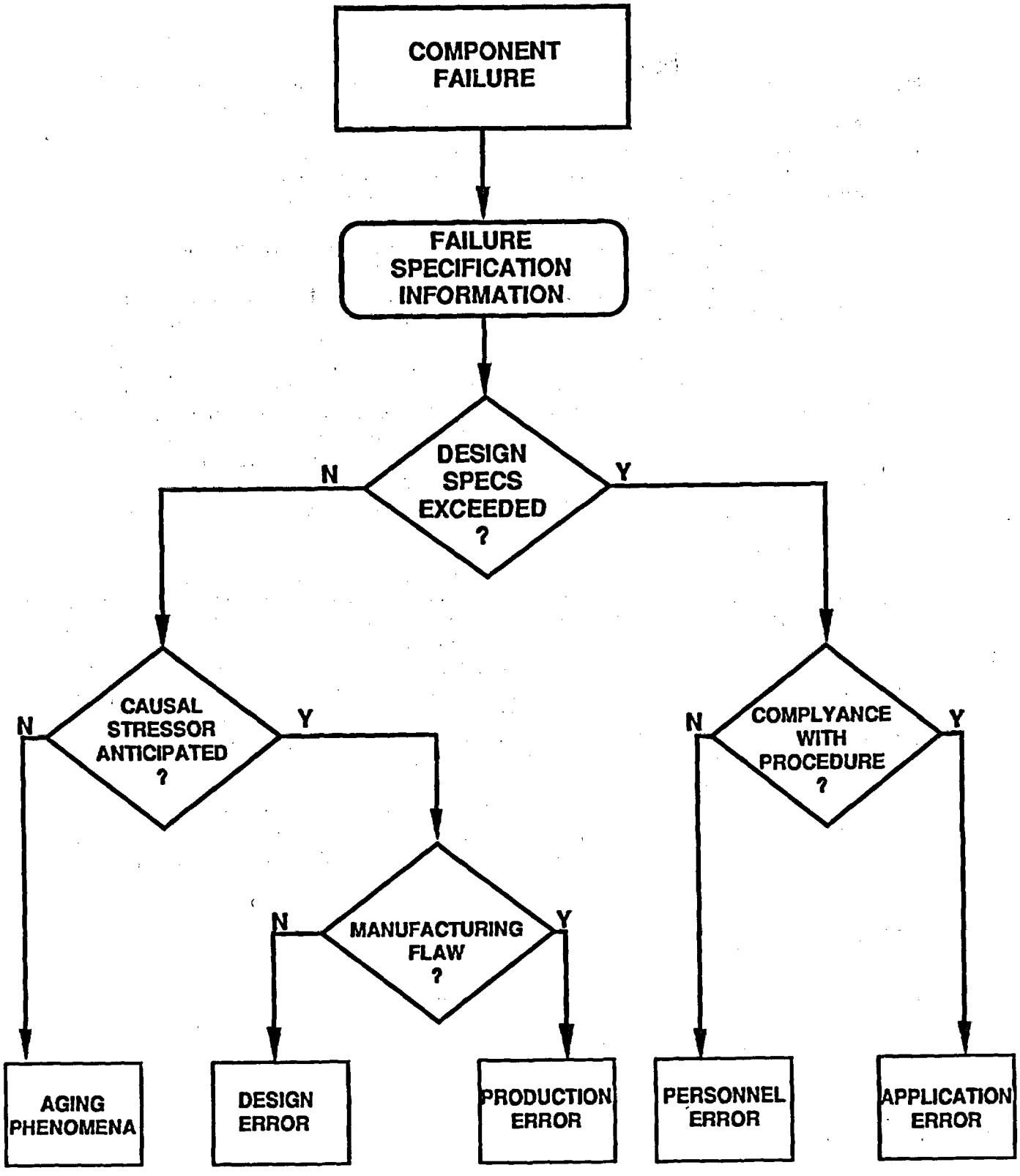

FIGURE A.1. Basic Failure Analysis Scheme

SUMMARY

A component's chance for realizing its design life requirements without sustaining a failure depends on the following factors:

DESIGN

1. component engineered to meet all design parameters
2. component application within the design envelop
3. QC programs which guarantee defect-free manufacturing and modification processes

ENVIRONMENT

1. proper equipment operation within design specifications
2. proper preventive maintenance of limited lifetime components

AGING

1. identification of all aging stressors and their magnitudes
2. maintenance programs that identify, monitor, and effectively mitigate aging degradation.

While the above goals are obviously an idealization and unattainable, their pursuit is, nevertheless the horizon of reliability engineering.

REFERENCES

A-1. Meale et al. "Identification of Aging Root Causes of Component Failures for Service Water and 1E Electrical Power Distribution Systems." EGG-REQ-7227, July 1986.

A-2. Murphy et al. "Survey of Operating Experience from LERs to Identify Aging Trends." Status Report, NUREG/CR-3543, ORNL/NSIC-216, November 1983.

A-3. NUREG/CR-1363. "Data Summaries of Licensee Event Reports of Valves at U.S. Commercial Nuclear Power Plants."

A-4. Kahl and Borkowski. "Component Aging Illustrated in Maintenance Histories from IPRDS." Presented at 1984 American Nuclear Society Annual Meeting, Conf-840614-84, DE84014294.

APPENDIX B

SERVICE WATER SYSTEM CORROSION MECHANISMS

APPENDIX B

SERVICE WATER SYSTEM CORROSION MECHANISMS

INTRODUCTION

Corrosion has emerged as a major aging-degradation factor in nuclear plant service water systems (SWS). System materials are subject to relatively aggressive waters with a wide range of compositions, including the following: sea, lake, river, and cooling pond. Normal operation and standby conditions each have special corrosion considerations. The main report identifies the two principal service water system types: open systems (predominant) (Figure 2.2) and closed systems (Figure 2.3). The open system and primary side of the closed system are subject to similar environments, given a common water source. The secondary side of the closed system is serviced by treated water, so corrosion can be mitigated by proper choice and control of the water chemistry. Service water systems are also exposed to a variety of biological species that frequently enter into the corrosion phenomena.

This section provides a brief overview of service water system corrosion phenomena. This Phase-I NPAR SWS study is representative of an investigation of a single plant (B.1). Literature was studied for all U.S. plants (see Table 1.1 in Section 1.3.2), and expert opinion invoked, to gain insights on generalizing the single-plant findings. The Phase-II study will address corrosion and water treatment of other representative plant configurations in more detail.

MATERIALS

The predominant construction material for service water systems is carbon steel. Other materials commonly used are copper and copper-base alloys, monel (a nickel-copper alloy), and stainless steels (300 and 400 series). Copper-base alloys are widely used in heat exchanger applications because of inherently good corrosion resistance combined with good mechanical properties, excellent thermal conductivity, and ease of soldering or brazing. Stainless steels, particularly types 304 and 316, are used increasingly as nickel-base replacement materials to improve corrosion resistance.

Table B.1 summarizes corrosion observations for components and materials in one plant. We are aware of one plant that is replacing carbon steel components with stainless steel to reduce the impact of corrosion. All pipe and valves with diameters 3 in. and smaller, and valve internals for larger valves, are being replaced with stainless steel. Heat exchanger leaks are typically repaired by plugging leaking tubes. When too many tubes are plugged, the tube bundle is replaced. The copper-nickel tubes are sometimes replaced with stainless steel. Valve stems sometimes are replaced with 17-4 PH steel.

TABLE B.1. Observed Damage Mechanisms

Component	Material	Observed Degradation	Damage Mechanism
Pipe	Carbon Steel	Pin-hole leak	Tuberculation or concentration cell corrosion from deposits
		Plugging	Rust and biological and/or inorganic deposition
Check valve swing arm	Carbon steel	Swing-arm failure	Rust which is removed by chaffing as the arm rotates
Gage valve disk	Carbon steel	Disk separated from stem	Rust
Heat exchanger	90-10 CuNi	Leak	Corrosion pitting
		Leak	Denickelification
		Plugging	Tuberculation fragments

Compare with GALL table for NUREG/CR-5379 Vol. 2.

CORROSION MECHANISMS

There is potential for corrosion and other damage in SWSs that either is not noticed or has not proceeded far enough to cause failures. Table B.2 shows potential corrosion mechanisms that are promoted by combinations of material, environment, and stress. These are prime candidates for a systematic degra-dation evaluation planned for phase II. The damage mechanisms in heat exchangers have been observed and identified by multifrequency eddy current testing. The pipe damage mechanisms are identified from handbook recommendations. Most subsystems contain carbon steel and stainless steel pipe and fittings. Various stainless steel alloys are used: 304 SS for pipe, and 410 and 17-4 PH SS for some valve stems. Heat exchanger tubes are stainless steel, copper-nickel and copper. Copper-bearing alloys may be susceptible to ammonia attack in raw waters where decaying organic matter or fertilizers are sources of ammonia. Ammonia-induced stress corrosion cracking of Admiralty brass could be a consequence of exposure to ammoniated waters. Stainless steels are susceptible to stress corrosion cracking in oxygenated, chloride-bearing waters.

TABLE B.2. Potential Corrosion Factors

micro-biologically induced corrosion
oxygen concentration cell
grounding connections
dissimilar surface conditions
dissimilar metals
dissimilar soils
errosion corrosion
weldment HEZ areas
deposition
stagnant flow areas
chloride tunneling (stainless steel)
intergranular stress corrosion
hydrogen embrittlement

Some portions of the SWS are stagnant, inviting deposition and certain types of corrosion. Other regions are subject to relatively high flow rates resulting in erosive attack.

A review of aqueous corrosion mechanisms for copper-base and iron-base alloys has been published (B.1), including uniform corrosion, galvanic attack, stress corrosion cracking, intergranular attack, crevice corrosion, pitting, dezincification, fretting corrosion, corrosion fatigue, erosion, and corrosion. Corrosion product transport is also briefly reviewed. An EPRI study of failure causes in condensers has relevance to corrosion in SWSs (B.2). Biofouling has emerged as a major consideration in open water systems, reflected in Reference B.3 through B.9. Microbiologically-induced corrosion (MIC) is treated in a later section of this appendix.

A review of aqueous corrosion mechanisms for copper-base and iron-base alloys has been published (B.1), including uniform corrosion, galvanic attack, stress corrosion cracking, intergranular attack, crevice corrosion, pitting, dezincification, fretting corrosion, corrosion fatigue, erosion, and corrosion. Corrosion product transport is also briefly reviewed. An EPRI study of failure causes in condensers has relevance to corrosion in SWSs (B.2). Biofouling has emerged as a major consideration in open water systems, reflected in References B.3 through B.9.

CORROSION STRESSORS IN SWSs

Of the wetted systems in NPPS, the SWS seems to have the most aggressive combination of corrosive factors, even though the temperature range is relatively low (~0-50°C or 32 to 120°F). Effects of electrical, mechanical, and thermal factors are reviewed briefly here. They will be addressed in detail in the Phase II investigation, including potential effects of accident and post-accident scenarios.

Electrical

To date this study has not addressed the importance of stray currents in SWS corrosion, but the electrical effects need to be considered for the buried and submerged structures and piping (B.10). Galvanic factors from dissimilar metal couples, differential aeration, etc., must also be considered. Cathodic protection systems can be effective in mitigating corrosion in soils and impure waters, if the systems are properly designed and maintained (e.g., timely replacement of sacrificial anodes).

Mechanical

Service water system piping and components are subject to vibration. While not generally excessive, in some cases the vibrations can contribute to fatigue. In extreme cases, water hammer has caused obvious damage to specific components. Water flow is sufficiently high in other cases (12 to 15 fps) to contribute to erosion, exacerbated by chemical factors, and in some cases, by biological species (e.g., mollusks) that cause local flow perturbations. Cavitation damage, particularly on pump materials, is a potential phenomenon.

Thermal

Water intake conditions are ambient, varying from hear freezing up to ~90°F over the range of SWS locations. Outlet conditions also vary with season and location, in the range of 90 to 120°F.

ENVIRONMENTAL FACTORS

The chemical, radiation, and atmospheric, or underground factors in the corrosion of SWSs are briefly reviewed in this section. The expanded treatment in Phase II will incude analysis of possible variants in accident and post-accident scenarios.

Chemical

Service water systems are subject to a wide range of relatively impure, untreated waters (exception: the secondary side of closed systems). Dissolved oxygen, halides, carbon dioxide, ammonia, manganese dioxide, etc., provide aggressive combinations that contribute both to a range of corrosion mechanisms and/or to deposition, leading to fouling and plugging. As

indicated in another section of this appendix, a range of biological species (e.g., sulfur-reducing bacteria) contribute to the aggressive chemical environments in SWS.

Water flow varies from erosive to stagnant, contributing a range of variants on the aggressive nature of the environment. For example, steel corrosion increased by a factor of ~7 as sea water flow increased from 0 to 20 ft/s (0 to 6 m/s) (B.11).

Radiation

In normal operation, corrosion in SWSs is not influenced by radiation. Possible effects in accident or post-accident scenarios will be evaluated in Phase II but currently appear to be nil.

Atmospheric Corrosion

Intake structures and exterior surfaces of components and piping are subject to atmospheric corrosion. Moist areas and zones subject to wet/dry cycling are particularly subject to atmospheric attack. Dead-leg, air-bound locations are sometimes overlooked or difficult to inspect. A review of atmospheric corrosion includes materials found in SWSs (B.1). In general, the conditions on the wetted surfaces are expected to be more aggressive than on the surfaces in contact with air, but air-side corrosion needs to be considered in Phase II.

Underground Corrosion

Sections of SWS piping and intake structures are in contact with soils. As with wates, SWSs are subject to a wide range of soils, including site-to-site variations in pH, composition, moisture content, etc. Therefore, the acceptable life of materials in contact with soils will vary from site to site. The principal factors in soil corrosion are porosity (aeration), electrical conductivity, dissolved species (including polarizers and inhibitors), moisture, and acidity or alkalinity (B.11). Standard field tests have been conducted that provide a basis for predicting corrosion behavior for a range of materials in various soils (see Reference B.11, p. 153).

A systematic assessment of corrosion on buried piping at the Hanford N Reactor was conducted and reported on by Hurd (B.12). This report summarizes surveillance and maintenance practices. The underground piping system includes ~56,000 ft (17,070 m) of carbon steel pipe with diameters from 3 to 108 inches (7.5 to 270 cm).

The range of wall-thinning mechanisms from both the inside (water-side) and outside (soil-side) pipe surfaces were considered. The following observations illustrate selected considerations that were evaluated in the N Reactor buried piping study (B.11):

- Galvanic corrosion can develop from coupling different metals or from adding sections of replacement pipe in contact with older sections of the same material (new pipe tends to be anodic to the older passivated pipe).

- Holidays in protective coatings resulted in local pitting.

- A survey of corrosion by a range of river waters indicates up to a factor of five differences in steel corrosion rates at three U.S. river sites. However, even larger factors are possible (e.g., rates up to 40 mpy).

- Partially filled horizontal pipes transporting air-saturated water tend to pit at the apex above the water level and at the water-to-air interface.

- Intermittent flow of air-saturated water produced a particularly corrosive environment.

- Differential dissolved oxygen concentrations in soils (e.g., under paved roads versus open soil) produced local corrosion phenomena.

- Corrosion may occur at grounding connections in buried steel pipe with a galvanized central ground grid after the sacrificial zinc anode is consumed.

- Dissimilar soils (e.g., clay versus sand) can set up local corrosion cells.

CORROSION/FOULING PHENOMENA IN SWSs

Table B.2 illustrates the types of corrosion mechanisms that must be addressed in a comprehensive SWS corrosion assessment. Each is described in the following.

Uniform Corrosion

Wall thinning by uniform corrosion generally has been accounted for in the original design, though allowances are not always consistent with 40-y life. However, this mechanism generally does not result in serious problems except in specific areas such as unprotected pipe and water boxes. Cases of substantial uniform corrosion may result in secondary effects such as corrosion product transport and deposition, leading to plugging and localized corrosion under the deposits. Examples of corrosion rates are cited here but will be addressed for a broader range of materials and conditions in the Phase II assessment.

At ambient conditions, steel corrosion in sea water varies from 0.001 to 0.008 inches per year (ipy) or 25 to 200 um per y (B.11). Steel corrosion, as a maximum, would be expected to double for each 10°C (20°F) increase

(B.11). However, decreases in oxygen concentration and calcareous deposits may mitigate the corrosive attack as temperature increases.

Corrosion caused by a variety of river waters has been assessed.

Test data indicate that the general corrosion rate for carbon steel exposed to untreated Columbia River water is approximately 3.6 mils/year. These data were obtained from the results of a corrosion monitoring program for carbon steel pipe at Hanford locations (B.10). Test data, reported for a six-m period, showed that the initial corrosion rate was approximately 0.66 mils/m: the uniform steady-state rate after six months was approximately 0.30 mils/m. The data also indicated that pitting corrosion was occurring.

Test data for three rivers located in the eastern United States were reported for an eight-y period by Coburn (B.12). The three rivers were the Allegheny, Monongahela, and Mississippi. The data showed that the general corrosion rate of carbon steel pipe exposed to Columbia and Allegheny River water was approximately equal. The general corrosion rate for exposure to Monogahela River water was twice that for exposure to the Columbia River water; the greater rate was attributed to ferric sulfate concentration from mine drainage which resulted in a pH range of 3.5 to 4.0. The general corrosion rate for exposure to Mississippi River water was less than for exposure to Columbia River water; the lower rate was attributable to the test method, not to the water mineral content. The data show that the initial corrosion rate for each test decreases to a uniform rate; the value for the Allegheny test was approximately 2.5 mils/y (~65 um/y).

A pipe wall wastage evaluation for a 20-yr-old, 6-in. Schedule-40 carbon steel pipe showed that leakage may be expected in approximately 15 more years (B.11). This estimate was based upon the Coburn data for the Alegheny River water test which was conducted at room temperature. The applied steady-state general corrosion rate was approximately 2.5 mils/y; the pitting corrosion rate was approximately 8 mils/yr (200 um/y). This case illustrates that some systems may not last for a full 40 y and, in fact, probably does not represent the most aggressive cases.

Phase II should consider the impact of corrosion on such factors as changes in internal pipe diameters, local chemical environments, and wall morphology.

Pitting Corrosion

Tuberculation and pitting are common corrosion mechanisms for carbon steel pipe exposed to natural water (B.10).

Pit and tubercule formation on carbon steel pipe at Hanford locations has been assessed. A tubercule is a concentration of corrosion product covering an anodic area where pit formation is progressing. Initially, the tubercule causes an increase in corrosion penetration rate; later the penetration rate decreases because the corrosion layer protects the pit.

However, the impenetrable corrosion layer may initiate an oxygen depletion corrosion mechanism which promotes the anodic tendency at the pit. A damaged tubercule is replaced by a layer of corrosion product and tubercule formation continues.

A pitting rate of 8 mils/y (200 um/y) was estimated for carbon steel pipe exposed to Columbia River water (B.10). In more aggressive waters, higher pitting rates are to be expected (to be characterized in Phase II).

Corrosion products such as ferric oxide occupy approximately four times the volume of the original metal (B.10). The corrosion products may cause flow restrictions where they develop or they may spill and/or dissolve and redeposit at other locations.

Scaling caused by depositable species such as carbonates is another major consideration in raw water systems. Various indices (e.g., the Langelier Saturation Index) provide a basis to predict the scaling behavior of waters (B.15). However, as in the case of the Langelier index, the application is relatively narrow, i.e., applying only to calcium carbonate.

INTERGRANULAR STRESS CORROSION CRACKING (IGSCC)

Stainless steels are being used to replace mild steel in smaller pipes and components in SWSs to improve corrosion resistance. In some areas, e.g., uniform corrosion and erosion-corrosion the benefit is clear. However, even at the relatively low temperatures characteristic of SWS, stainless steels are prone to IGSCC if attention is not given to proper alloy selection, metallurgical condition, and environmental control. For example, numerous IGSCC failures of 304 stainless steel components have occurred in spent fuel pools at less than 50°C (122°F) (B.13, B.14). Oxygenated, relatively impure waters are a given in SWSs, suggesting a need for increased attention to controllable factors that mitigate IGSCC in stainless steels. Choice of L grades is an obvious positive to improve IGSCC resistance. Other important considerations are selection of welding parameters and heat treatments to minimize sensitization, and elimination of high stresses. Investigations of IGSCC at low temperatures indicate effects of stress level and sensitization of 304 SS IGSCC (B.13, B.14). Materials that release and re-deposit relatively large amounts of corrosion products (e.g., carbon steel) may contribute to IGSCC resulting from adsorption and concentration of aggressive species in deposits on materials that are prone to IGSCC. It is worth noting that 300-series stainless steels are prong IGSCC while 400-series materials are largely immune.

Ammonia-induced cracking of copper-bearing alloys was mentioned earlier and must be considered in systems where ammonia is a significant species.

EROSION CORROSION

High flow rates at some locations in SWS, sometimes exacerbated by local flow perturbation, can lead to erosion corrosion. Carbon steels are particularly susceptible to erosive attack. Austenitic stainless steels are essentially immune (B.11). Addition of even 1% chromium can reduce erosive effects by an order of magnitude, but chromium contents of >2% are recommended. The most erosion-resistant copper alloys for sea water are the tine bronzes (tin contents of 5-10% for cast alloys; 12% for heat exchanger tubes) (B.11). For the brasses, resistance to erosion increases with zinc content. Addition of iron improves the erosion resistance of the Cu-Ni alloys.

BIOLOGICAL ATTACK

Service water systems are subject to a wide range of biological species, including microorganisms (bacteria) and macroorganisms such as mussels, clams and barnacles.

Surveillance and control of biological species have been rather ineffective at some power plants (B.7, B.8). Although mollusk control may be hampered by conflicting objectives (environmental versus biological controls), relatively effective new molluscicides are on the market. Measures to mitigate biological attack sometimes have been included in plant design. However, some cases of bivalve fouling have not been anticipated, due to invasions to locations where the species previously was unknown. Use of strainers and similar devices can aid in control of biofouling.

The reliability of open-cycle water systems can be improved by surveillance and control programs (B.7). Revision of plant technical specifications is an important aspect of effective biofouling control.

Strategies to control biofouling must take into account secondary effects. For example, wash-off of bivalves killed in a chlorination campaign may result in heat exchanger plugging (B.7). Secondary effects of biocides injected to control MIC must be considered. For example, denickelification of Cu-Ni alloys is a potential side effect of chlorination.

The occurrence of MIC in service water systems has been troublesome, particularly in stagnant or deadleg locations (B.4). Bacteria colonies attached to pipe walls develop nodules or tubercles, isolating the colony from the environment, rendering biocides largely ineffective. If the nodules are broken off without destroying the bacteria, a fresh influx of nutrients further augments the colony and the attendant corrosion. It is worth noting that current technology includes the use of wetting agents/surfactants for use in treating service water systems subject to MIC problems. Specifically, the surface active agents are added to the water containing biocidal treatments, attempting to penetrate biota which are growing in the Service Water System.

Materials considered to be corrosion-resistant are now recognized to be prone to MIC. For example, a carbon steel SWS component is replaced with Type 316 SS. Within six months the stainless steel had extensive MIC attack (B.7). Some nickel-base alloys show evidence of resistance to MIC.

Bacterial corrosion is pervasive and can occur in local areas throughout a system. It sometimes has features similar to other corrosion mechanisms, so a systematic root cause analysis is often required to differentiate MIC from other types of corrosion.

The importance of biological fouling to the safety of SWSs is addressed in IE Bulletin No. 81-03 (B.8) and Generic Issue 51 (B.9).

FOULING

Fouling refers to all deposits on system surfaces that increase resistance to fluid flow and/or heat transfer. Sources of fouling include the following:

- organic films of microorganisms and their products (microbial fouling)
- deposits of macroorganisms such as mussels (microbial fouling)
- inorganic deposites, including scales, silt, corrosion products and detritus.

Scales result when solubility limits for a given species are exceeded. Deposits result when coolant-borne particles drop onto surfaces due to hydraulic factors.

The deposits result in reduced flow of cooling water, reduced heat transfer, and increased corrosion. Sediment deposits promote concentration cell corrosion and growth of sulfur-reducing bacteria (B.6). The bacteria can cause severe pitting after one month of service. Piping systems designed for 30 years have had their projected life reduced to five years due to undersediment corrosion.

Chlorination is the predominant method to control biofoulants, but federal discharge regulations limit the effectiveness of this approach (B.6). Bromine is another biocide used in service water systems but is similarly limited. Other methods include backflushing, organic coating, or thermal shock (B.10). Chemical and mechanical cleaning methods are applied periodically in some systems to remove the fouling materials. The relatively large SWS size imposes a need to focus antifouling procedures on areas that have the most significance to plant safety and efficiency.

MANAGING EFFECTS OF SWS CORROSION AND FOULING

Understanding Corrosion and Fouling Processes and Their Safety Impacts

The relatively aggressive conditions in SWSs result in several types of corrosion and fouling phenomena, outlined in prior sections. In most cases, the mechanisms are recognized. Some types of corrosion were anticipated in plant designs; some, such as MIC, were not. Some root cause analyses of component failures point clearly to corrosion; in other cases the cause was less obvious, with corrosion as a suspected factor. Phase II of this study will focus in more detail on corrosion and faulting as important elements in the aging of SWSs. Potential effects on plant safety will be addressed here.

Corrosion Detection and Monitoring Methods

Currently, corrosion is discovered by leaks, reduced flow surveillances, or inspections. Coupons are used to monitor heat exchanger corrosion on SWS heat exchangers. However, it seems that the coupon monitoring serves as an indicator of current condition rather than as a tool to obtain corrosion rates for predicting the life of the heat exchanger. Coupons are not used generally elsewhere in the service water system. Pipe wall thickness is periodically measured ultrasonically. Typically, the amount of wall thinning is within an acceptable range, but corrosion product and silt buildup are sources of uncertainty in the measurements. Reduced flow area from material buildup and pinhole leaks are not detected by either the coupon or the ultrasonic wall thickness measurements. Wall thickness measurements would be best performed after pipe cleaning.

Reference B.12 summarizes methods used to assess and monitor corrosion in carbon steel piping systems. Methods include deposit monitors, corrosion coupons, bypass pipes, spool pieces, corrosion rate meters, and pitting meters.

Trending of Corrosion and Fouling in SWSs

Trending of corrosion parameters and the magnitudes of corrosion on key locations and components in SWS appears to be an area where substantial improvements would yield valuable benefits, both to the assurance of system integrity and to the economic operation of the system. Phase II will include a summary of current trending practices, with recommendations for improvements.

MAINTENANCE/REFURBISHMENT/REPLACEMENT

Numerous considerations are obvious in these areas:

- timely painting of exposed structures
- replacement of sacrificial anodes in cathodic protection systems

- proper attention to materials selection in components prone to failure
- coating application and repair
- chemical and/or mechanical cleaning
- water treatment.

REFERENCES

B.1. Johnson, Jr., A. B., D. R. Pratt, and G. E. Zima. 1976. Survey of Materials Performance in Dry Cooling Applications. BNWL-1958.

B.2. "Failure Cause Analysis - Condenser and Associated Systems." 1982. Electric Power Research Institute, Inc., Palo Alto, California, Research Project 1689-2.

B.3. Hayner, G. O., D. H. Pope, and B. E. Crane. 1987. "Microbiologically Influenced Corrosion in Condenser Water Boxes at Crystal River-3." Paper presented at the Third International Symposium on Environmental Degradation of Materials in Nuclear Power Systems -- Water Reactors, August 30 to September 3, 1987, Traverse City, Michigan.

B.4. Stein, A. A. 1987. "Microbiologically Induced Corrosion." Paper presented at the Third International Symposium on Environmental Degradation of Materials in Nuclear Power Systems -- Water Reactors, August 30 to September 3, 1987, Traverse City, Michigan.

B.5. "Biofouling Control Assessment - A Preliminary Data Base." 1982. Electric Power Research Institute, Inc., Palo Alto, California, Contract TPS 80-739.

B.6. Johnson, K. I., and D. A. Neitzel. 1987. Improving the Reliability of Open-Cycle Water Systems. PNL-5876, Vol. 1, Pacific Northwest Laboratory, Richland, Washington.

B.7. Neitzel, D. A., K. I. Johnson, and P. M. Daling. 1986. Improving the Reliability of Open-Cycle Water Systems. PNL-5876, Vol. 1, Pacific Northwest Laboratory, Richland, Washington.

B.8. U.S. NRC; I&E Bulletin No. 81-03, Flow Blockage of Cooling Water to Safety System Components by CORBICULA SP. (ASIATIC CLAM) and MYTILUS SP. (MUSSEL), July 1981.

B.9. "A Prioritization of Generic Safety Issues." December 1984. Generic Issue 51 Proposed Requirements for Improving the Reliability of Open Cycle Service Water Systems. NUREG/CR-0933, U.S. Nuclear Regulatory Commission, Washington, D.C.

B.10. Daling, P. M., and K. I. Johnson. 1985. Bivalve Fouling of Nuclear

Power Plant Service-Water Systems. PNL-5300, Vol. 2, Pacific Northwest Laboratory, Richland, Washington.

B.11. Henager, C. H., P. M. Daling, and K. I. Johnson. 1985. Bivalve Fouling of Nuclear Power Plant Service-Water Systems. PNL-5300, Vol. 3, Pacific Northwest Laboratory, Richland, Washington.

B.12. Hanford Engineering Development Laboratory. 1985. N Reactor Production Assurance Program Balance of Plant Evaluation. UNI-3133, Rev. 1, Vol. 1, Compiled by E. N. Hurd, UNC Nuclear Industries, Richland, Washington.

B.13. The Electrochemical Society, Inc. 1986. The Corrosion Handbook. Edited by H. H. Uhlig, Massachusetts Institute of Technology, Cambridge, Massachusetts.

B.14. Coburn, S. K. 1965. Corrosion in Fresh Water. ASTM Metals Handbook, Vol. 1, 9th Edition.

B.15. Jones, R. H., A. B. Johnson, Jr., and S. M. Bruemmer. 1982. "Evaluation of Stress Corrosion Cracking of Sensitized 304SS in Low Temperature Borated Water." In Proceedings of the 2nd International Conference on Environmental Degradation of Engineering Materials, Blacksburg, Virginia, September 1981.

B.16. Bruemmer, S. M., and A. B. Johnson, Jr. 1983. Effect of Chloride Thiosulfate, and Fouride Additions on the IGSCC Resistance of Type 304 Stainless Steel in Low Temperature Water. Presented at the International Symposium on Environmental Degradation of Materials in Nuclear Power Systems--Water Reactors, Myrtle Beach, South Carolina, August 22-25, 1983.

B.17. Uhlig, H. H. 1967. Corrosion and Corrosion Control. Published by John Wiley & Sons, Inc., New York, New York.

DISTRIBUTION

No. of Copies	OFFSITE
	J. J. Burns (5) U. S. Nuclear Regulatory Commission 5650 Nickolson Lane Rockville, MD 20852

No. of Copies	ONSITE Pacific Northwest Laboratory
	D. B. Jarrell (10) Publishing Coordination Technical Report Files (5)

NRC FORM 335 (2-84) NRCM 1102, 3201, 3202

U.S. NUCLEAR REGULATORY COMMISSION

BIBLIOGRAPHIC DATA SHEET

SEE INSTRUCTIONS ON THE REVERSE

1. REPORT NUMBER (Assigned by TIDC, add Vol. No., if any)
NUREG/CR-5379
PNL-6560
Vol. 1

2. TITLE AND SUBTITLE
Nuclear Plant Service Water System Aging Degradation Assessment
Phase I

3. LEAVE BLANK

4. DATE REPORT COMPLETED
MONTH: May YEAR: 1989

5. AUTHOR(S)
D.B. Jarrell, A.B. Johnson, Jr., P.W. Zimmerman, M.L. Gore

6. DATE REPORT ISSUED
MONTH: June YEAR: 1989

7. PERFORMING ORGANIZATION NAME AND MAILING ADDRESS (Include Zip Code)
Pacific Northwest Laboratory
Richland, WA 99352

8. PROJECT/TASK/WORK UNIT NUMBER

9. FIN OR GRANT NUMBER
NRC FIN B29119

10. SPONSORING ORGANIZATION NAME AND MAILING ADDRESS (Include Zip Code)
Division of Engineering
Office of Nuclear Regulatory Research
U.S. Nuclear Regulatory Commission
Washington, DC 20555

11a. TYPE OF REPORT

b. PERIOD COVERED (Inclusive dates)

12. SUPPLEMENTARY NOTES

13. ABSTRACT (200 words or less)

Phase I of an aging assessment of nuclear power plant service water systems, was performed by the Pacific Northwest Laboratory in support of the U.S. Nuclear Regulatory Commission Nuclear Plant Aging Research program. The service water system was selected for study because of its essential role in the mitigation of and recovery from accident scenarios involving the potential for core melt. The objectives of the Service Water System (SWS) task are to identify and characterize the principal aging degradation mechanisms relevant to this system, to assess their impact on operational readiness, and to provide a methodology for the mitigation of aging on the service water aspect of nuclear plant safety. The first two of these objectives are covered in this Phase I report.

A review of available literature and data base information indicated that motor operated valve torque switches (an electro-mechanical device) were the prime suspect in component service water system failures. More extensive and detailed data, however, obtained from cooperating utility maintenance records and personnel accounts, contradicted this conclusion indicating that organic accumulation and corrosive attack of wetted component surfaces were, in fact, the primary degradation mechanisms.

14. DOCUMENT ANALYSIS – a. KEYWORDS/DESCRIPTORS
Service Water System, Safety Components, Aging Degradation, Maintennace, Nuclear Plant Aging Research, Root Cause Analysis

b. IDENTIFIERS/OPEN-ENDED TERMS

15. AVAILABILITY STATEMENT
Unlimited

16. SECURITY CLASSIFICATION
(This page)
Unclassified
(This report)
Unclassified

17. NUMBER OF PAGES

18. PRICE

*U.S. GOVERNMENT PRINTING OFFICE:1989-241-590:00111

UNITED STATES
NUCLEAR REGULATORY COMMISSION
WASHINGTON, D.C. 20555

OFFICIAL BUSINESS
PENALTY FOR PRIVATE USE, $300

SPECIAL FOURTH-CLASS RATE
POSTAGE & FEES PAID
USNRC

PERMIT No. G-67

NUREG/CR-5379, Vol. 1

NUCLEAR PLANT SERVICE WATER SYSTEM AGING DEGRADATION ASSESSMENT

JUNE 1989