NUREG/CR-6048
ORNL-TM-12371

Pressurized-Water Reactor Internals Aging Degradation Study

Phase I

Prepared by
K. H. Luk

Oak Ridge National Laboratory

Prepared for
U.S. Nuclear Regulatory Commission

AVAILABILITY NOTICE

Availability of Reference Materials Cited in NRC Publications

Most documents cited in NRC publications will be available from one of the following sources:

1. The NRC Public Document Room, 2120 L Street, NW, Lower Level, Washington, DC 20555-0001

2. The Superintendent of Documents, U.S. Government Printing Office, Mail Stop SSOP, Washington, DC 20402-9328

3. The National Technical Information Service, Springfield, VA 22161

Although the listing that follows represents the majority of documents cited in NRC publications, it is not intended to be exhaustive.

Referenced documents available for inspection and copying for a fee from the NRC Public Document Room include NRC correspondence and internal NRC memoranda; NRC Office of Inspection and Enforcement bulletins, circulars, information notices, inspection and investigation notices; Licensee Event Reports; vendor reports and correspondence; Commission papers; and applicant and licensee documents and correspondence.

The following documents in the NUREG series are available for purchase from the GPO Sales Program: formal NRC staff and contractor reports, NRC-sponsored conference proceedings, and NRC booklets and brochures. Also available are Regulatory Guides, NRC regulations in the *Code of Federal Regulations*, and *Nuclear Regulatory Commission Issuances*.

Documents available from the National Technical Information Service include NUREG series reports and technical reports prepared by other federal agencies and reports prepared by the Atomic Energy Commission, forerunner agency to the Nuclear Regulatory Commission.

Documents available from public and special technical libraries include all open literature items, such as books, journal and periodical articles, and transactions. *Federal Register* notices, federal and state legislation, and congressional reports can usually be obtained from these libraries.

Documents such as theses, dissertations, foreign reports and translations, and non-NRC conference proceedings are available for purchase from the organization sponsoring the publication cited.

Single copies of NRC draft reports are available free, to the extent of supply, upon written request to the Office of Information Resources Management, Distribution Section, U.S. Nuclear Regulatory Commission, Washington, DC 20555-0001.

Copies of industry codes and standards used in a substantive manner in the NRC regulatory process are maintained at the NRC Library, 7920 Norfolk Avenue, Bethesda, Maryland, and are available there for reference use by the public. Codes and standards are usually copyrighted and may be purchased from the originating organization or, if they are American National Standards, from the American National Standards Institute, 1430 Broadway, New York, NY 10018.

DISCLAIMER NOTICE

This report was prepared as an account of work sponsored by an agency of the United States Government. Neither the United States Government nor any agency thereof, or any of their employees, makes any warranty, expressed or implied, or assumes any legal liability of responsibility for any third party's use, or the results of such use, of any information, apparatus, product or process disclosed in this report, or represents that its use by such third party would not infringe privately owned rights.

NUREG/CR-6048
ORNL-TM-12371
RV

Pressurized-Water Reactor Internals Aging Degradation Study

Phase I

Manuscript Completed: August 1993
Date Published: September 1993

Prepared by
K. H. Luk

Oak Ridge National Laboratory
Operated by
Martin Marietta Energy Systems, Inc.

Oak Ridge National Laboratory
Oak Ridge, TN 37831-6285

Prepared for
Division of Engineering
Office of Nuclear Regulatory Research
U.S. Nuclear Regulatory Commission
Washington, DC 20555-0001
NRC FIN B0828
Under Contract No. DE-AC05-84OR21400

Abstract

This report is a summary of the results of a Phase 1 study on the effects of aging degradations in pressurized-water reactor (PWR) internal components. Westinghouse (WE), Combustion Engineering (CE), and Babcock & Wilcox (B&W) reactors are included in the study.

Stressors associated with the operating environment inside the reactor pressure vessel provide conditions that are favorable to the development of aging-related degradation mechanisms. The dominant stressor is flow-induced oscillatory hydrodynamic forces generated by the reactor primary coolant flow. Results of a survey of the component failure information identified three major aging-related degradation mechanisms: fatigue, stress corrosion cracking, and mechanical wear.

Strategies for controlling and managing aging degradations are formulated based on the understanding of the linkage between stressors and aging degradation mechanisms. Flow-induced vibration problems are resolved by conventional engineering practices: by the elimination of excitation sources or by de-tuning the structure from input excitations. Uncertainties remaining in the assessment of aging effects on PWR internals include long-term neutron irradiation effects and the influence of environmental factors on high-cycle fatigue failures.

An effective plant in-service inspection (ISI) program will ensure the structural integrity of reactor internals. Reactor internals can be replaced if it is deemed necessary. Therefore, an inspection method with early failure detection capability will further enhance the safety as well as the efficiency of plant operations.

Contents

	Page
Abstract	iii
List of Figures	vii
List of Tables	ix
Acknowledgments	xi
Summary	xiii
1 Introduction	1
Reference	2
2 PWR Internal Components	3
2.1 Westinghouse (WE) Internals	3
2.2 Babcox & Wilcox (B&W) Internals	11
2.3 Combustion Engineering (CE) Internals	16
Reference	22
3 Primary Stressors	25
3.1 Applied Loads	25
3.2 Environmental Stressors	25
3.3 Manufacturing Stressors	26
References	27
4 Aging-Related Degradation Mechanisms	29
4.1 Corrosion	29
4.2 Fatigue	31
4.3 Erosion	32
4.4 Mechanical Wear	32
4.5 Embrittlement	32
4.6 Creep and Stress Relaxation	33
4.7 PWR Internals and Potential Aging-Degradation Mechanisms	34
References	35
5 Survey of Aging-Related Failures	37
5.1 ISI Program for Reactor Internals	37
5.2 Failure Information Summary	37
5.3 Failure Information Survey Results	43
References	45
6 ISI and Monitoring Programs	47
6.1 LPMS	47

6.2 Vibration Monitoring and Trending Studies 48
References 49

7 Discussion and Conclusions 51
7.1 FIV 51
7.2 SCC 52
7.3 Other Potential Aging-Related Degradation Mechanisms 52

List of Figures

Figure		Page
2.1	Westinghouse PWR internals	4
2.2	Westinghouse PWR lower core support structure	5
2.3	Westinghouse PWR core barrel cross sections	6
2.4	Westinghouse PWR radial key-keyway system	7
2.5	Westinghouse PWR thermal shield flexure support system	7
2.6	Westinghouse PWR secondary core support assembly	8
2.7	Westinghouse PWR upper core support structure	9
2.8	Westinghouse PWR thimble and guide tube	11
2.9	B&W PWR internals	12
2.10	B&W PWR thermal shield lower support	14
2.11	B&W PWR internal vent valve	15
2.12	CE PWR internals	17
2.13	CE PWR core support assembly	18
2.14	CE PWR core support barrel	19
2.15	CE PWR core support snubber assembly	20
2.16	CE PWR upper grid assembly	21
2.17	CE PWR in-core instrumentation support structure	23
5.1	Westinghouse PWR downward bypass flow scheme	39
5.2	Westinghouse PWR baffle water-jet impingement patterns	40
5.3	Westinghouse PWR guide tube support pins	41
5.4	KWU-built PWR core baffle and bolting scheme	42
5.5	KWU-built PWR core baffle bolt failures	42

List of Tables

Table		Page
4.1	PWR internals primary stressors and aging-related degradation mechanisms	35
5.1	Summary of WE internals failure information	44
5.2	Summary of B&W internals failure information	45
5.3	Summary of CE internals failure information	45

Acknowledgments

The guidance and direction provided by D. A. Casada, W. S. Farmer, and R. D. Cheverton in the conduct of this study are greatly appreciated.

The author also wishes to thank A. E. Cross and W. P. Poore III for their help in obtaining the component failure data for PWR internals.

The assistance of C. C. Southmayd and E. W. Carver in preparing this report is gratefully acknowledged.

Summary

Reactor internals operate in the environment inside the pressure vessel; this is favorable to the development of time-dependent or aging degradations. The main objective of this study is to assess the effects of aging degradations on pressurized-water reactor (PWR) internal components. The assessment includes an evaluation of the effectiveness of the plant in-service inspection (ISI) program in detecting failures in internals before they can affect the safety and efficiency of plant operations. Westinghouse (WE), Combustion Engineering (CE), and Babcock & Wilcox (B&W) reactors are included in the study.

Reactor internals selected for the study serve three basic functions: they support the core; they provide housings for control rods, control rod drive mechanisms, and in-core monitors; and they direct and guide the reactor coolant flow through the reactor vessel. Most internals are made of type 304 stainless steel. Although they are located inside the reactor vessel, fuel assemblies, control rods, control rod drive mechanisms, and in-core monitors are not included as internals in the present study.

Stressors are conditions that can initiate and sustain the growth of aging-related degradation mechanisms. Reactor internals are subjected to stressors generated by applied loadings (thermal and mechanical), by contacts with high-temperature flowing water, and by exposures to high-energy ($E > 1$ MeV) neutron fluxes. The applied loadings of primary concern are flow-induced oscillatory hydrodynamic forces because they can excite structural components into vibrations. The reactor cooling water provides an environment that may contain conditions that are considered as favorable to the development of stress corrosion cracking (SCC). Neutron irradiation effects are important stressors to internal components located in close proximity of the core. Manufacturing processes may also impose stressors on internals.

Aging-related degradation mechanisms generally associated with the primary stressors for reactor internals are corrosion (including SCC), fatigue, mechanical wear, erosion, embrittlement, creep, and stress relaxation. These degradation mechanisms may develop at different rates, and as a result they are not of equal importance in the design life expectancy of the reactor. However, aging degradations, if they are not mitigated, will eventually lead to a failure in the affected component. Reported failure information and laboratory testing results can identify the more significant aging-related degradation mechanisms. SCC, fatigue, and mechanical wear are the major aging-related degradation mechanisms for PWR internals.

Major reported failure cases for PWR internals include bolting failures in core support structures caused by fatigue and SCC, fuel assembly damages caused by high-speed leakage flows through enlarged gaps in core baffle plates, excessive thinning of flux thimble guide tubes caused by flow-induced vibrations, and crevice-assisted SCC in control rod guide tube support pins. Some of these failures have resulted in extended outages for repair work, but currently available information did not indicate that they have compromised the safety-related functions of reactor internals.

The plant in-service inspection (ISI) program calls for the visual inspection of accessible areas of reactor internals during refueling outages. Limitations of the visual inspection method are well known. Reactors licensed since 1978 are equipped with loose parts monitoring systems (LPMSs). The main objective of the LPMS is to alert plant operators that loose parts are present in the reactor primary system so that appropriate actions can be taken to limit further damages to other reactor components and systems. New technologies have been developed, and they have the capability of early failure detection in key core-support internal components. They involve the use of neutron noise vibration measurements and trending studies. These practices, while common in France and Germany, have not been formally incorporated into the ISI program for U.S. nuclear plants. They have been used on a voluntary basis. Visual inspection, supplemented by ultrasonic and eddy-current inspection methods, remain the major tools for inspecting reactor internals in the U.S.

Most flow-induced vibration and SCC problems have been resolved by conventional engineering practices such as elimination of excitation sources, detuning the structure from external excitations, design changes, and use of materials that will make the components less susceptible to corrosion attacks.

Small-amplitude flow-induced vibrations in reactor internals are difficult to eliminate, and high-cycle fatigue remains as an active degradation mechanism. Internals close to the core are exposed to high-energy neutron fluxes and neutron irradiation effects, and related degradation mechanisms may become more prominent in the remaining life of the reactor. Thermal aging in cast austenitic stainless steel (CASS) internal components is in the same category. In the presence of active aging degradations, a vigilant inspection program is needed to ensure the structural integrity of reactor internals. The incorporation of an effective early failure detection method will further enhance the safety and efficiency of plant operations.

1 Introduction

Systems, structures, and components of a commercial nuclear power plant are subjected to time-dependent or aging degradations during operations. Effects of aging degradations, if they are not mitigated, will eventually lead to failures that could adversely affect plant safety and performance. The Office of Nuclear Regulatory Research (RES) has established the Nuclear Plant Aging Research (NPAR) Program[1] to increase basic understanding of aging-related degradations and their effects on reactor systems, structures, and components. The NPAR approach is to perform in-depth studies on selected reactor systems, structures, and components that are judged to be vulnerable to aging degradations. Understanding the interrelationship between stressors and aging-related degradation mechanisms is also the basis for the formulation of strategies for controlling and managing aging effects. One of the reactor systems selected for aging study is reactor internals, and the study is assigned to the Oak Ridge National Laboratory (ORNL). The effects of aging on boiling-water reactor (BWR) internals has been addressed in a previous report.* This report will concentrate on the aging assessment of pressurized-water reactor (PWR) internals. Operating histories of Babcock & Wilcox (B&W), Combustion Engineering (CE), and Westinghouse (WE) reactors provide the majority of the information for the aging assessment process. Westinghouse has licensed its PWR technology to European and Japanese vendors, and appropriate aging-related failure information of overseas reactors will also be included in the study.

The term "internal" is generally applied to reactor components that are located inside the reactor pressure vessel. Fuel assemblies, control rods, control rod drive mechanisms, and in-core monitoring equipment are routinely replaced and are excluded from this study. Housings for these components are considered as internal components. Reactor internals perform many functions; the primary one is to provide structural support and orientation to the core and control rod assemblies (CRAs). Other internal components direct and guide the coolant flow through the core region and provide shielding to the pressure vessel wall.

At the present time there are 73 PWRs licensed for commercial operation in the United States. Using the commercial operation starting date as the reference for counting reactor ages, 6 reactors or about 8% of the total are over 20 years old; 42 reactors or 58% are between 10 and 20 years old, and 25 reactors or 34% are less than 10 years old. There is a total of 907 reactor-years of PWR operations, and the accumulated operating histories of these reactors provide the information for studying aging effects in selected reactor components. The plant ISI Program is the major source of information on aging-related failure for reactor systems.

The aging assessment is performed in a multiple-step process. The first step is the identification and description of reactor internal components included in the study. The second step is to identify stressors that are presented in the operating environment inside the pressure vessel. The third step is to establish linkage between stressors and aging-related degradation mechanisms. The final step is the identification of the more significant aging-related degradation mechanisms based on a review of the operating histories of PWRs and reported component failure information. The establishment of the proper linkage between an aging-related degradation mechanism and the associated stressors can be used as the basis for formulating strategies for controlling and managing aging effects.

Selected reactor internals are identified in Chap. 2 of the report. The information provided in Chap. 2 includes a brief description of each selected component, the functions it performs, and the material of construction. Primary stressors inside the reactor pressure vessel are discussed in Chap. 3. Stressors generated by applied loads, environmental conditions, and manufacturing processes are included in the discussion. Chapter 4 identifies aging-related degradation mechanisms associated with the primary stressors. Potential aging degradation mechanisms include corrosion (including SCC), fatigue, mechanical wear, erosion, embrittlement (thermal and radiation induced), creep, and stress relaxation. Chapter 5 is a summary of the more significant reported aging-related failures of PWR internals. It includes discussions in the thermal shield support bolt failures in B&W, CE, and WE reactors; baffle plate water-jetting problems in WE units; WE control rod guide tube split pins failures; and flux thimble tube thinning problems. The core baffle bolt failures in Kraftwerk Union (KWU)-built PWRs of the WE design are also included in Chap. 5. The reported aging-related failure information identifies three major aging-related degradation mechanisms: fatigue, SCC, and mechanical wear.

This study also addresses issues concerning the inspection and maintenance methods used to control and manage aging effects in reactor internals. The effectiveness of the visual inspection method is discussed in Chap. 6 of the report, which also provides information on the development of new technologies in these areas, such as loose-part monitoring, neutron noise vibration measurements, and

*K. H. Luk, "Boiling Water Reactor Internals Aging Degradation Study—A Phase 1 Report," USNRC Report NUREG/CR-5754 (ORNL/TM-11876), to be published.

trending studies. Chapter 7 is a summary of important results in this Phase 1 aging assessment of PWR internals.

Reference

1. J. P. Vora, *Nuclear Plant Aging Research (NPAR) Program Plans*, USNRC Report NUREG-1144, Rev. 1, September 1987.*

*Available for purchase from National Technical Information Service, Springfield, VA 22161.

2 PWR Internal Components

Three domestic PWR vendors in the United States are the Westinghouse Electric Corporation (WE), the Combustion Engineering Company (CE), and the Babcock & Wilcox Company (B&W). Of the 73 domestic PWRs in commercial operation, 51 or about 70% of the total are WE, 15 (20%) are CE, and 7 (10%) are B&W reactors. The three reactor designs share some common features, but the internals are sufficiently different that using "generic" components for aging studies is not feasible. The three reactor internal systems will be treated separately.

The primary function of reactor internals is to provide structural supports to the core and to properly position CRAs under normal and accident operating conditions. Reactor internals that perform such functions are components of the core support system. Other internal components direct and guide the coolant flow through the core region and help to generate a uniform flow distribution to enhance core heat transfer. A third type of core internals is designed to provide gamma and neutron shielding to the reactor pressure vessel. Housings for in-core instrumentations are also considered as reactor internals. Even though they are also located inside the reactor vessel, aging effects in fuel assemblies, control rods, control rod drive mechanisms, and in-core monitors are not addressed in this study.

The majority of reactor internals are made of type 304 stainless steel. Unless it is specifically stated, it can be assumed that the material of construction for an internal component is type 304 stainless steel. Reactor internals are designed in accordance with the requirements of Sect. III of the *American Society of Mechanical Engineers (ASME) Boiler and Pressure Vessel (B&PV) Code.*[1] For reactors that were designed and built before the establishment of Sect. III of the *ASME B&PV Code*, analyses were performed to ensure that calculated stress values for reactor components met the intent of the Code under specified design conditions.

Information on internal components is obtained from various plant Final Safety Analysis Reports (FSARs) and technical reports published by the Electric Power Research Institute (EPRI). The components included in the study are those for a "typical" reactor made by the vendors. Reactor design is an evolving process, and many design features are plant specific. The report will attempt to identify major design changes in internal components, but no attempt will be made to account for all design changes. Reactor internals are identified by their names commonly used in plant FSARs. They may be referred to by different names in other reports, and confusions can be avoided by referring to the detailed descriptions of the component in question.

2.1 Westinghouse (WE) Internals

WE PWR internals are divided into three structural units: the lower core support structure, the upper core support structure, and the in-core instrumentation support structure. A simplified sketch of the arrangement of WE reactor internals is shown in Fig. 2.1.

2.1.1 Lower Core Support Structure

The lower core support structure is the principal core support structure. It consists of the core barrel, the core baffle, the lower core plate, the lower support columns, the bottom support plate, the intermediate diffuser plate, the thermal shield, and the secondary core support assembly. A sketch of the lower core support structure is shown in Fig. 2.2.

In addition to its core support functions, the lower core support structure also directs and guides the coolant flow through the core. The coolant enters the vessel through inlet nozzles and flows down the annular region between the core barrel and the vessel wall. The thermal shield, when it is used, is located in the annular region. The main coolant flow goes into a plenum at the bottom of the vessel where it is turned around and then flows up into the core through perforations of the bottom support plate, the diffuser plate, and the lower core plate. After passing through the core, the coolant enters the upper core barrel region occupied by the upper core support structure. The flow then turns radially outward and leaves the core barrel through outlet nozzles. The core barrel outlet nozzles direct the coolant flow into the pressure vessel outlet nozzles.

In addition to the main coolant flow described above, there are also secondary flows in the reactor coolant system. A small amount of cooling water is diverted into the region between the core baffle and the core barrel, and this bypass flow provides additional cooling to the core barrel. Coolant flow is also directed into the vessel head plenum for cooling purposes, and it exits through vessel outlet nozzles.

2.1.1.1 Core Barrel

The core barrel is the main structure of the core support system. Other core support structures are attached to the core barrel, which transmits the weight of the core to the reactor vessel. It is also used to position the fuel assemblies.

ORNL-DWG 93-2884 ETD

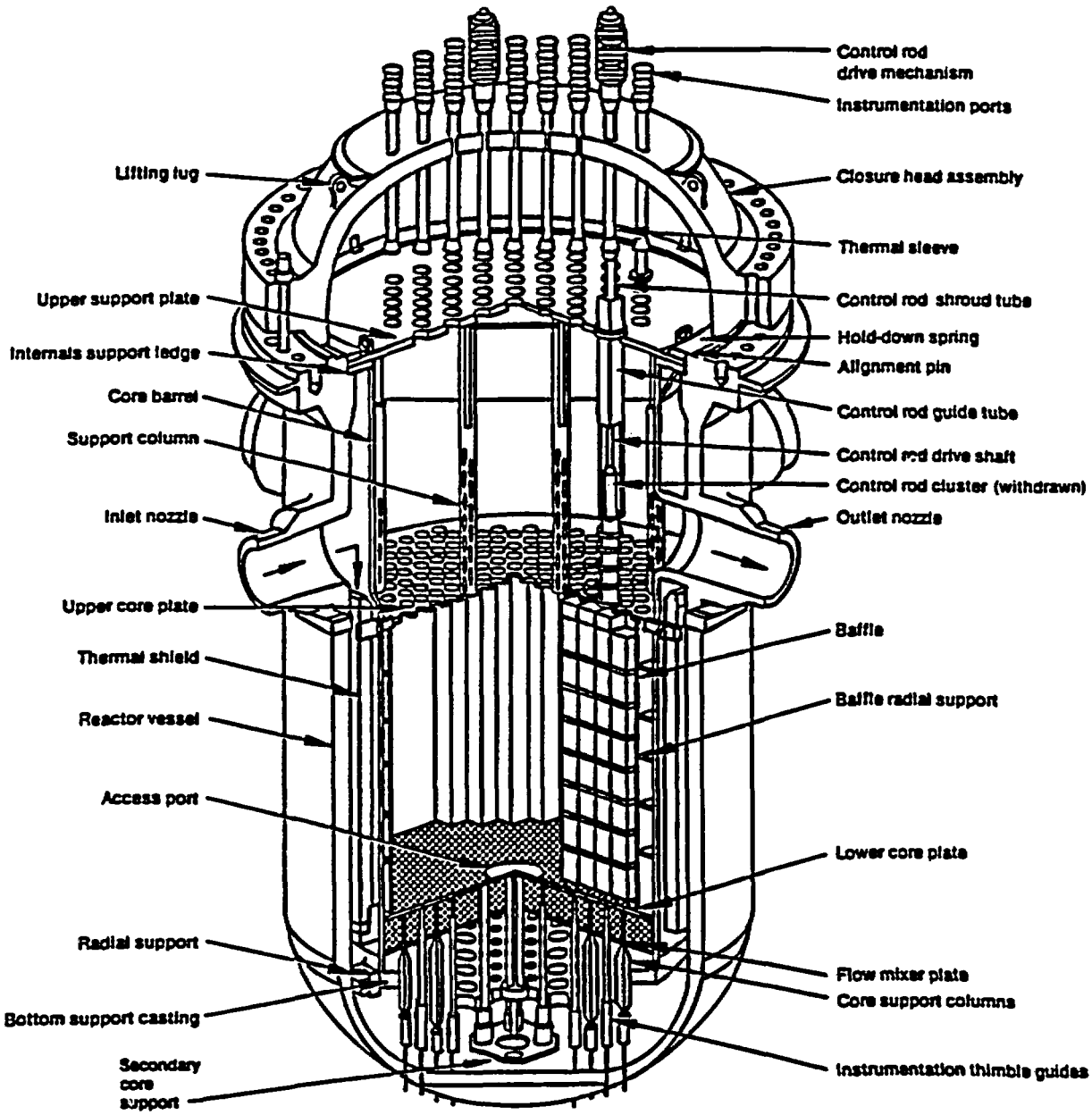

Figure 2.1 Westinghouse PWR internals

The barrel is a long, cylindrical, one-piece welded structure divided into an upper and a lower region. The upper flange of the core barrel rests on a ledge in the reactor vessel head flange, and the lower end of the barrel is welded to the bottom support plate, which in turn is restrained by a radial support system attached to the wall of the pressure vessel. The outlet nozzles are made by welding forged rings to openings in the upper part of the core barrel.

In some of the older WE reactors, the core barrel is a two-piece structure with the bottom of the core barrel connected to the bottom support plate by tie rods. The upper and lower barrel sections are connected by a bolted joint.

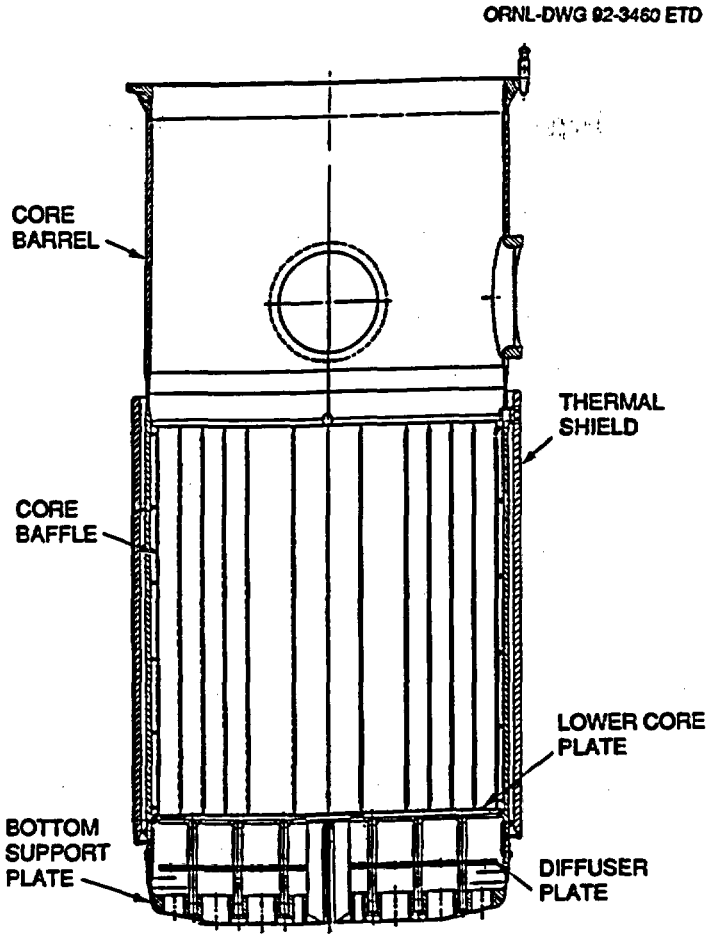

Figure 2.2 Westinghouse PWR lower core support structure

2.1.1.2 Core Baffle

The core baffle forms the boundary of the core, and it also directs and guides the coolant flow through the core region.

The core baffle is made of vertical baffle plates and horizontal former plates (also known as baffle radial support plates). The horizontal former plates are bolted to the inside surface of the lower part of the core barrel. The vertical plates are bolted to the inner edges of the horizontal plates, forming the boundary of the core. The bolts are made of type 316 stainless steel. Holes in the horizontal former plates provide a flow path for the bypass cooling flow in the region between the core barrel and the vertical baffle plates. A cross section of the core showing the core baffle and other components of the lower core support structure is shown in Fig. 2.3.

2.1.1.3 Lower Core Plate

The lower core plate positions the fuel assemblies and transmits their weights to the core barrel. This perforated plate is located at the bottom of the core below the core baffle assembly. The plate thickness is ~5.08 cm (2 in.). It rests on a ledge on the inside of the lower core barrel. The holes distribute the coolant flow to the core. Fuel assembly locating pins, two per assembly, are inserted into the lower core plate. They provide proper alignment as well as lateral support to the fuel assemblies.

2.1.1.4 Lower Support Columns

The weight of the fuel assemblies is ~113,276 kg (250,000 lb), and to prevent excessive deformations of the lower core plate, it is stiffened by the placement of short columns between the lower core plate and the bottom support plate (Fig. 2.2). The lower support columns are also referred to as the core support columns. The top ends of the columns are bolted to the under surface of the lower core plate. The bolts are made of type 316 stainless steel. The column lower ends are inserted into the bottom support plate. A major portion of the fuel assemblies' weight is then transmitted to the core barrel through the bottom support plate.

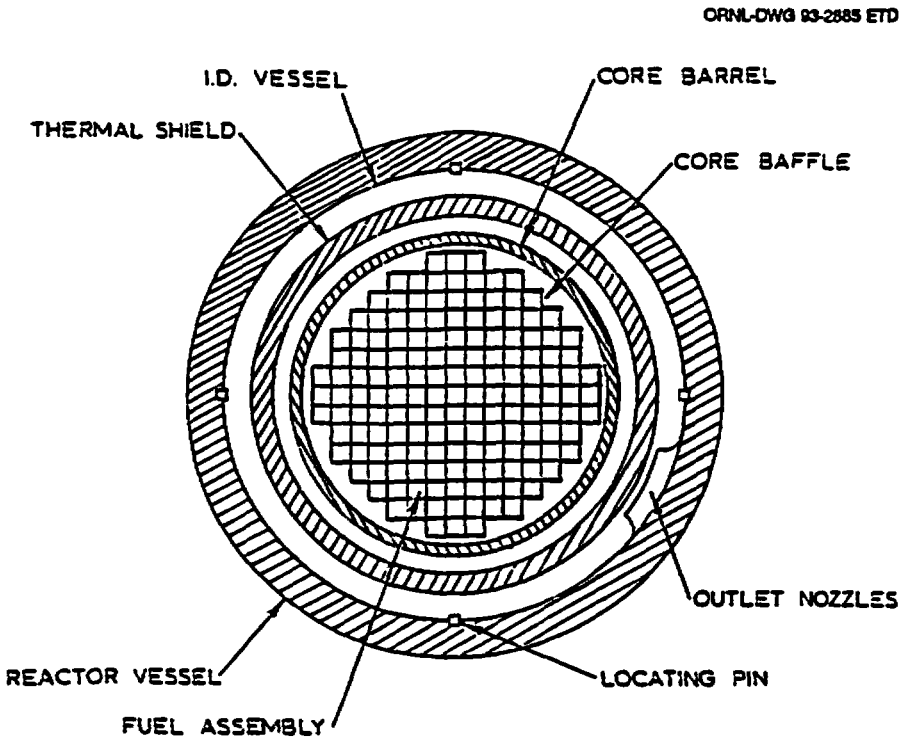

Figure 2.3 Westinghouse PWR core barrel cross sections

2.1.1.5 Bottom Support Plate

The bottom support plate supports the lower core plate through lower support columns. It transmits a major portion of the fuel assemblies weight to the bottom of the core barrel.

The bottom support plate, also known as the bottom disk, is a perforated plate welded to the lower end of the core barrel. Typical plate thickness is ~20.32 cm (8 in.). Lower ends of the core support columns are inserted into the bottom plate. Perforations in the plate distribute coolant flow to the core.

The bottom support plate is an integral part of the radial support system at the lower end of the core barrel. The support system consists of keys and keyways attached to the bottom support plate and the reactor vessel wall. Inconel clevis blocks are welded to the inside of the reactor vessel at six uniformly spaced locations around the circumference. Six Inconel insert blocks are bolted to these clevises and act as keyways. Six keys, also uniformly spaced, are welded to the outside surface of the bottom support plate. When the core barrel is lowered into the pressure vessel, the keys engage the keyways in the axial direction, and lateral motions of the core barrel lower end are restrained. A sketch of the radial key-keyway support system is shown in Fig. 2.4.

The bottom support plates in some of the older reactors are made of Grade CF-8 cast austenitic stainless steel. When they are casted, the bottom support plate is also referred to as the bottom support casting. The bottom support plates are also machined from type 304 stainless steel blocks.

2.1.1.6 Intermediate Diffuser Plate

The intermediate diffuser plate is a perforated plate located between the lower core plate and the bottom support plate. It is attached to the lower support columns. The intermediate diffuser plate, also called the flow mixer plate, generates a uniform coolant flow to the fuel assemblies. Not all WE units are equipped with intermediate diffuser plates. Perforations in the lower core plate and the bottom support plate are used to provide the uniform flow distribution when the diffuser plate is not used. Intermediate diffuser plates in some of the older reactors are made of Grade CF-8 cast austenitic stainless steel. Others are machined from type 304 stainless steel plates.

2.1.1.7 Thermal Shield

The thermal shield protects the reactor vessel wall from excessive gamma heating and radiation damages. It shields the vessel wall from fast neutron fluxes and gamma radiations. It is located in the annular region between the core barrel and the reactor vessel wall.

ORNL-DWG 93-2886 ETD

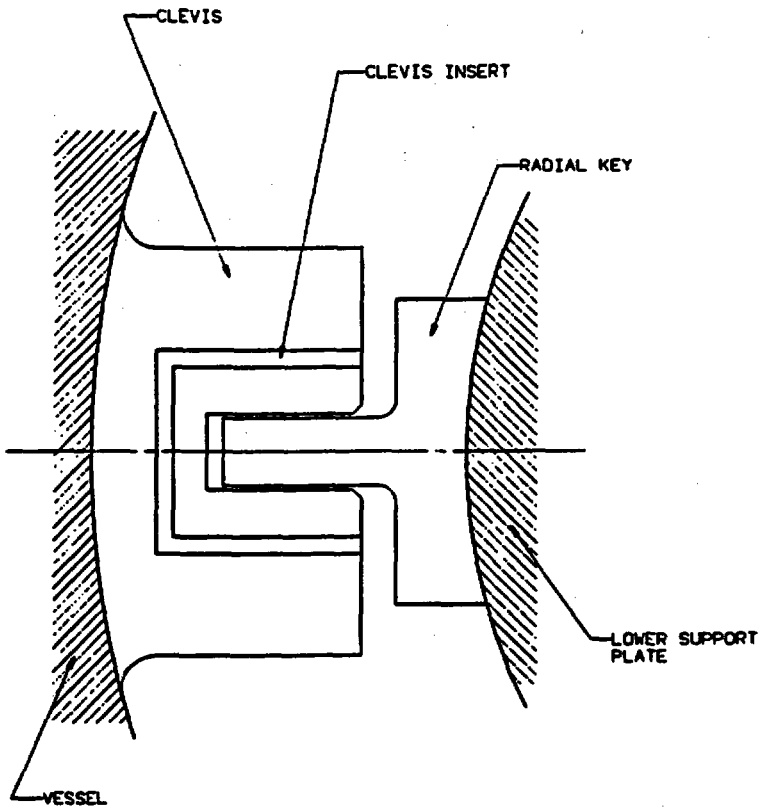

Figure 2.4 Westinghouse PWR radial key-keyway system

The early thermal shields are made of shell segments assembled inside the reactor vessel. The shell segments (typically three) were fastened together to form a cylindrical shell by the use of pins or bolts. The lower end of the shield was keyed to support lugs attached to the bottom of the vessel. The top end was free. One WE PWR was equipped with radial spacer pins at the top of the thermal shield.

The intermediate thermal shield design is a one-piece cylindrical structure and supported in one of two ways. In one support system, the shield is rigidly bolted to the lower edge of the core barrel, and a flexure support system is used at the top. The flexure support is basically a structural element with one end attached to the thermal shield and the other end bolted to the core barrel. Six flexure supports are spaced uniformly on the top of the shield. The flexure support system allows limited displacements at the top end of the shield. A top-mount flexure support system is shown in Fig. 2.5. Support conditions are reversed for the second type of shield support system; the top has a rigid support, and a flexure support system is used at the bottom edge. Material surveillance samples are inserted into surveillance specimen holder tubes that are bolted and pinned to the outside of the thermal shield.

ORNL-DWG 92-3327 ETD

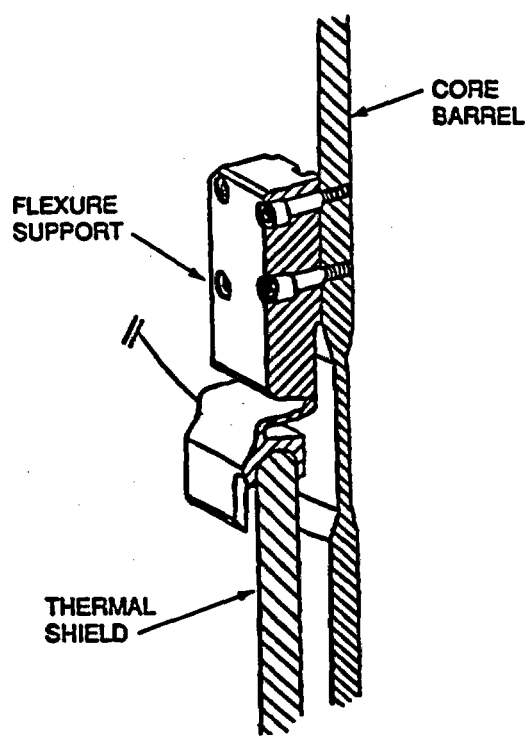

Figure 2.5 Westinghouse PWR thermal shield flexure support system

The latest thermal shield design uses shielding pads. Four shielding pads, also called neutron shield pads, are bolted and pinned to the outside of the core barrel. These pads are located in areas with high neutron fluence levels to offer the maximum protection to the reactor vessel wall. In this design, material surveillance samples are located in specimen holder tubes bolted to the outside of the neutron shield pads.

2.1.1.8 Secondary Core Support Assembly

The secondary core support assembly, often referred to as the core catcher, is an energy-absorbing device used to limit the vertical displacement of the core and to absorb some of the impact energy in the event of a catastrophic failure of the core support system. Figure 2.6 is a sketch of a typical secondary core support assembly. The number of energy absorbers required is plant specific, and it is determined by the condition that the maximum stress value in reactor internals (except in the absorbers) is below the yield stress of the material of construction for the affected component during a postulated core drop. Yield stress values can be found in Sect. III of the *ASME B&PV Code*.

The energy absorbers, cylindrical in shape, are attached to a base plate that is contoured to fit the bottom surface of the reactor vessel. The top ends of the absorbers are connected to columns that are bolted to the bottom support plate. In the event of a core support failure, the energy absorbers will limit the fall of the core as well as absorbing some of the kinetic energy of the dropped core assembly. This is accomplished through plastic deformations of a volume of stainless steel, initially loaded in tension, in the absorber. The plastic strain in the stainless steel piece is limited to ~15%, and then a positive stop is used to limit the fall and transmit the additional loads to the bottom of the reactor vessel.

2.1.2 Upper Core Support Structure

The upper core support structure is located in the upper region of the core barrel. The assembly consists of the top support plate, hold-down spring, deep beam sections, support columns, upper core plate, and guide tube assemblies.

ORNL-DWG 93-2887 ETD

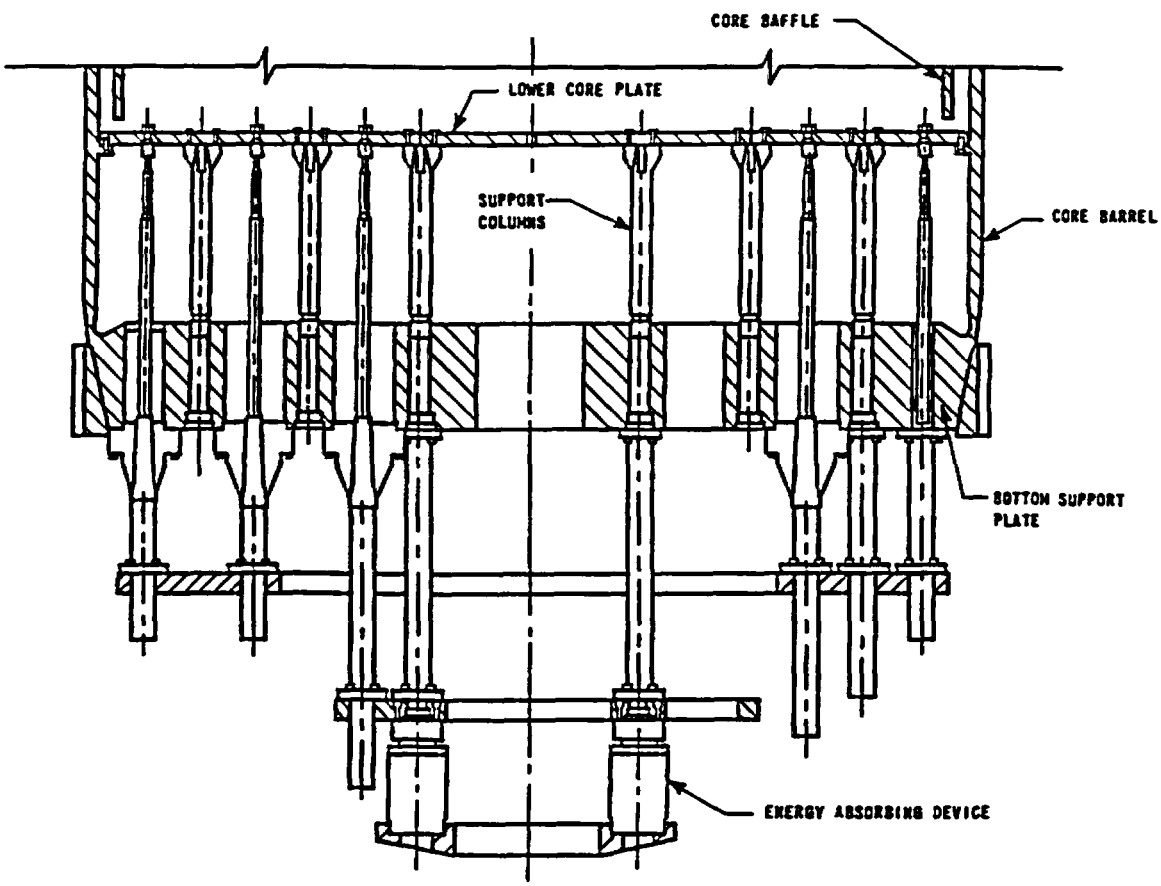

Figure 2.6 Westinghouse PWR secondary core support assembly

The upper core support assembly is defined by the top support plate on the top and the upper core plate in the bottom. Proper spacing between the two plates is maintained by support columns. Deep beam sections are attached to the bottom of the top support plate to increase its stiffness and to minimize deflections. Guide tube assemblies provide housing for CRA drive shafts and rod control cluster assemblies (RCCAs). The upper core support structure is moved as a unit during refueling operations. A sketch of the upper core support structure is shown in Fig. 2.7.

2.1.2.1 Top Support Plate

The top support plate, also called the upper support plate, serves as the primary structure for the attachments of other upper internal components. The plate transmits the weight of these components to the reactor vessel.

The top support plate is a perforated flat plate that is stiffened by deep beam sections at its bottom surface. The edge of the plate rests on top of the upper core barrel flange. The plate is held in place by the hold-down spring, which is in turn held down by the vessel head flange. Perforations on the plate provide access for the RCCAs and in-core thermocouple conduits.

The top support plate is also the dividing boundary between the upper plenum and the reactor vessel head region. The coolant flow, which enters the upper plenum through the upper core plate, is turned to a radial direction by the top support plate. The coolant flow exits through the core barrel outlet nozzles.

In some WE units, the flat top support plate is replaced by an upper support assembly. The upper support assembly is in the form of a shallow top hat or an inverted shallow top hat. In the top hat configuration, perforations on the top surface provide access for the RCCA and in-core thermocouple conduits. The rim of the top hat serves as a support flange, and it rests on the upper flange of the core barrel. The undersurface of the top hat is stiffened by deep beam sections. In the inverted top hat configuration, the bottom is a thick plate, and perforations on the plate provide access for the RCCA and in-core thermocouple conduits. The rim of the inverted top hat rests on the upper flange of the core barrel. The inverted top hat upper support assembly is not stiffened by deep beam sections.

2.1.2.2 Hold-down Spring

The hold-down spring limits the axial movements of core support structures. It is a large annular or ring spring. The core barrel upper flange, the annular hold-down spring, and the top support plate all rest on a ledge on the reactor vessel head flange. When the vessel head is installed on the pressure vessel, the hold-down spring is compressed by the tightening of the closure nuts, and the components resting on the ledge form a rigid joint that would restrict axial movement of the core support structures. The hold-down spring is made of type 403 stainless steel.

ORNL-DWG 92-3461 ETD

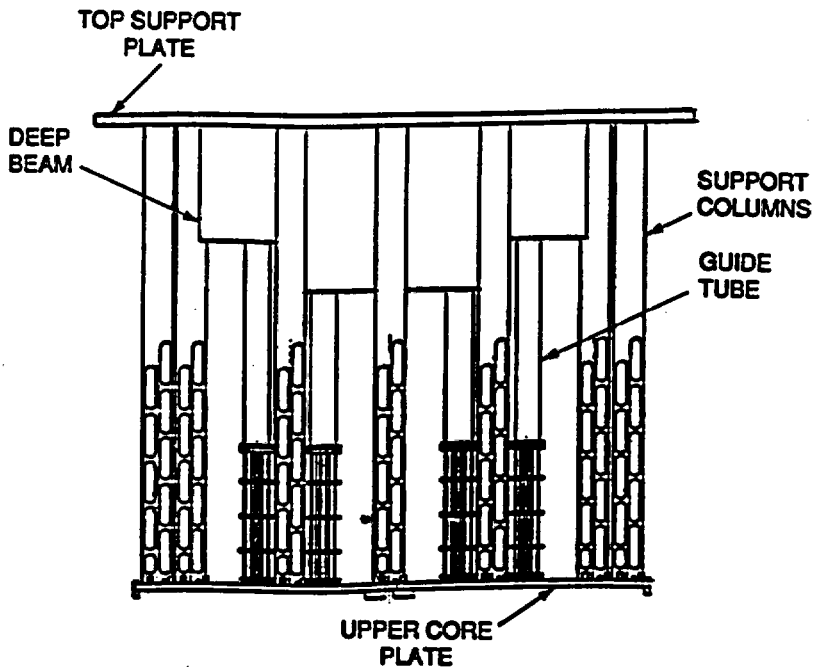

Figure 2.7 Westinghouse PWR upper core support structure

2.1.2.3 Deep Beam Sections

Deep beam sections are welded to the bottom surfaces of the top support plate and the upper support assembly with a top hat configuration. The beam sections increase the plate stiffness, and loadings acting on the plate are transmitted to the reactor vessel without excessive deformations. Deep beam sections are not used in the upper support assembly with an inverted top hat configuration.

2.1.2.4 Upper Support Columns

Upper support columns are tubular structures bolted to the top support plate and the upper core plate. The bolts are made of type 316 stainless steel.

The upper support columns maintain the proper spacing between the top support plate and the upper core plate. They transmit loadings from the upper core plate to the stiffened top support plate that, in turn, transmits the loadings to the reactor vessel. Some of the support columns also provide structural supports to in-core thermocouple conduits.

2.1.2.5 Upper Core Plate

The primary function of the upper core plate is to establish proper alignment for the upper core support structure, the lower core support structure, fuel assemblies, and control rods. The upper core plate is a perforated plate bolted to the lower ends of the upper support columns. The bolts are made of type 316 stainless steel.

The upper core support structure is positioned with respect to the lower core support structure by a pin-slot alignment scheme. Four uniformly spaced flat-sided pins are welded to the inside surface of the core barrel at the elevation of the upper core plate. Slots are milled into the upper core plate at the corresponding positions. When the upper core support structure is lowered into the core barrel, the slots engage the flat-sided pins in the axial direction, and proper alignment is achieved. The pin-slot alignment scheme will also restrict lateral displacements of the upper core support structure.

The top ends of fuel assemblies are aligned by locating pins protruding from the bottom of the upper core plate. The pins engage the fuel assemblies when the upper core support structure is lowered into place.

2.1.2.6 Guide Tube Assemblies

Guide tubes provide housings for control rod drive shafts and RCCAs. They shield these components from effects of cross-flows in the upper plenum region of the reactor pressure vessel. Guide plates are used to maintain proper spacing of the RCCA rodlets in the guide tubes.

The guide tube assembly is a tubular structure and is divided into two parts or assemblies, with the upper support plate serving as the dividing line. The upper assembly, often referred to as the control rod shroud tube, is fastened to the top of the upper support plate. RCCAs enter the upper plenum through openings in the reactor vessel head, and they are inserted into the top openings of the control rod shroud tube. The lower part is called the control rod guide tube. The top end of the control rod guide tube is fastened to the bottom of the top support plate, and the lower end is held in place by split pins inserted into the upper core plate. The split pins are bolted to the guide tube bottom; the support will allow limited axial movements of the lower end of the guide tube, but lateral displacement will be restrained.

2.1.3 In-core Instrumentation Support Structures

In-core instrumentation support structures are stainless steel tubular structures that provide housing and support to in-core instrumentation such as in-core thermocouples and thimbles of the reactor flux-mapping system.

Thermocouple housings penetrate the vessel through the vessel head, while the flux thimble guide tubes enter the vessel through the bottom. In a few of the older reactors, all in-core instrumentations penetrate the vessel from the vessel head.

2.1.3.1 In-core Thermocouple Housing

In-core thermocouple housings house and guide in-core thermocouples before their insertion into the core. The housings start as port columns that penetrate the vessel from the vessel head. They are also referred to as upper in-core instrumentation port columns. These port columns are slip-connected to in-line columns fastened to the top support plate. Thermocouples are inserted through these port columns and the top support plate to positions above their sensor locations in the core.

2.1.3.2 Flux Thimble Guide Tubes

Flux thimbles are components of the reactor in-core neutron monitoring or flux-mapping system. They are inserted into the reactor pressure vessel through the bottom. Flux thimbles are retracted during refueling and maintenance operations. Guide tubes provide housing and support to these thimbles along most of their lengths. Because they

enter the reactor vessel through the bottom, they are also referred to as lower in-core instrumentation.

A thimble guide tube is divided into two parts. The upper part is located inside the fuel assembly, while the lower portion is located between the reactor vessel bottom and the lower core plate. The segment of the flux thimble between the bottom of the fuel assembly and the top of the lower core plate is not protected by the guide tube, and it is exposed to the reactor coolant flows.

When they leave the reactor vessel, flux thimbles are located inside high-pressure conduits, which penetrate the pressure vessel from the bottom. The high-pressure conduits, containing the flux thimbles, continue on to the seal table. A simplified sketch of the flux thimble and guide tube arrangement is shown in Fig. 2.8.

The thimbles are sealed at the reactor end. The region between the flux thimble and the high-pressure conduit is maintained at the reactor coolant pressure, and it is sealed by a mechanical seal at the seal table. The flux thimble tube and the high-pressure conduit are considered as a part of the reactor primary pressure boundary.

2.2 Babcock & Wilcox (B&W) Internals

B&W reactor internals are grouped into two main structural assemblies: the core support assembly and the plenum assembly. In-core instrumentation guide tubes are a part of the core support assembly, and CRA guide tubes belong to the plenum assembly. A sketch of the arrangement of B&W reactor internals is shown in Fig. 2.9.

The core support assembly is the primary core support structure. The plenum assembly is used to maintain a proper alignment of the control rod guide tubes.

2.2.1 Core Support Assembly

The core support assembly is the major core support structure, and it consists of the core support shield, the core

ORNL-DWG 93-2888 ETD

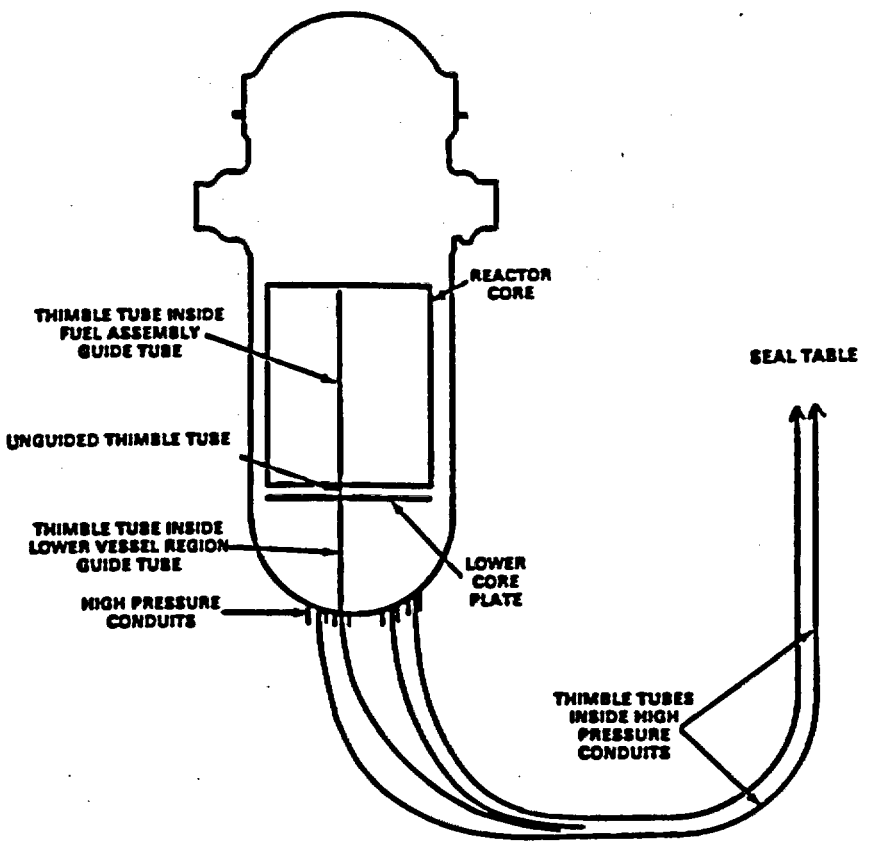

Figure 2.8 Westinghouse PWR thimble and guide tube

ORNL-DWG 93-2889 ETD

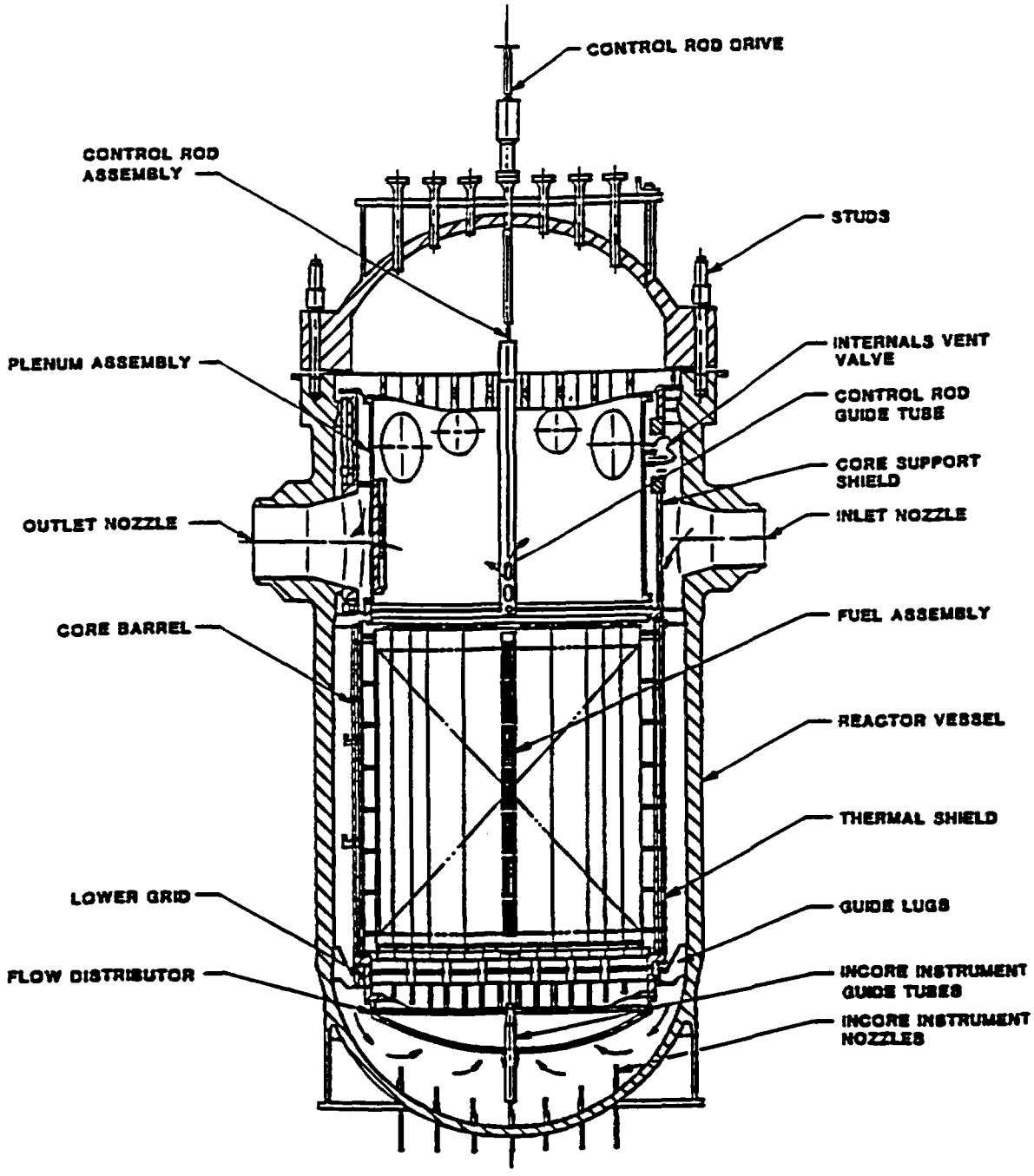

Figure 2.9 B&W PWR internals

barrel, the lower grid assembly, the flow distributor, the thermal shield, surveillance specimen holder tube, in-core instrumentation guide tubes, and internal vent valves. The core support shield and the core barrel are the major components of the core support assembly. They provide structural support and attachment points to other internal components.

In addition to its core support functions, the core support assembly also directs and guides the coolant flow in the core region. The flow enters the vessel through inlet nozzles, and the core support shield turns the coolant flow downward in the annular region between the core barrel and the vessel wall. The coolant flow is turned upward at the bottom of the vessel, and it goes up to the core through the flow distributor and the bottom grid.

The core barrel guides the coolant flow through the core. The main flow is upward through the fuel assemblies outlined by the core baffle. A small quantity of the coolant is also diverted to flow upward in the region between the core baffle and the core barrel. The coolant pressure in the core baffle–core barrel region is maintained at a lower value than the main coolant pressure in the core. The resulting pressure differential helps to prevent the formation of tension stresses in the bolts attaching the vertical baffle plates to the horizontal former plates. In the event of flow leakages through gaps in the baffle plate joints, the pressure differential will force the coolant to move outward and away from the fuel assemblies. This bypass flow scheme can prevent fuel assembly damages caused by baffle plate water-jetting problems.

2.2.1.1 Core Support Shield

The core support shield provides structure supports to other internals and transmits loadings to the reactor vessel. The shield is a cylindrical structure with flanges at the ends. The top flange is forged, and it rests on a circumferential ledge in the reactor vessel closure flange. The core support shield lower flange is bolted to the top flange of the core barrel. The plenum assembly is located inside the core support shield. The position and orientation of the plenum assembly with respect to the core support shield are maintained by fixtures located on the shield inside surface. In some B&W units the lower end of the core support shield is welded to the top of the core barrel.

The core support shield wall contains two types of openings. The first type consists of outlet nozzles used for reactor coolant flow. The exact number of outlet nozzles is plant specific. The flow nozzles are formed by welding forged rings to the wall openings. The rings mate with internal projections of the reactor vessel outlet nozzles. The ring seal surfaces are sized and finished so that a clearance gap is maintained at cold condition to facilitate the installation and removal of components of the core support assembly. When the reactor is heated to the operating temperature, the differential thermal expansions of the stainless steel core support shield and the carbon steel reactor vessel will close the gap and form the necessary seal surface. The cold gap is sized so that when contact is made, maximum stresses in the reactor vessel and internal components remain below allowable values as stipulated in Sect. III of the *ASME B&PV Code*.

The second types of opening in the shield wall are internal vent valve openings. Mounting rings are welded to these openings for the installation of the internal vent valve assemblies. The exact number of vent valve openings is plant specific, but most B&W plants are equipped with four to eight internal vent valves.

2.2.1.2 Core Barrel

The core barrel supports the fuel assemblies, the lower grid assembly, flow distributor, and in-core instrumentation guide tubes. It guides the primary coolant flow through the core.

The core barrel is a cylindrical structure with flanged ends. The upper flange is bolted to the lower flange of the core support shield, and the lower flange is bolted to the lower grid assembly. In some B&W units, the top end of the core barrel is welded to the lower end of the core support shield.

The core baffle is considered as an integral part of the core barrel. The baffle is formed by bolting a series of horizontal former plates to the inside surface of the core barrel. Vertical baffle plates are then bolted to the inside edges of the horizontal former plates. The vertical baffle plates form the boundary of the fuel assemblies.

2.2.1.3 Lower Grid Assembly

The lower grid assembly provides structural supports to the fuel assemblies, the thermal shield, and the flow distributor. Fixtures attached to the lower grid assembly also align the in-core instrumentation guide tubes with fuel assemblies' instrument tubes.

The assembly consists of two grid structures connected by short tubular columns and surrounded by a forged cylinder with flanges at the ends. The upper grid structure is a perforated plate attached to the top flange of the forged cylinder. Pads bolted to the perforated plate are used to align the fuel assemblies and in-core instrumentation guide tubes. The lower grid structure is formed by welded intersecting plates. In some units, the lower grid structure is a machined forging.

The lower and upper grid structures are connected by tubular columns. Also a perforated plate located midway between the two grid structures is used to generate a uniformly distributed coolant flow to the core. The lower grid structure rests on and is also bolted to the lower flange of the core support shield. The top flange of the forged cylinder is bolted to the lower flange of the core barrel.

2.2.1.4 Flow Distributor

The flow distributor is a perforated dished head with an external flange that is bolted to the bottom of the lower grid assembly.

Perforations in the flow distributor produce a uniform coolant flow to the core entrance. The flow distributor also provides support to the in-core instrument guide tubes.

2.2.1.5 Thermal Shield

The thermal shield protects the reactor vessel wall from excessive gamma heating and radiation damages. It shields the vessel wall from fast neutron fluxes and gamma radiations. The shield is located in the annular region between the core barrel and the reactor vessel wall.

The thermal shield is a cylindrical structure. The upper end of the shield is restricted against radial vibratory motions by restraints bolted to the core barrel cylinder. The lower end of the shield is shrunk-fit onto the upper flange of the forged cylinder in the lower grid assembly. As an added assurance, 96 high-strength bolts are also used to secure the thermal shield to the upper flange of the forged cylinder. The bolts are made of grade A 286 stainless steel. A sketch of the thermal shield lower support is shown in Fig. 2.10.

2.2.1.6 Surveillance Specimen Holder Tube (SSHT)

SSHTs are cylindrical tubes mounted on the outside surface of the thermal shield. Each tube can hold two surveillance capsules, and the exact number of tubes in a reactor is plant specific. There is an off-set for the tubes, and they are located at a short distance from the thermal shield outside surface. The span of the tube typically extends from the top of the core support shield to the lower end of the thermal shield. There are usually three support mounts for each holder tube.

2.2.1.7 In-core Instrumentation Guide Tubes

In-core instrumentation guide tubes provide housing and supports to in-core instruments from penetrations in the reactor vessel bottom head to instrument tubes in the fuel assemblies. Guide tubes are segmented tubular structures with different diameters for the various sections. The lower end of the tubes are connected to instrument penetrations at the vessel bottom head. The tubes then go through openings in the flow distributor and the lower grid assembly before being connected to instrument tubes in the fuel assemblies.

2.2.1.8 Internal Vent Valves

The use of internal vent valves is a unique design feature of B&W PWRs. The primary function of the internal vent valve is to release the pressure buildup in the reactor upper plenum region following a cold-leg pipe break accident.

The internal vent valve assemblies are attached to mounting rings welded to openings in the wall of the core support

ORNL-DWG 92-3328 ETD

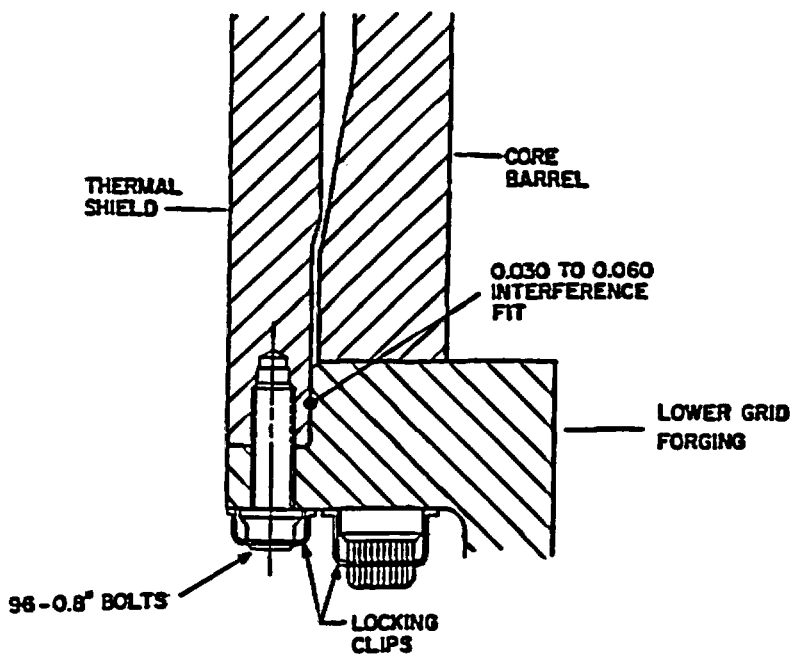

Figure 2.10 B&W PWR thermal shield lower support

shield. The mounting rings also contain devices and features that are used to align and position the valve assembly for proper operation of the valve disk. The internal vent valve assembly consists of a hinge assembly, the valve disk with sealing surfaces, split-retaining rings, and fasteners. The design of the internal vent valve is similar to that for swing check valves. The vent valves are uniformly spaced around the circumference of the core support shield wall, and the exact number of valves required is plant specific. A sketch of an internal vent valve assembly is shown in Fig. 2.11.

Under normal reactor operating conditions, the coolant pressure in the annular region between the core support shield and the reactor vessel wall (downcomer) is higher than the coolant pressure in the core. The magnitude of this pressure differential during normal operations is ~0.29 MPa (42 psi). It will generate a large force that will press the valve disk seal face tightly against the tilted valve body seal face. Thus internal vent valves are closed during normal operations.

In the event of a cold-leg pipe break accident, the sudden loss of pressure would lead to rapid phase changes in the primary reactor coolant. The coolant becomes a two-phase mixture of steam and water. The pressure in the core region will drop from the operating pressure of 15.5 MPa (2250 psi) to ~10.6 MPa (1541 psi), which is the saturated pressure at the operating temperature of 316°C (600°F). The large thermal inertia of the core would prevent a rapid change in the fluid temperature in the core region. A large pressure differential now exists between the core region and the pipe break location, which is at the ambient pressure. The pressure differential will drive the reactor coolant from the core region to the pipe break location through two potential flow paths. The first flow path is through the hot leg and the steam generator. The second flow path is through the core and the cold leg. The flow rate through each path is determined by hydraulic resistances in each flow path. In any event, reactor coolant is transported from the core region to the pipe break location. If the process is not mitigated, the water level in the core will drop, and a portion of the core may be uncovered. Note that the process is dynamic, and the event could take place in a very short time interval.

The internal vent valve is designed to achieve a quick pressure equalization between the core region and the cold-leg pipe break location and to prevent the lowering of the water level in the vessel below the top of the core. After the pipe break occurs, decompression waves propagate from the cold-leg pipe break location into the reactor vessel. The fluid pressure of the core region becomes higher than the pressure in the annular region between the core support shield and the vessel wall. The direction of the resulting pressure force will now oppose the valve closing force generated by the hinge assembly. The valve closing force is overcome when the magnitude of the reversed pressure differential attains a value of 1034 Pa (0.15 psi). The valve will be fully opened with a pressure differential of no more than 2069 Pa (0.3 psi). When the internal vent valves are opened, the major reactor coolant flow path, the one with the least flow resistances, will be from the upper plenum of the core region to the cold-leg pipe break location. The opening of internal vent valves together with the activation of the emergency core cooling system can prevent the uncovering of the core in a cold-leg pipe break accident.

Because of their important safety function, internal vent valves are inspected and tested during refueling outages.

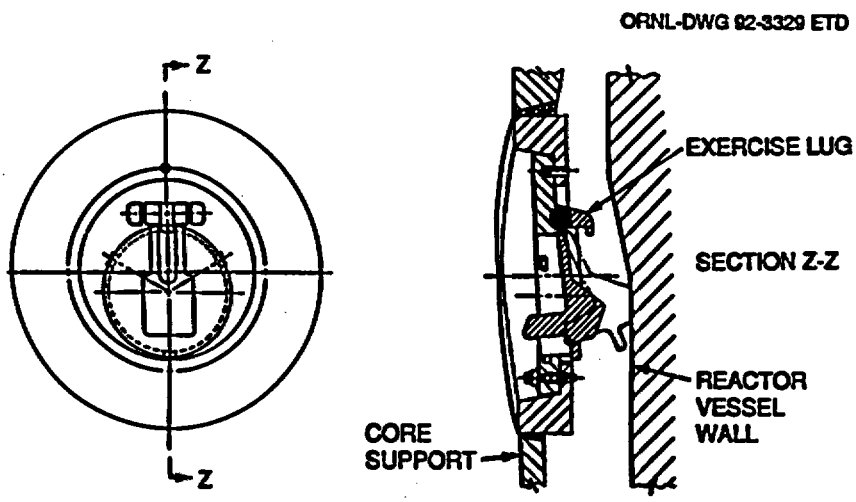

Figure 2.11 B&W PWR internal vent valve

The valves become accessible to visual inspections and mechanical testings after the vessel head and the plenum assembly are removed. A hook tool is used to engage the exercise lug, and the freedom of the movement of the hinged valve disk is tested. When the valve disk is raised, a remote visual inspection is also performed on the valve body and the sealing faces.

2.2.2 Plenum Assembly

The plenum assembly positions and supports the CRA guide tubes. It also provides a path for the reactor coolant to flow to the reactor outlet nozzles.

The assembly is made up of the plenum cylinder, the plenum cover, the upper grid, and CRA guide tubes. It is located inside the core support shield and directly above the core. The structural unit is formed by attaching the plenum cover and the upper grid to the upper and lower flanges of the plenum cylinder. CRA guide tubes connect the plenum cover and the upper grid. Lifting lugs are welded to the plenum cover, and the plenum assembly is removed as a single unit during refueling operations.

The plenum assembly is aligned with the reactor vessel closure head, control rod drive penetrations, and the core support assembly. When the bolts of the vessel closure head are tightened, a large clamping force is produced between the reactor vessel, vessel closure head, the core support shield upper flange, and the plenum cover assembly upper flange. The clamping force helps to form a rigid joint between the components involved, and it will limit movements of these components. Proper positioning is attained by the locking of keyways in the plenum assembly cover flange to keys in the reactor vessel flange. The bottom of the assembly, which is the upper grid, is restrained by the inside surface of the core support shield.

2.2.2.1 Plenum Cylinder

The plenum cylinder positions and supports CRA guide tubes and guides the reactor coolant flow to the outlet nozzles. It is a cylindrical structure with flanges at the two ends. The side wall contains holes as outlets for the reactor coolant flow. The plenum cover is attached to the top flange, and the upper grid is connected to the lower flange of the plenum cylinder.

2.2.2.2 Plenum Cover

The plenum cover aligns the upper ends of CRA guide tubes and provides support points for the lifting of the plenum assembly. The cover is formed by welding parallel intersecting plates to form square lattices, and the lattice structure is covered by a perforated flat plate with an integral flange at the periphery. The inner edge of the integral flange is attached to the upper flange of the plenum cylinder, while the outer edge of the flange is attached to the upper flange of the core support shield. Holes in the perforated plate are positioned to match the upper ends of the CRA guide tubes. Lifting lugs are welded to the plenum cover.

2.2.2.3 Upper Grid

The upper grid aligns the lower end of CRA guide tubes to the upper ends of fuel assemblies. The grid is a perforated plate bolted to the lower flange of the plenum cylinder, and it is also guided by the inside surface of the lower flange of the core support shield. Perforations in the plate position the lower ends of CRA guide tubes to the upper ends of fuel assemblies.

2.2.2.4 CRA Guide Tubes

CRA guide tubes provide housing and support to the CRAs. The tubes also shield the CRA from the effects of cross-flows in the plenum assembly. Guide tubes are also considered as structural components connecting the plenum cover to the upper grid.

A CRA guide tube is a tubular structure with a mounting flange welded to one end. The mounting flange is bolted to an opening of the upper grid, while the top end of the guide tube is welded to a perforation in the plenum cover plate. CRAs are located inside the guide tubes.

2.3 Combustion Engineering (CE) Internals

CE internals are divided into four structural units: the core support assembly, the upper guide assembly, the flow skirt, and the in-core instrumentation support system. A sketch of the arrangement of CE reactor internals is given in Fig. 2.12.

2.3.1 Core Support Assembly

The major core support structure is the core support assembly. The assembly consists of the core support barrel, the core support plate, the lower support structure, the core shroud, thermal shield, and the core support barrel to pressure vessel snubbers. Because of flow-induced vibration problems, thermal shields have been removed from several CE reactors. A typical core support assembly is shown in Fig. 2.13.

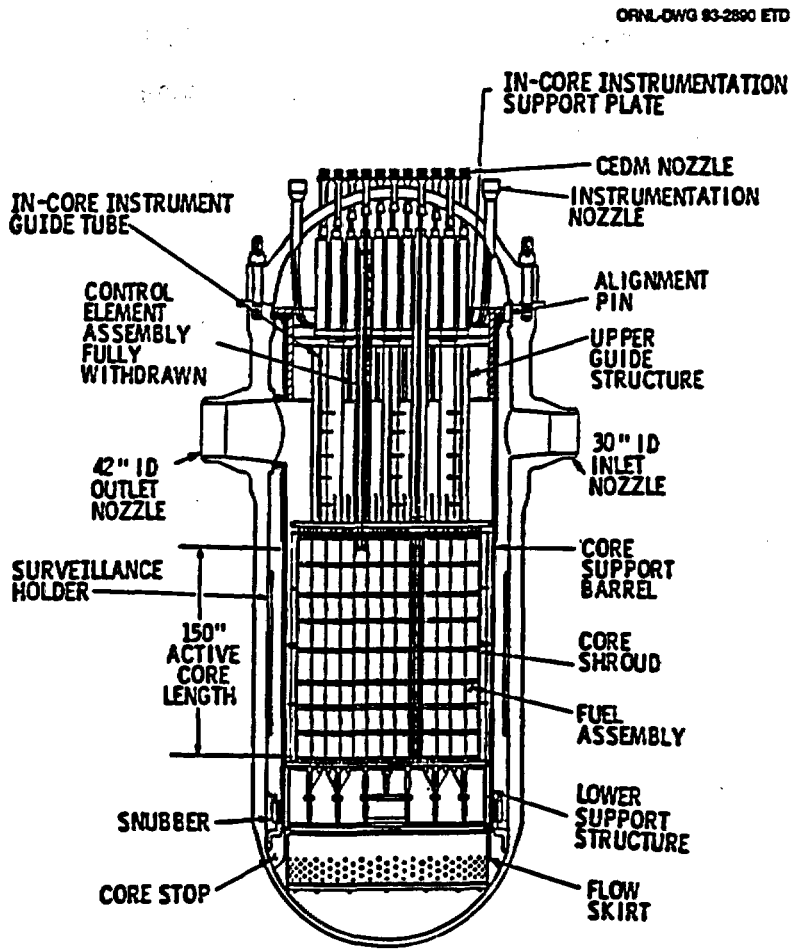

Figure 2.12 CE PWR internals

The core support assembly also directs and guides the reactor coolant flow through the core region. The coolant enters the pressure vessel through inlet nozzles and is turned to flow downward in the annular region between the core support barrel and the reactor vessel wall. The coolant flow is turned upward in the lower plenum. It flows through the flow skirt, the bottom of the core support barrel, and the lower support structure before entering the core through flow distribution holes in the core support plate. At the core exit, the coolant flow is turned to a radial direction in the upper region of the core support barrel and leaves the barrel through outlet nozzles. A small portion of the main coolant flow is diverted into the gap region between the core shroud and the core support barrel. This secondary flow is used to provide a more effective cooling of the core shroud. Other minor bypass flows are leakage flows through key-keyway alignment systems, instrumentation guide tubes, and nozzle clearances.

2.3.1.1 Core Support Barrel

The core support barrel transmits the weight of the fuel assemblies to the reactor vessel. A typical total weight of the fuel assemblies and claddings for a CE unit is ~133,333 kg (~300,000 lb). The barrel also provides proper alignment for the core support assembly, the upper guide structure assembly, the reactor vessel, and the closure head.

The core support barrel is a long cylindrical structure with an external ring flange at the top and an internal ring flange at the bottom. The top flange rests on a ledge in the reactor pressure vessel. Four equally spaced alignment keys are press-fitted into the top flange of the core support barrel. The reactor vessel, closure head, and the upper guide structure assembly flange are slotted to fit into the alignment key locations. The keys are used to align the core support assembly and the upper guide assembly with respect to the reactor pressure vessel. A cut-away view of the core support barrel is shown in Fig. 2.14.

Two outlet nozzles in the upper section of the core support barrel are fitted to internal projections of the reactor vessel exit nozzles. Four equally spaced guide pins are attached to the inside of the core support barrel just below the outlet

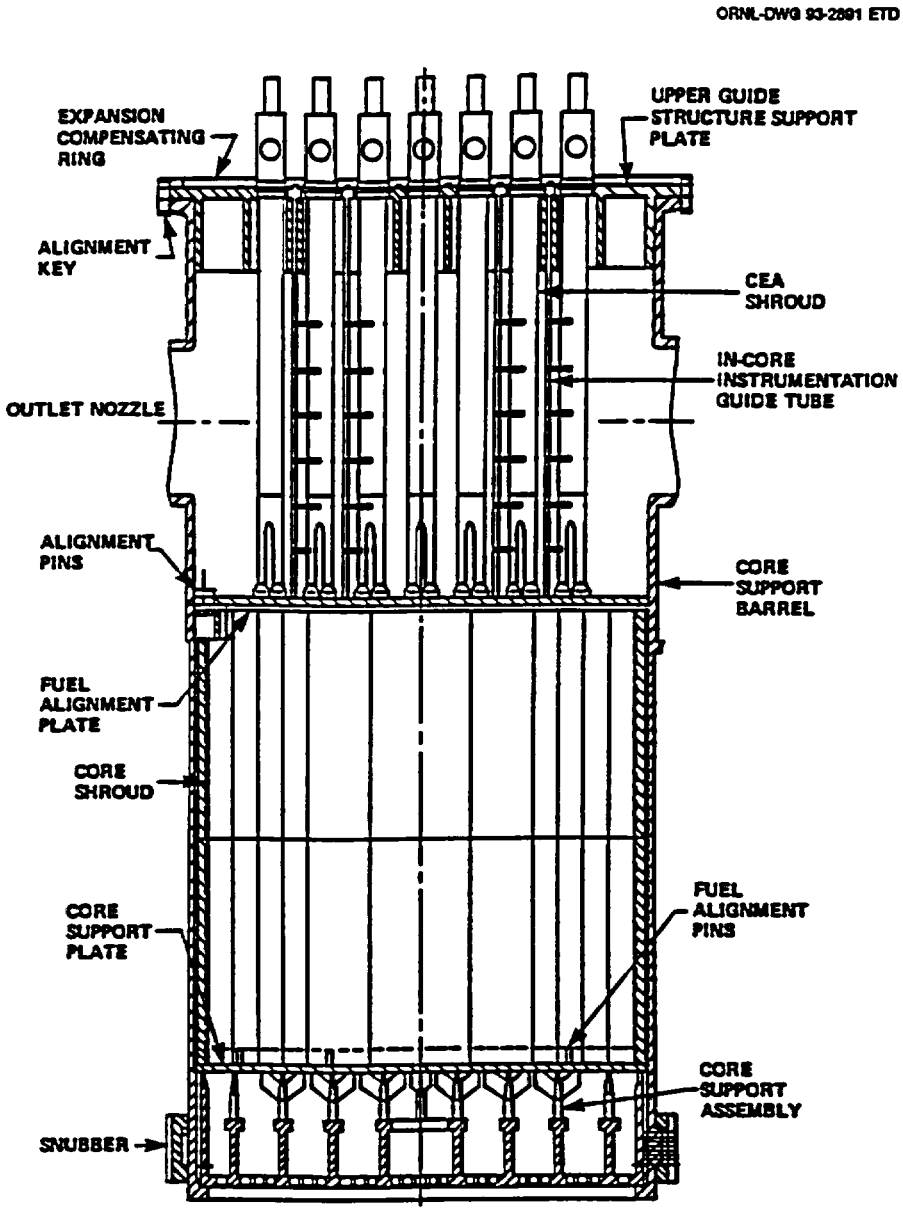

Figure 2.13 CE PWR core support assembly

nozzles, and the pins are used to align and to limit the movement of the upper guide assembly.

The core support plate rests on a ledge in the inside surface of the core support barrel. The ledge is located near the bottom of the barrel. The lower support structure rests on the internal ring flange at the bottom of the barrel.

The lower end of the core support barrel is restrained by snubbers located on the outside surface of the barrel. The snubbers allow radial and axial expansions of the core support barrel, but they will restrict lateral or circumferential barrel displacements.

2.3.1.2 Core Support Plate

The core support plate positions and supports the fuel assemblies. It is a perforated flat plate, and the perforations distribute coolant flow to the fuel assemblies. The fuel assemblies rest on the core support plate and are positioned by locating pins (four for each assembly) shrunk-fit to the plate. The core support plate rests on a ledge located in the inside surface of the core support barrel near the bottom end. The periphery of the plate is pinned, bolted, and lock welded to the ledge. The core shroud is also attached to the core support plate.

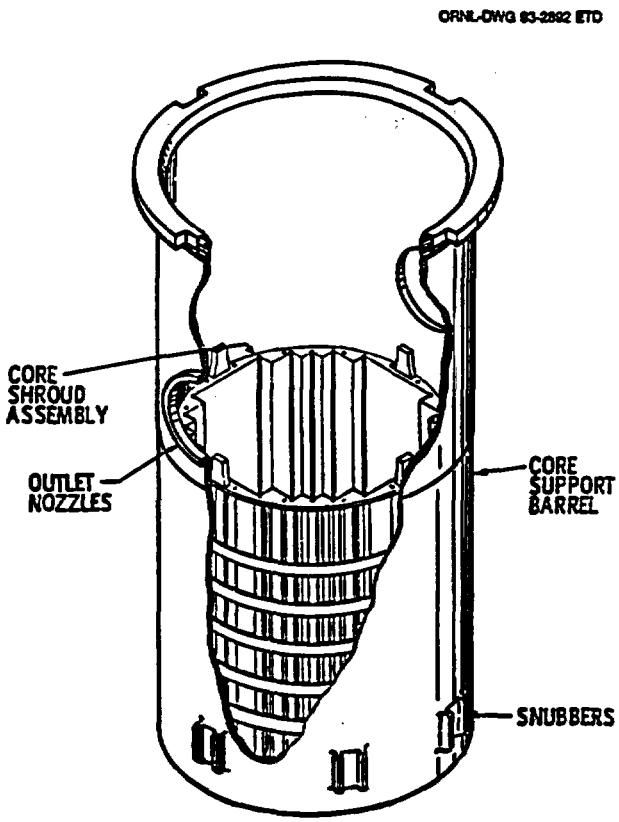

Figure 2.14 CE PWR core support barrel

2.3.1.3 Lower Support Structure

The lower support structure provides additional stiffness to the core support plate and also transmits a part of the core assembly weight to the bottom of the core support barrel. The lower support structure is a welded assembly that consists of a cylinder, columns, support beams, and a bottom plate. The core support plate is supported by columns, and the bases of these columns are welded to support beams. The bottoms of the support beams are welded to the bottom plate, which is perforated for coolant flow passage. The ends of the support beams are welded to the cylinder. The lower end of the cylinder is welded to the perforated bottom plate. The whole assembly rests on the internal ring flange of the core support barrel. The outer edge of the core support plate is also supported by the top end of the cylinder. The cylinder guides the main reactor coolant flow to the core and limits the core shroud bypass flow by means of holes located near the bottom of the cylinder.

2.3.1.4 Core Shroud

The core shroud forms the boundary of the core and controls the coolant flow through the core region. The shroud is formed by bolting vertical shroud plates to horizontal centering plates. The vertical plates, of varying widths, become the core boundary. The bottom of the vertical plates are attached to the core support plate by anchor bolts. The gap in the region between the core boundary and the core support barrel is maintained by seven tiers of horizontal centering plates. These centering plates are bolted to vertical core shroud plates and centered during assembly by adjusting bushings located in the core support barrel. All bolted joints in the core shroud are lock-welded. The location of the core shroud in the core support barrel is shown in Fig. 2.14.

Most of the coolant flows through the core. Holes are drilled in the horizontal plates to provide some coolant flow through the region between the core shroud and the core support barrel. The flow in the gap region will eliminate stagnation pockets and provide a more effective cooling to the shroud. Improved shroud cooling would reduce temperature gradients and minimize thermal stresses in the shroud and the core support barrel.

2.3.1.5 Core Support Barrel to Reactor Vessel Snubbers

The upper end of the core support barrel is clamped between the pressure vessel flange and the closure head. From a structural analysis standpoint, the core support barrel has a cantilevered support at the upper end, and no additional support would be needed. However, the core support barrel is submerged in a turbulent flow and is susceptible to flow-induced vibrations. The amplitudes of such flow-induced vibrations would be larger at the lower end of the barrel when it is not restrained. Snubbers are installed at the lower end of the core support barrel to limit and reduce the amplitude of potential flow-induced vibrations. The locations of the snubbers on the core support barrel are shown in Fig. 2.14.

The snubber system consists of six equally spaced lugs welded to the core support barrel outside surface. The core support barrel lugs act as the groove of a tongue-and-groove assembly. Mating lugs attached to the inside surface of the pressure vessel wall serve as tongues. An exploded view of the snubber assembly is shown in Fig. 2.15.

When the core support barrel is lowered into the pressure vessel, the pressure vessel lugs slide into the grooves of the core support barrel lugs. Shims are bolted to the side surfaces of the vessel lugs, and the corresponding surfaces of the barrel lugs are hard faced to minimize wear. There is no direct connection between the lugs. The gap clearance between mating surfaces will impose a limit on the barrel displacements. The snubber system will not impede thermal expansions in the axial and radial directions. It will, however, restrict lateral or circumferential expansions. The

ORNL-DWG 93-2893 ETD

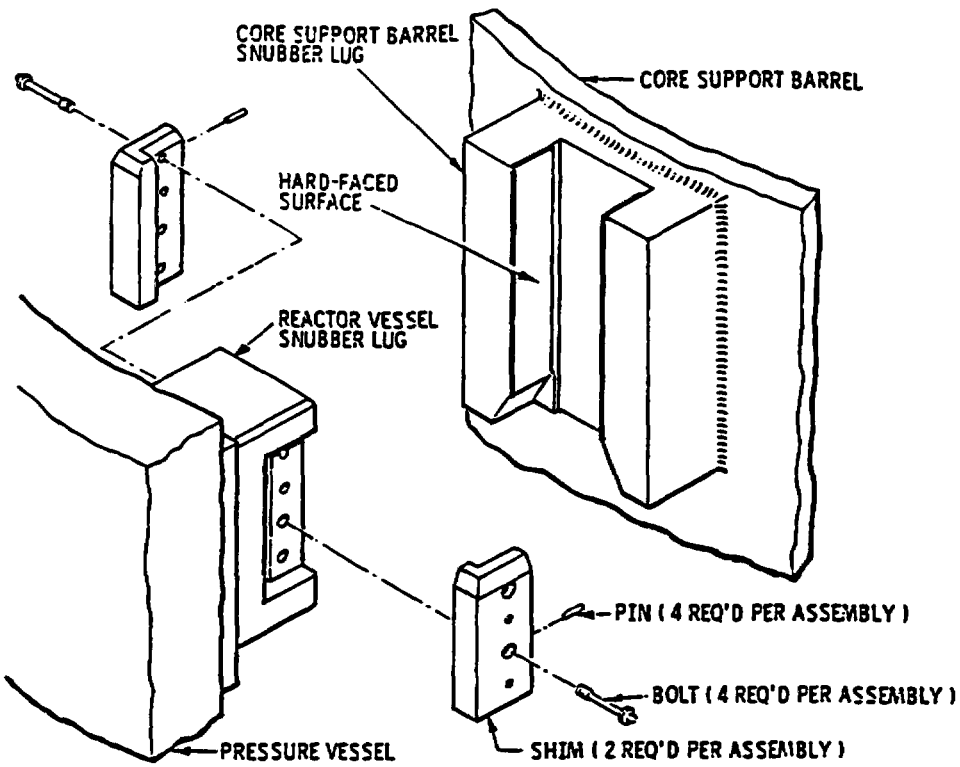

Figure 2.15 CE PWR core support snubber assembly

snubber system is not a fixed support system, and the core support barrel is not immune from small-amplitude vibrations.

2.3.1.6 Thermal Shield

The thermal shield is a cylindrical structure located in the annular region between the core support barrel and the reactor vessel wall. The upper end of the shield is supported by nine uniformly spaced lugs attached to the outside of the core support barrel. The lugs restrict the axial and tangential movement of the shield. A preloaded positioning pin under each lug is threaded radially through the shield and butts against the core barrel. The lower end of the shield is held in place in a similar manner by 17 radial positioning pins.

Because of flow-induced vibration problems, thermal shields had been removed from several CE reactors. Analysis results indicated that it is not necessary to replace these shields in the remaining design life of these reactors. Thermal shields are not used in the newer CE units.

2.3.2 Upper Guide Assembly

The upper guide assembly consists of the upper guide structure support plate assembly, the fuel assembly alignment plate, control element assembly (CEA) shrouds, and a hold-down ring. The assembly is handled as a single unit during refueling operations. A sketch of the upper grid assembly is shown in Fig. 2.16.

The upper guide structure (UGS) support plate assembly provides support and alignment to CEA shrouds, which shield the control rods from cross-flow effects in the upper plenum region. The CEA shrouds also provide support to in-core instrumentation. The fuel alignment plate positions the upper ends of the fuel assemblies. The hold-down spring holds down the fuel assemblies during normal operation and prevents the fuel assemblies from being lifted out of the core during accidents.

2.3.2.1 UGS Support Plate Assembly

The UGS support plate assembly is a welded structure. The assembly is constructed by welding a support flange to the top of a cylinder, and a support plate is welded to the cylinder inside surface at the cylinder midsection. In some CE units the support plate is located near the top of the cylinder, just below the support flange. The top of a grid array structure, made of welding intersecting deep beams, is welded to the bottom of the support plate. The ends of the deep beams are welded to the cylinder inside wall. The support plate and the deep beam grid array structure position and support the upper ends of CEA shrouds. Four

ORNL-DWG 93-2894 ETD

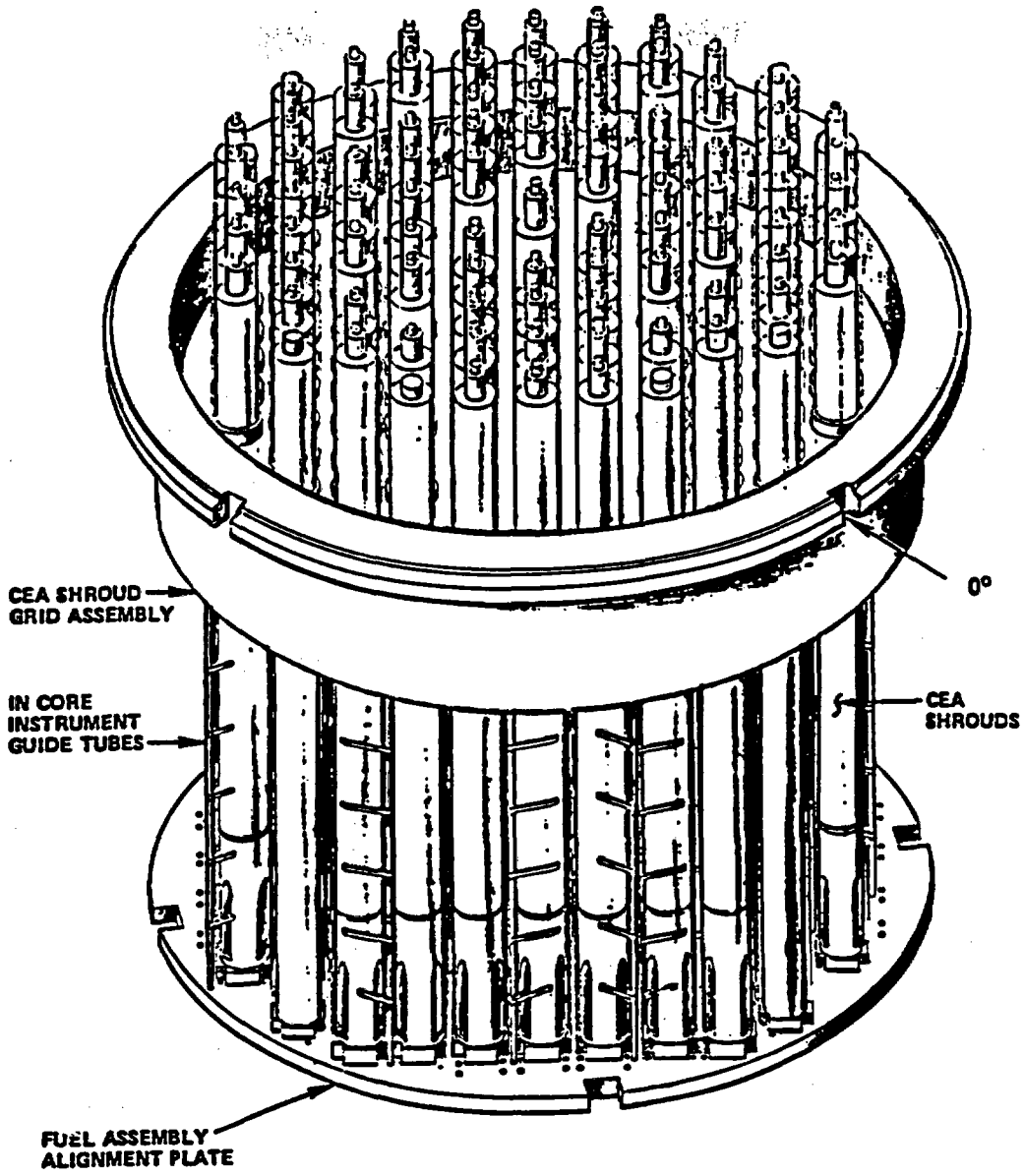

Figure 2.16 CE PWR upper grid assembly

equally spaced keyways are machined into the top support flange, and they engage the core support barrel alignment keys. The key-keyway alignment scheme ensures a proper alignment of the core with respect to the reactor closure head and CEA drive mechanisms.

In the new CE units, the UGS support plate assembly is replaced by a UGS support barrel assembly. The UGS support barrel assembly consists of a ring flange welded to the top of a circular cylinder. A circular plate is welded to the bottom of the cylinder. The ring flange rests on the hold-down ring that, in turn, sits on the core support barrel upper flange. Four uniformly spaced keyways are machined into the support barrel ring flange and the hold-down ring, and they will engage core support barrel alignment keys. The bottom plate of the support barrel provides support and alignment to CEA shrouds.

2.3.2.2 Fuel Assembly Alignment Plate

The fuel assembly alignment plate positions the upper ends of the fuel assemblies and also provides support to the lower ends of CEA shrouds. Locating holes are machined into the plate to engage posts on the fuel assembly upper end fittings. Four equally spaced slots or keyways are also machined into the outer edge of the fuel assembly alignment plate, and they engage pins protruding from the core

support barrel. The pin-keyway arrangement restricts lateral displacements of the upper guide assembly during operations. The fuel assembly alignment plate presses down on the fuel assembly hold-down ring, and the upward reaction forces are transmitted via the alignment plate and CEA shrouds to the flanged UGS support plate.

2.3.2.3 CEA Shrouds

CEA shrouds in most CE reactors are tubular structures. They extend from the fuel assembly alignment plate to an elevation above the support plate of the UGS assembly. The shrouds protect CEAs from cross-flow effects in the upper plenum.

The majority of CEA shrouds are the five-element type, and they are made by welding a cylindrical section to a base; the base is bolted and lock-welded to the fuel assembly alignment plate. Flow channel inlets are machined into the cylindrical section at the base, and they serve as a passageway for the coolant flow through the fuel assembly alignment plate. The upper ends of the shrouds are connected to the UGS support plate by spanner nuts, which would allow the shrouds to expand in an axial direction.

Four-element shrouds are located at the periphery of the UGS support plate, and they consist of a cylindrical section welded to a base; the base is bolted and lock-welded to the fuel assembly alignment plate. The upper section of the shroud is welded directly to the UGS support plate.

In the older reactors, the CEA shrouds have a cruciform configuration, and they extend from the fuel assembly alignment plate to an elevation just above the reactor vessel flange. The shroud is fabricated by welding four formed plates to four end bars to complete a cruciform-shaped structure. The shroud ends are fitted with support pads. The bottom ends are bolted and lock-welded to the fuel assembly alignment plate and the top ends to the UGS support plate. CEAs located inside these cruciform shrouds also shield them from cross-flow effects.

2.3.2.4 Hold-down Ring

The hold-down ring restricts axial displacements of internal components. Differential thermal expansions, fuel growth, and rotations of the closure head during bolt tightening and pressurization are major causes of internal component axial displacements. The hold-down ring is also referred to as the expansion compensation ring.

The hold-down device is a segmented circular frame, and each ring segment is bolted to the flange of the UGS. Each ring segment contains plungers supported by Belleville washers, and the compression of these devices will result in an axial hold-down force acting on the upper guide assembly. The ring segments are fabricated from type 403 stainless steel.

A shim plate is inserted into the space between the UGS and the core support barrel flange to accommodate internal components' axial expansions.

2.3.3 Flow Skirt

The flow skirt is a perforated right circular cylindrical structure with stiffening rings at its top and bottom. The skirt is supported by nine equally spaced machined sections welded to the bottom head of the reactor pressure vessel. There is no connection between the flow skirt and other internal components. The skirt is made of Inconel. The flow holes are designed to provide a uniform inlet flow to the core.

2.3.4 In-core Instrumentation Support Structure

The in-core instrumentation support structure is a part of the in-core neutron flux monitoring system. It consists of an instrumentation support plate that fits in the recess section of the UGS assembly and is supported by four bearing pins. CEA shrouds extend through perforations in the instrumentation plate. The in-core instruments are guided and protected by in-core instrumentation guide tubes that route the instruments to various locations in the core. The guide tubes are bent and grouped together to form cluster assemblies above the instrumentation plate. The clusters are supported by frame-type structures bolted to the instrumentation plate, and they extend into the reactor vessel head instrumentation nozzles. A sketch of an in-core instrumentation support structure is shown in Fig. 2.17.

Reference

1. American Society of Mechanical Engineers, *ASME Boiler and Pressure Vessel Code*, Section III, Nuclear Power Plant Components, Div. 1.*

*Available from American National Standards Institute, 1430 Broadway, New York, NY 10018, copyrighted.

ORNL-DWG 93-2895 ETD

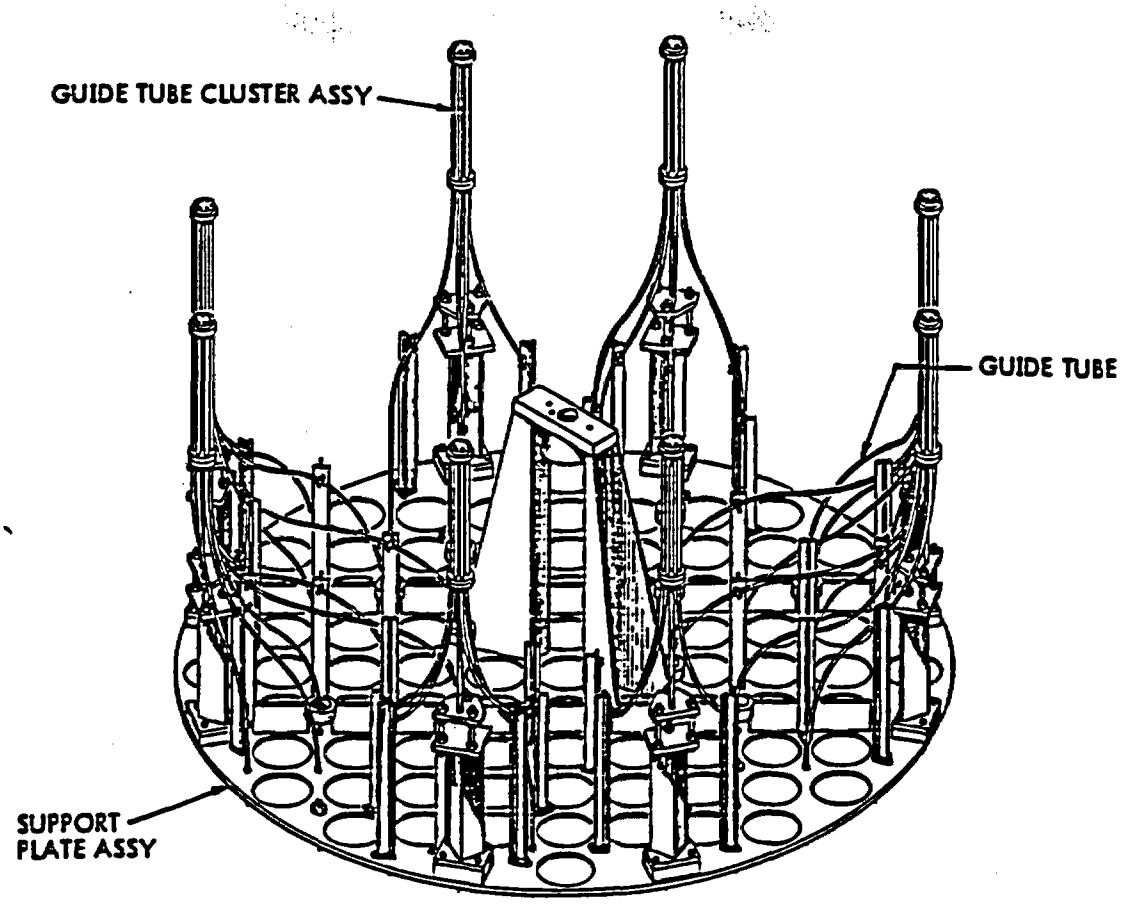

Figure 2.17 CE PWR in-core instrumentation support structure

3 Primary Stressors

In the context of aging studies, stressors are conditions that will promote the development and sustain the growth of aging-related degradation mechanisms. Applied loads, environmental conditions, and manufacturing processes can impose stressors on reactor internals.

Applied loading is an important stressor for internal components. The majority of the internals are not parts of the reactor coolant primary pressure boundary and are not subjected to static pressure differential loadings. Flow-generated oscillatory hydrodynamic forces and preloads in bolts are the applied loadings of concern to reactor internals.

The operating environment inside the pressure vessel also imposes many stressors on internal components. Reactor internals are submerged in the reactor primary coolant flow. The coolant temperature in the core region, where most internals are located, is ~316°C (600°F), and the average coolant flow speed is ~4.9 m/s (16 ft/s). The nominal system pressure in the reactor vessel is ~15.5 MPa (2250 psia). These conditions can generate many aging-related stressors. Normal reactor operating conditions for the three types of PWRs may vary, but in general they do not deviate significantly from conditions mentioned above.

Because of their proximity to the core, some internals are exposed to stressors associated with fast neutron fluxes and the heating of gamma radiation.

Accidents can impose much more severe thermal and mechanical loadings on reactor components. However, the emphasis of the present study is on effects of normal plant operations, which constitute the great majority of the operating history of the reactor.

3.1 Applied Loads

Thermal and mechanical loads are the major applied loads acting on reactor internals during normal steady-state and transient (startup or shutdown) operations. Thermal loads are produced by temperature gradients in a component, by thermal expansions of different materials, and by restricted thermal expansions. Mechanical loads are generated by static pressure differentials, preloads in bolts, and fluid-flow-generated cyclic forces.

Reactor internals are designed to accommodate thermal expansions; as a result, constraint-induced thermal loads are kept at a low level. The existence of temperature gradients and rapidly changing temperatures in a component are important thermal stressors. They can lead to thermal cycling and fatigue crack initiation.

The two major sources of static applied loads are differential pressure loads and preloads in bolts. Most internals are not a part of the reactor primary pressure boundary and are not subjected to large static differential pressure loads. Preloads in bolts can produce tensile stresses that may reach the yield stress value of the bolt material. Tensile stresses of such a magnitude are considered as an essential factor to the development of stress corrosion cracking (SCC).[1]

The applied loads of primary concern to reactor internals are flow-induced oscillatory hydrodynamic forces. The volume flow rate for PWRs ranges from 250 to 380 L/s (4000 to 6000 gal/min), and the coolant is forced through the reactor vessel by reactor coolant pumps. Major sources of flow-related excitations are the pump-generated pressure pulsations at the pump rotational speed, blade passing frequencies, and their harmonics. Pressure pulsations can act as periodic forcing functions on reactor internals, and their effects are most pronounced at the entrance regions of the vessel inlet nozzles.

Two types of hydrodynamic forces act on a blunt object when it is placed in a flow stream. The first type is a static load and is usually referred to as a drag force. The second type is a time-dependent force induced by flow separations. The weights of the components and structural supports are sufficient to counterbalance the drag forces. The cyclic or periodic flow-generated hydrodynamic forces may force a structure to vibrate. Flow-induced vibrations can lead to fatigue failures and mechanical wear.

A third source of flow-related stressors is the highly turbulent flow generated by the forced flow through gaps and other small openings. A structure located in the wake of such high-intensity turbulent flows can undergo vibrations caused by the time-dependent hydrodynamic forces. Baffle plate water-jetting is an example of such flow-induced vibration problems.

3.2 Environmental Stressors

The primary environmental stressors for reactor internals are related to the operating environment inside the reactor pressure vessel. They include contact with the primary

Primary

reactor coolant flow and exposure to fast neutron fluxes. Long-term contacts with a high-temperature fluid medium and exposures to fast neutron fluxes may lead to physical changes and deterioration in some of the materials of construction for reactor internals. Neutron irradiation effects may cause embrittlement and irradiation-assisted SCC in stainless steel components. Parts made from cast austenitic stainless steels (CASSs) are susceptible to thermal aging effects.[2]

The coolant is borated water of high purity. The corrosiveness of the coolant is determined by the quantity of dissolved oxygen content, concentrations of impurities, and boric acid present in the flow stream. The dissolved oxygen is a product of the radiolytic reactions in the core, and the process is generic to reactor operations. The hydrogen overpressure system in the volume control tank of the chemical and volume control system adds hydrogen gases to the flow stream, which act as scavengers and remove most of the dissolved oxygen. However, it is possible that locally high concentrations of dissolved oxygen and other impurities may exist in crevices in some internal components. PWR internals are susceptible to corrosion attacks.

Chlorides and fluorides are the two impurity components in the reactor primary cooling water that are of concern to reactor internals. They can be introduced into the flow system by condenser leakage and as impurities in the reactor make-up water. Impurities may be trapped in crevices, and their concentrations may reach such a level that corrosion cracks can be initiated in the affected components.

Boron, as boric acid dissolved in the cooling water, is the preferred nuclear poison used for reactivity control in PWRs. Some reactor components, usually made of high-nickel alloys, are susceptible to corrosion attacks in boric acid solutions under a stagnant condition. Reactor internals are submerged in a flowing fluid medium, and they are usually not sensitive to boric acid corrosion attacks.

An important environmental stressor for some internals is the exposure to fast neutron ($E > 1$ MeV) fluxes. The neutron irradiation effects are most pronounced for components located in the immediate vicinity of the core. Prolonged bombardments by neutrons can change the mechanical and physical properties of the materials. Specifically, they will increase yield and ultimate strengths and reduce the uniform elongation to fracture and fracture toughness. Irradiation effects can also lower the temperature at which creep can become a significant deformation mechanism. Exposure to neutron fluxes can also lead to a lowering of the threshold stress level that is considered as necessary for the development of SCC.[3] These changes could have potentially adverse effects in the structural integrity of reactor internals.

3.3 Manufacturing Stressors

The processes used to fabricate reactor components may introduce stressors to the finished parts. Welding, bolting, cold working, and casting are four common processes used in the making of reactor internals. Stressors are associated with each of these processes.

Welding is a common method for attaching components together to form an integral structural unit. Austenitic stainless steel such as type 304 may be sensitized in a welding process. The chromium depletion sensitization process can make the finished products susceptible to SCC. Residual stresses in weldments, if not properly heat relieved, may also contribute to the development of SCC.

Many reactor core support structures are joined together by bolts. Gaps and crevices in bolted joints can create a local environment that is conducive to the development of corrosion attacks. Preloads in bolts and the resulting tensile stresses are stressors that can aid the SCC process.

Cold working is used in the making of some internal components. The component is formed to a predetermined shape by a bending operation. Plastic strain accumulation and surface flaws are the stressors associated with a cold working operation. They can lead to crack initiations and accelerated crack growths.

Some stainless steel internals are cast in one piece. While casting may eliminate many of the stressors associated with welding, bolting, and cold working, it is not a stressor-free manufacturing operation. CASS components are susceptible to thermal aging effects.

Stressors imposed on reactor internals by applied loads, environmental conditions, and manufacturing processes are the basic ingredients for the development of aging-related degradation mechanisms. Stressors that are present in a system, whether acting independently or in conjunction with others, will initiate the aging degradation process. Degradation mechanisms develop at different rates and, unless correction or preventive measures are taken, will eventually lead to failures in the affected components. A review of the failure history of reactor internals can provide useful information on the relative development rates of potential aging-related degradation mechanisms. Understanding of the synergistic relationship between

stressors and aging degradations is also the basis for the formulation of strategies for managing aging effects.

References

1. R. L. Cowan and C. S. Tedmon, "Intergranular Corrosion of Iron-Nickel-Chromium Alloys," *Advances in Corrosion Science and Technology*, Vol. 3, M. S. Fontana and R. W. Staehle, Eds., Plenum Press, New York, 1973.

2. O. K. Chopra and H. M. Chung, "Long-Term Aging of Cast Stainless Steel: Mechanisms and Resulting Properties," in *Proceedings of the Fifteenth Water Reactor Safety Research Information Meeting, Gaithersburg, MD*, USNRC Conference Proceedings NUREG/CP-0090, October 1987.*

3. A. J. Jacobs and G. P. Wozaldo, "Irradiation Assisted Stress Corrosion Cracking as a Factor in Nuclear Power Plant Aging," *J. Material Engineering* 9(4) (1988).†

*Available for purchase from the National Technical Information Service, Springfield, VA 22161.
†Available in public technical libraries.

4 Aging-Related Degradation Mechanisms

The development of an aging-related degradation mechanism is a time-dependent process. The process is initiated when the necessary stressor or stressors are present in the operating environment of the affected components. Once started, an aging degradation mechanism will remain active, and the deteriorating effects are cumulative. The affected components will eventually fail unless mitigating methods are used to remove the responsible stressors from the operating environment. When it is not feasible to eliminate the stressors, then it is essential to replace the degraded components before failure. One of the objectives of an aging study is to identify potential aging-related degradation mechanisms associated with the primary stressors of the system.

Aging-related degradation mechanisms generally associated with the operating environment of reactor internals are corrosion, fatigue, erosion, mechanical wear, embrittlement, creep, and stress relaxation. Corrosion includes general wastage and SCCs. Erosion is the loss of material caused by the flow of an abrasive and/or high-velocity fluid medium. Fatigue is vibration induced, and the responsible oscillatory forces can be either mechanical or thermal in nature. Vibration can also lead to mechanical wear and fretting. Embrittlement decreases the fracture toughness of a material and is caused by thermal aging and/or irradiation effects. Creep and stress relaxation may lead to changes in material properties and structural deformation mechanisms. They are usually caused by prolonged exposure to high temperatures and irradiation effects. The operating environment inside a reactor pressure vessel contains stressors that can activate all these potential aging-related degradation mechanisms.

4.1 Corrosion

Corrosion is a term applied to a class of aging effects in which the structural integrity of a component is weakened as a result of material deterioration caused by electrochemical reactions with the surrounding medium. The effects can be highly localized, or they can cover a large portion of the structure. The localized effects usually take the form of crack initiation and development, while the more global effects are general corrosion and wastage. Operating conditions, corrodents, and alloy compositions would determine the dominant corrosion mechanisms in a particular situation.

4.1.1 General Corrosion and Wastage

When a structure is submerged in a corrosive medium, the surface of the structure can become oxidized, and corrosion products can be removed by the fluid. The corrosion process occurs more or less uniformly over the entire contact surface. A moving fluid medium can increase the corrosion product removal rate. Austenitic stainless steels, specifically type 304, have good resistance to general corrosion and wastage.[1] General corrosion and wastage are not considered as significant aging-related degradation mechanisms for reactor internals made of stainless steels.

4.1.2 Corrosion Cracking

Materials that provide good resistance to general corrosion and wastage, such as stainless steels, are often susceptible to corrosion cracking. These failures are localized, and they have the appearance of microscopic brittle fractures. There is no visual indication of the presence of corrosion products, and if the cracks are not detected, failures can occur with little or no advance warnings. Most SCC mechanisms require the presence of tensile stresses in the structure as well as a corrosive medium. Other types of corrosion crackings can develop without tensile stresses. As a general rule, the presence of tensile stresses may accelerate the crack growth rate.

SCC is a major aging-related degradation mechanism for reactor internals. Crevices and irradiation effects can assist the SCC process.

4.1.2.1 SCC

It is generally accepted that the simultaneous presence of three conditions are necessary for the development of SCC: a susceptible material, a corrosive environment, and tensile stresses. Elimination of any one of the three conditions will stop the SCC process. Depending on the alloy compositions and corrodents involved, cracks can develop along boundaries between grains; such failures are known as intergranular stress corrosion crackings (IGSCC). In other cases, cracks propagate along certain crystallographic slip planes within the grains. These failures are referred to as transgranular stress corrosion crackings (TGSCC). More information on the fundamentals of SCCs can be found in texts by Logan[2] and Romanov.[3]

Austenitic stainless steels, such as type 304, have good resistance to general corrosion and wastage, but they can be made susceptible to SCCs by a sensitization process.[4] When a component made of type 304 stainless steel is heated or cooled slowly through the temperature range of 482 to 816°C (900 to 1500°F), carbon in the steel will precipitate out as chromium carbide along grain boundaries. Chromium, which is a key alloying element for providing

corrosion resistance, is depleted in regions adjacent to grain boundaries, and the chromium-depleted regions are susceptible to corrosion attacks. Slow cooling after annealings, prolonged stress-relieving operations, and welding can provide the temperature condition that is needed to sensitize stainless steels. For reactor internals made of type 304 stainless steel, welding is a likely cause of the sensitization process, and weld heat-affected zones (HAZ) are common locations for SCCs.

It should be emphasized that a susceptible material by itself, such as a sensitized stainless steel, cannot cause SCC. Other conditions must also be present in the system before SCC can occur.

The second requirement is a corrosive environment. Under normal PWR operating conditions, the primary reactor cooling water contains small quantities of dissolved oxygen, chlorides, fluorides, and other impurities. The impurities may contribute to the development of SCC when they are trapped in crevices in internal components.

Dissolved oxygen is a product of radiolytic reactions in the core. In steady-state PWR operations, the NRC Standard Technical Specification stipulates that the dissolved oxygen content in the reactor primary cooling water be kept at <100 ppb. The plant primary cooling water chemistry requirements, as stated in the Final Safety Analysis Report (FSAR), meet and exceed the Standard Technical Specification requirements for dissolved oxygen. The reactor chemical and volume control system, using hydrogen gas as a scavenger for the dissolved oxygen, can maintain a dissolved oxygen content at <5 ppb in the bulk of the primary cooling water system during steady-state power generation. At this concentration level, dissolved oxygen is not a factor in the development of SCC. However, pockets of high concentrations of dissolved oxygen may exist in crevices and can contribute to the development of SCC. In the presence of impurities such as chlorides, SCC may be initiated when the dissolved oxygen content is >40 ppb.[5] SCC in an oxygenated water environment is intergranular.

The Standard Technical Specification for PWR primary water chemistry also requires that the chloride and fluoride contents be kept at <150 ppb. Chlorides are of special concern. Under favorable conditions, the presence of chlorides and dissolved oxygen in the reactor primary cooling water may promote the development of SCC in austenitic stainless steel components.[6] In general, the quantity of chlorides required for the development of SCC decreases with increasing dissolved oxygen content. Experimental results with water in the range of 204 to 316°C (400 to 600°F) indicated that in the absence of dissolved oxygen, SCC will not occur even when the chloride content attains a level as high as 20,000 ppm. During steady-state PWR operations, the dissolved oxygen content in the bulk of the reactor cooling water is <5 ppb, and it is not likely that SCC can develop under such a low level of dissolved oxygen. Crevices, which can trap and create high local impurity concentrations, are needed to initiate SCC in PWR internals.

Sulfide is another corrodent that can cause SCC. It is not present in the reactor cooling water. However, molybdenum disulfide (MoS_2), often used as a thread lubricant, can create locally high sulfide concentrations in reactor internals with crevice conditions such as those that existed in bolted joints.[7] MoS_2 reacts with borated water, and one of the reaction products is hydrogen sulphide (H_2S), which is highly corrosive. H_2S can cause SCC in components made of stainless steel. Reactor internals that use MoS_2 as a lubricant are susceptible to sulfide-induced SCC.

Small quantities of fluoride are present in the reactor primary cooling water, and they may induce SCC in stainless steel components. However, information on fluoride-induced SCC in PWR conditions is very limited.

The development of SCC in reactor internals is only one of many concerns that need to be taken into consideration in establishing an optimum primary cooling water chemistry program for PWRs. Cracking problems in steam generator tubings and out-of-core radiation control are equally important factors. More detailed discussions concerning PWR primary water chemistry control can be found in Refs. 8 and 9.

The third requirement for the development of SCC is the presence of tensile stresses in a structural component. In the absence of significant irradiation effects, the magnitude of the tensile stresses must exceed a threshold value before SCC can occur. A generally accepted value for the threshold stress is the yield stress of the material of construction. Bolt preloads and weld residual stresses can generate the necessary tensile stresses in a reactor internal component.

Based on this information, it is reasonable to suggest that crevices in PWR internals are likely locations for the development of SCC. A "crevice condition" is a general term that is used to describe a small region in which high concentrations of corrodents may be trapped. Crevices are created by small holes, surface deposits, narrow gaps in gasket surfaces, lap, and bolted joints. The small region is usually filled with a stagnant liquid, and a differential aeration cell is established within the stagnation region. The

differential aeration cell can create locally high concentrations of anionic species such as chlorides in the crevice. The presence of bolt tensile stresses and dissolved oxygen would supply the necessary conditions for the development of SCC. Most crevice-assisted SCC is intergranular.

In addition to the crevice condition, exposures to fast neutron fluxes can also assist the SCC process. SCC has been observed in reactor components made of nonsensitized stainless steels. In most cases, stresses in these components are not high, and they are much lower than the yield stress of the material. A common factor in these nonsensitized stainless steel components is the exposure to high energy or fast neutron fluxes. These observations seem to suggest a new mechanism for the development of SCC. This form of SCC is known as irradiation-assisted SCC (IASCC); IASCC is intergranular.

Basic understanding of IASCC is not complete. Many theories have been proposed, but no one single theory can satisfactorily account for the irradiation effects on SCC. General agreement is that a threshold neutron fluence level exists below which IASCC is not likely to occur. The best estimate of the threshold neutron fluence level[8] for stainless steel is ~5×10^{20} neutrons/cm^2 (E > 1 MeV). The expected lifetime neutron fluence levels for internals located in close proximity to the core, such as the core baffle, in-core monitor housings, and the core support plate, can exceed the threshold value, and such components are susceptible to IASCC.

One of the proposed theories suggested that the material may be weakened by the formation of bubbles in the solid caused by a transmutation process. Austenitic stainless steels contain trace quantities of boron and can react with thermal neutrons to form lithium and helium.[9] Hydrogen gases are also produced by transmutation reactions involving fast neutrons and elements such as nitrogen, nickel, iron, and chromium.[8] These insoluble gases precipate from the solid and have a tendency to migrate to dislocations or to grain boundaries.[9] Gas bubbles are discontinuities, and they can weaken the structural material. The solid may disintegrate if the bubbles are fused together, even when no significant stresses are acting on the system. Basic understandings on bubble sizes, their weakening effects, and the driving forces behind bubble movements are not complete.

The presence of impurities such as phosphorus (P) and silicone (Si) increases the susceptibility of unirradiated stainless steels to IGSCC. This seems to suggest that grain boundary segregation of impurities could be the responsible mechanism for IASCC. Therefore, high-purity stainless steels, with lower impurity contents, may be less susceptible to IASCC. However, there is not sufficient information to correlate grain boundary impurity concentrations with neutron fluence level and IASCC susceptibility. Testing results are inconclusive; some high-purity stainless steels are more resistant to IASCC under PWR operating conditions while others (including type 304) performed no better than commercial-grade stainless steels.

There is no agreement on the primary mechanism for IASCC, and there are many active research works in the field. It is generally accepted that IASCC would require the excedence of a threshold neutron fluence level. Also, the threshold tensile stress value for IASCC is much lower than the yield stress of the material. Stresses incurred during manufacturing and handling operations may be sufficient for the development of IASCC. It is also accepted that the critical flaw size decreases with increasing neutron fluence level. The reduction of the critical flaw size can accelerate crack growth rates.

The operating environment inside the pressure vessel of a PWR can produce conditions that are favorable to the development of SCC. SCC, in one form or another, is expected to be a major aging-related degradation mechanism for reactor internals.

4.1.2.2 Pitting

Pitting corrosion is a localized phenomenon. Holes or pits are etched into the metal surfaces and are filled with corrosion products. The pits are created by crevices or other fabrication flaws in the form of small cuts and nicks. They act as differential aeration cells in which the pit is an anode and the surrounding surface is a cathode.[1] The anodic reaction will create locally high concentrations of anionic species such as chlorides and sulfides in the pits. The corrosion process is the result of high concentrations of aggressive corrodents. Pitting can occur without the presence of significant stresses in the component. A stagnant condition will promote the growth of pitting corrosion.

Pitting is a concern for reactor internals when they are in storage during extended plant outages. Unless the reactor has a history of long outages, pitting is not considered as a primary aging-related degradation mechanism for reactor internals.

4.2 Fatigue

In addition to static loads, reactor internals are subjected to dynamic or time-dependent forces. A structure will undergo some form of vibratory motions as a response to dynamic loads. Vibrations can lead to crack initiation and

subsequent crack growth. Structural failures caused by vibrations are classified as fatigue failures. Fatigue failures are further divided into two types: low- and high-cycle fatigues. The determining factor is the number of vibration cycles that a component experienced before the development of a crack . The counting process begins with the onset of vibrations and is terminated with the initiation of a fatigue crack in the structure. There is not a precise dividing line separating low- and high-cycle fatigue failures. Generally speaking, when a crack is initiated between 10^3 and 10^4 cycles, the failure is considered as a low-cycle fatigue failure. Plastic strain accumulations are associated with low-cycle fatigue failures. High-cycle fatigue failures are characterized by large numbers of cycles and elastic stresses. There are usually little or no plastic strain accumulations in a high-cycle fatigue failure.

Fatigue failures are environment dependent. Understanding of the interactions between fatigue and environmental factors such as corrosion is limited. Most fatigue analyses are performed without inputs from environmental conditions. Fatigue design curves, such as those provided by the *ASME B&PV Code*,[10] are developed for dry air where the environmental corrosion effects are insignificant.

Some dynamic loads, such as those caused by hydraulic transients and seismic excitations, are treated as parts of the design loadings for the reactor system. Stresses, strains, and the dominant frequencies associated with the structural response to these events can be calculated, and their contributions are added to the fatigue life estimation for the affected components.

The primary cause of fatigue failures in reactor internals is flow-induced vibrations. The amplitude of the vibrations is determined by the amount of damping in the system as well as the closeness between the structural natural frequency and the dominant excitation frequency. When these frequencies are well separated, the amplitude of the vibrations is small. Large-amplitude resonant vibrations may develop when the input excitation frequency is close to the fundamental natural frequency of the structure. Damping can reduce the amplitude of such vibrations. The development of large-amplitude resonant vibrations in a reactor component will quickly lead to a low-cycle fatigue failure. When they are detected during reactor preoperational testings, corrective actions will be implemented to eliminate such large-amplitude vibrations. Therefore, in an aging assessment study, high-cycle fatigue failures caused by small-amplitude vibrations is the more important and relevant aging-related degradation mechanism.

4.3 Erosion

Erosion is the removal of materials from a metal surface when it is submerged in a moving fluid medium.[1] The process is best illustrated by the sandblasting operation in which a gas stream laden with fine solid particles literally grinds away a metal surface. Reactor cooling water is filtered, and the quantity of suspended solid particles in the flow stream is kept at a very low level (<1 ppm). Erosion caused by the actions of suspended solid particles is not expected to be a major aging-related degradation mechanism for PWR internals.

Cavitation can also cause erosion on a metal surface submerged in a liquid flow stream. In regions where the flow speed is high, the local static pressure may fall below the vapor pressure of the liquid, and a phase change takes place. Bubbles are formed and can become attached to the metal surface causing erosion problems. There is no phase change in the primary reactor coolant in normal PWR operations, and the flow speed in the core region is not sufficient to produce cavitations. Cavitation-induced erosion is not expected to be an aging issue for PWR internals.

4.4 Mechanical Wear

Mechanical wear is the loss of material as a result of relative motions between two contact surfaces. The presence of a corrosive medium may accelerate the material loss rate. Most mechanical wear problems in reactor internals are vibration-induced.

Mechanical wear can also develop in components that are held fixed initially. Examples are wears observed in flanges and bolted joints. Preloads are applied to these parts to prevent slippage between adjacent contact surfaces. Vibrations and creep can reduce the forces holding these parts together, and slippage can occur. The resulting relative motions can cause mechanical wear.

Mechanical wear can be minimized by hardening the contact surfaces or by the use of special wear pads. Periodic tightening of bolts in bolted joints can prevent mechanical wear caused by slippage.

4.5 Embrittlement

Embrittlement is the loss of ductility and fracture toughness in a material. It is usually accompanied by increases

in the material yield and ultimate strengths. The process can transform a normally ductile material to one that is susceptible to brittle fractures. Prolonged exposures to fast neutron fluxes and thermal aging can cause embrittlement in reactor components made of stainless steels.[1]

4.5.1 Radiation Embrittlement

Effects of radiation embrittlement are controlled by several parameters; the more important ones are neutron fluence, irradiation temperature, and material compositions. The experimental data base is obtained from testings using surveillance specimens from commercial power reactors and other test reactor experiments. Reductions in uniform elongations are used as indications of the decrease in ductility in the material after exposure to fast neutron fluxes. Changes in fracture toughness can be deduced from results of Charpy V-notch impact testings as well as other types of fracture-toughness testings.

At a temperature of ~316°C (600°F), testing results[11] with type 304 stainless steel indicate that the effects of radiation embrittlement are becoming noticeable at a neutron fluence level of $\sim 5 \times 10^{20}$ neutrons/cm^2. The estimated neutron fluence for reactor internals is determined by the distance of the component from the core. In 40 years of power operations, for those components located in close proximity to the core, the expected maximum neutron fluence[12] is $\sim 1 \times 10^{22}$ neutrons/cm^2. Such reactor internal components are susceptible to the effects of radiation embrittlement.

At specified neutron fluence levels and using annealed type 304 stainless steel, experimental results[13] showed that the material hardens and there is a corresponding decrease in ductility, as indicated by a reduction in uniform elongation. The experiments were conducted at temperatures ranging from room temperature to ~760°C (1400°F) and at neutron fluence levels (E > 1 MeV) up to 6×10^{21} neutrons/cm^2. At 299°C (570°F) the unirradiated uniform elongation has a value of ~38%. The uniform elongation at a neutron fluence level of 1.5×10^{20} neutrons/cm^2 is ~22% at the same temperature. At $\sim 1.5 \times 10^{21}$ neutrons/cm^2, the uniform elongation dropped to ~0.5%. The decrease seemed to level off at higher neutron fluence levels. Assuming these results are representative values for 304 stainless steels, it can be speculated that when the expected neutron fluence level does not exceed 1.5×10^{20} neutrons/cm^2, reactor internals should retain sufficient ductility that brittle fracture can be prevented. When the neutron fluence level for an internal component approaches the maximum value of 1×10^{22} neutrons/cm^2, the decrease in ductility would make a component susceptible to brittle fractures (reasonable combination of critical fracture toughness, stress, and flaw size). The core baffle, in-core instrumentation guide tubes, and possibly the core support plates are internal components that can experience neutron fluence levels close to the maximum value,[12] and they are vulnerable to radiation embrittlement effects.

4.5.2 Thermal Embrittlement

Thermal embrittlement is an aging-related degradation mechanism for reactor components made of cast austenitic stainless steels[14] (CASS). CASS is a two-phase alloy consisting of austenite and ferrite. The austenite is ductile, and its ductility is not affected by thermal exposure. The ferrite can become embrittled by thermal exposures, and its content is the controlling factor for thermal aging effects in CASS. When the ferrite content is <20%, the thermal embrittlement of CASS components is low.

When the ferrite content is >25%, CASS components can become embrittled when they are aged in the PWR operating temperature range of 280 to 320°C (535 to 610°F). Thermal-aging effects under these conditions can lead to a brittle cleavage fracture of the ferrite. Failures can also take the form of a separation of the ferrite/austenite phase boundary, which provides a convient crack propagation path. In either case, the fracture toughness of the material is reduced, and CASS components are susceptible to brittle fractures.

4.6 Creep and Stress Relaxation

Creep and stress relaxation[1] can cause a load-bearing structure to lose its structural integrity when it is exposed to high temperatures for an extended period of time. Exposures to fast neutron fluxes can lower the temperature in which creep and stress relaxation can become significant deformation mechanisms.

Creep is the progressive deformation of a structure under a constant internal stress. Stress relaxation is the reduction of internal stresses in a structure with a constant deformation. Creep and stress relaxation are caused by the same mechanism, but they differ in the constraints imposed on the structure. Creep can lead to brittle fractures in structural components that can undergo deformations. Stress relaxation is a concern for constrained structures such as bolted joints, where deformations are held fixed. The decrease in stresses in a bolted joint can cause the joint to lose its initial tightness, and leakage and slippage may occur. The development of creep and stress relaxation is influenced by the operating temperature and neutron fluence level.

Aging-Related

Creep and stress relaxation are considered as significant structural deformation mechanisms when the operating temperature is higher than half of the melting-point temperature of the material. The melting points for austenitic stainless steels are ~1427°C (2600°F). The normal operating temperature range for PWR internals is between 280 and 320°C (535 and 610°F), and it is much below 714°C (1300°F), which is half the melting-point temperature for stainless steels. The creep analysis temperature limit for austenitic stainless steels, as specified in the *ASME B&PV Code*, is 427°C (800°F). Creep analyses are not required for reactor components operating at the normal PWR operating temperature. When the neutron fluence level is low, thermally induced creep and stress relaxation are not considered as major aging-related degradation mechanisms for PWR internals.

In-pile experimental results at ~288°C (550°F) indicated that stress relaxation can occur in bolts made of type 304 stainless steels[1] at a neutron fluence level (E > 1 MeV) of $\sim 6 \times 10^{19}$ neutrons/cm^2. At the temperature range from 60 to 316°C (140 to 600°F), significant stress relaxation has been observed in type 304 stainless steels at neutron fluence levels $>5 \times 10^{20}$ neutrons/cm^2. The expected lifetime neutron fluence levels for reactor internals located near the core can exceed this value. The core baffle, in-core instrumentation guide tubes, and core support plates are susceptible to the aging effects of irradiation-assisted creep and stress relaxation.

4.7 PWR Internals and Potential Aging-Degradation Mechanisms

A reactor internal component is exposed to many stressors, and it is subjected to the effects of more than one aging-related degradation mechanism. Aging-related degradation mechanisms develop at different rates. In most cases, a dominant degradation mechanism emerges and would eventually cause a failure in the affected component. Actual operating conditions may favor the development of certain aging-related degradation mechanisms. As an example, it is well understood that impurity contents and tensile stresses have a strong influence in the development of SCC in stainless steel components. In PWR operating conditions, crevices are needed to trap high-impurity concentrations. Preloads in bolts can produce internal tensile stresses that are close to the yield stress of the bolt material. The combination of crevice conditions and high bolt tensile stresses indicates that PWR internals with bolted joints and other tight-fit connections are probable locations for the development of SCC.

The location of an internal component can have some influence in the development of a dominant aging-related degradation mechanism. A major stressor for reactor internals is flow-generated excitations, which may take the form of pump-generated pressure pulsations, vortex sheddings, and high-intensity turbulent flows. Pump-generated pressure pulsations are at their strongest level in regions around inlet nozzles. Reactor internals located in these regions, such as core support shields, thermal shields, surveillance specimen holder tubes, and core barrels, are susceptible to flow-induced pressure pulse excitations. As the coolant flow travels deeper into the core region, fluid damping and friction losses reduce the intensity of the pressure pulsations, and they would become less of a factor in exciting internal components.

Reactor internals located close to tube-bank-like structures, such as in-core instrumentation guide tubes and shrouds, are susceptible to the effects of cross-flow generated vortex sheddings. Flow-induced vibration is a major stressor for these components.

The effects of fast neutron fluxes are most pronounced in regions around the core. Reactor internals such as core baffle, core barrel, thermal shield, surveillance specimen holder tubes, core support plates, and in-core instrumentation guide tubes are susceptible to irradiation-assisted SCC and radiation-induced embrittlement.

Reported aging-related failure information for PWR internals is needed to assess the relative importance of the different aging-related degradation mechanisms associated with the many stressors that may exist inside a reactor pressure vessel.

Primary stressors and associated aging-related degradation mechanisms for PWR internals are summarized in Table 4.1.

Table 4.1 PWR internals primary stressors and aging-related degradation mechanisms

Stressor	Source	Aging-related degradation mechanisms
Oscillatory hydrodynamic forces (dynamic stresses)	Reactor coolant flow	Fatigue and mechanical wear
Preloads in bolts (static stresses)	External applied loads (torquing during installation)	Contributing factor to SCC[a]
Residual stresses (static stresses)	Welding	Contributing factor to SCC
Thermal stresses (static and dynamic)	Reactor coolant and gamma heating	Fatigue, contributing factor to SCC
Dissolved oxygen and other impurities	Reactor coolant	Contributing factor to SCC
Local concentration of corrodents	Crevice condition in reactor coolant flow	Contributing factor to SCC
Chromium depletion in grain boundaries (sensitization)	Welding	Enhance potential for SCC
High operating temperature [~316°C (600°F)]	Reactor coolant	Thermal embrittlement in CASS components
Exposure to fast neutron fluxes	Nuclear reaction in the core	Irradiation-assisted SCC and embrittlement, irradiation-enhanced creep and stress relaxation[b]

[a]SCC is most likely to occur as a result of high tensile stresses, local concentration of corrodents (crevices), and a susceptible material.
[b]Irradiation effects can make creep and stress relaxation major degradation mechanisms at reactor operating temperature [316°C (600°F)].

References

1. "Component Life Estimation: LWR Structural Materials Degradation Mechanisms," EPRI NP-5461, an interim report prepared by Structural Integrity Associates, Inc., for the Electric Power Research Institute, Palo Alto, Calif., September 1987.*

2. H. L. Logan, *The Stress Corrosion of Metals*, John Wiley & Sons, New York, 1966.

3. V. V. Romanov, "Stress Corrosion Cracking of Metals," the Israel Program for Scientific Translations and the National Science Foundation, Washington, D.C., 1961.

4. R. L. Cowan and C. S. Tedmon, "Intergranular Corrosion of Iron-Nickel-Chromium Alloys," *Advances in Corrosion Science and Technology*, Vol. 3, M. S. Fontana and R. W. Staehle, Eds., Plenum Press, New York, 1973.

5. M. E. Indig and A. R. McIlree, "High Temperature Electrochemical Studies of the Stress Corrosion of Type 304 Stainless Steel," *Corrosion* 35, 288 (1979).†

6. B. M. Gordon, "The Effects of Chloride and Oxygen on the Stress Corrosion Cracking of Stainless Steels: Review of Literature," *NACE* 36(8) (1980).†

7. "Degradation and Failure of Bolting in Nuclear Power Plants," Vol. 1, EPRI NP-5769, a final report prepared by Applied Science & Technology for the Electric Power Research Institute, Palo Alto, Calif., 1988.

8. A. J. Jacobs and G. P. Wozadlo, "Irradiation-Assisted Stress Corrosion Cracking as a Factor in Nuclear Power Plant Aging," *J. Materials Engineering* 9(4) (1988).†

9. J. Gittus, *Irradiation Effects In Crystalline Solids*, Applied Science Publishers, Ltd., London, 1978.

10. American Society of Mechanical Engineers, *ASME Boiler and Pressure Vessel Code*, Section III, Nuclear Power Plant Components, Div. 1.*

Aging-Related

11. R. E. Robbins, J. J. Holmes, and J. E. Irvin, "Post Irradiation Tensile Properties of Annealed and Cold-Worked AISI-304 Stainless Steel," *Trans. American Nuclear Society*, November 1967.†

12. V. S. Shah and P. E. MacDonald, Eds., "Residual Life Assessment of Major Light Water Reactor Components—Overview," USNRC Report NUREG/CR-4731, November 1989.*

13. O. K. Chopra and H. M. Chung, "Long-Term Aging of Cast Stainless Steel: Mechanisms and Resulting Properties," in *Proc. of the Fifteenth Water Reactor Safety Research Information Meeting, Gaithersburg, Md.*, USNRC Conference Proceeding NUREG/CR-0090, October 1987.*

14. O. K. Chopra, Argonne National Laboratory, "Estimation of Fracture Toughness of Cast Stainless Steels During Thermal Aging in LWR Systems," USNRC Report NUREG/CR-4513, June 1991.†

*Available for purchase from National Technical Information Service, Springfield, VA 22161.
†Available in public technical libraries.

5 Survey of Aging-Related Failures

Reactor internals are subjected to stressors that can activate many potential aging-related degradation mechanisms. Aging-related component failure information is needed to properly identify the more important aging-related degradation mechanisms. The identification of major aging-related degradation mechanisms may provide information that can be used to formulate strategies for controlling and managing aging effects.

The reactor component failure information is compiled from results of the plant in-service inspection (ISI) programs. The program specifies requirements and procedures for inspecting reactor systems or components to ensure safe plant operations. The requirements and procedures may include orders, rules, criteria, and guidelines established by regulatory or licensing agencies as well as industry standards developed by technical organizations. ISI programs for U.S. commercial nuclear power plants are established under the rules and regulations of Sect. XI of the *ASME Boiler and Pressure Vessel (B&PV) Code*.[1] The inspection of some reactor internals is included as a part of the plant ISI program.

5.1 ISI Program for Reactor Internals

The plant ISI program requires visual inspections for accessible areas of reactor internals. A complete inspection cycle is 10 years, and selected internal components are inspected at refueling outages.

Section XI of the *ASME B&PV Code* specifies three classes of visual inspections: VT-1, VT-2, and VT-3. A VT-1 visual examination is conducted to determine the condition of the part, component, or surface examined, including such conditions as cracks, wear, corrosion, erosion, or physical damage on the surface of the part or component. The examination can be performed either directly or remotely. A VT-2 examination is used to detect leakage from pressure-retaining components. Most reactor internals are not pressure-retaining components, and VT-2 inspections are seldom used on internals. A VT-3 examination is conducted to determine the general mechanical and structural conditions of components and their supports, such as verification of clearances, settings, physical displacements, loose or missing parts, debris, corrosion, wear, erosion, or the loss of integrity at bolted or welded connections. VT-3 inspections can be performed either directly or remotely.

During a refueling outage, some internal components are removed from the pressure vessel and stored in a pool. VT-3 examinations are performed on the accessible areas of these components by remote television cameras under proper lighting. Internals that remain in the pressure vessel are also inspected by remote television cameras. Note that the ISI plan only calls for the inspection of accessible areas of the internals. Details of the inspecting procedures can be found in Sect. XI of the *ASME B&PV Code*.

When a failure is detected, information concerning the failure such as its location and suspected causes is recorded. The information is sent to NRC for inclusion in the Licensee Event Report (LER). The LER may also contain information on corrective actions taken to repair the failure or damages. For these reasons, LERs are considered as reliable sources for reactor systems or components failure information.

5.2 Failure Information Summary

The majority of PWRs in the United States started commercial operations in the 1970s, and since that time there were many reported aging-related failures of reactor internals. Most of the reported failures can be attributed to three aging-related degradation mechanisms: (1) fatigue, (2) SCC, and (3) mechanical wear.

Most of the reported aging-related failure cases involved domestic PWRs. Many overseas PWRs of the Westinghouse design have experienced aging-related failures similar to those of the domestic units. However, the only overseas case discussed in details in this report is the SCC failures in core baffle bolts detected in some German and Swiss PWRs. This failure case is included because of its safety significance.

The following is a brief summary of the reported failure cases for each of the three major aging-related degradation mechanisms.

5.2.1 Fatigue

Most fatigue failures in PWR internals are caused by flow-induced vibrations (FIVs). Important excitation sources include pump-generated pressure pulsations, cross-flow vortex sheddings, and highly turbulent flows. There is usually a dominant frequency associated with these disturbances. Large-amplitude vibrations can develop when the structural natural frequency matches one of these excitation frequencies. The component will be subjected to small-amplitude vibrations when the frequencies are well separated.

5.2.1.1 WE Thermal Shield

The failure of thermal shields in older WE PWRs have been attributed to FIV.[2] Thermal shields are located near inlet nozzles and are subjected to pump-generated pressure pulsations. Most of these failed thermal shields were of the segmented-shell design with shell segments (usually three) keyed to support lugs at the bottom of the reactor vessel. The top end was either free or was equipped with radial spacer pins. The support condition can be characterized as a cantilevered support with limited displacements at the free end. The shell segments were fastened together by vertical pins at the intersections. Coolant flow-induced excitations caused the assembled shield to vibrate in a shell mode. During vibrations, some of the shell segments came into contact with the core barrel. In these older reactors, the core barrels were bolted together, and the repeated impact loadings caused failures in the core barrel support bolts. The impact loadings also damaged the thermal shield.

One of the reported failure cases involved a one-piece cylindrical thermal shield and occurred during the reactor functional hot testing. The shield was clamped to the core barrel at the bottom. The top was free except for the presence of radial limiter pins, which fit into a keyway in the core barrel. The pins were shrunk-fit into the thermal shield and lock welded in place by light fillet welds. FIV caused the pins to come into contact with the sides of the keyway in the core barrel, and repeated impacts eventually led to the cracking of the fillet welds that locked the pins to the thermal shield. After the failure was detected, the decision was made to replace the pin-keyway system by a flexure support system.

There was also one reported case of failure involving a one-piece cylindrical thermal shield with a flexure support system. The top-mounted flexure support system failed. The cause was attributed to high-cycle fatigue caused by small-amplitude FIV of the thermal shield.

There are no reported failures in thermal shields using the neutron-shield pad design.

5.2.1.2 CE Thermal Shield

CE thermal shields are located near inlet nozzles where effects of pump-generated pressure pulsations are strong. Two CE units equipped with thermal shields reported problems with their support system.[2] ISIs during refueling outages revealed missing support and positioning pins. All remaining pins showed signs of excessive wear or damage. Lugs welded to the core barrel to support the top end of the thermal shield were also damaged. In one unit the damaged lugs caused a through-the-wall crack in the core barrel. No damage to the reactor vessel was observed.

The damaged thermal shields were removed. Analysis indicated that removal of the thermal shield did not lead to any significant changes in the core thermal-hydraulic operating conditions. The removal of the thermal shields is not expected to have any undesirable effect on the reactors during their remaining design life.

5.2.1.3 CE Hold-Down Ring

During inspection of a maintenance outage, excessive mechanical wear was observed in the hold-down ring of a CE unit.[2] Failure was attributed to FIV caused by insufficient hold-down spring force. The hold-down ring was replaced. The new ring was fabricated with type 403 stainless steel instead of type 304, which was used to make the old hold-down ring. Additional hold-down spring force was applied during the installation of the new hold-down ring. The internal hold-down spring force was also increased for other CE reactors. There were no other reported hold-down ring problems.

5.2.1.4 WE Baffle Plate Water-Jetting

Fuel rod damage caused by baffle plate water-jetting has been reported in a number of WE reactors.[2,3] The core baffle outlines the boundary of the core. A bypass flow is established in the region between the core baffle and the core barrel, and it is used to provide more effective cooling to the core barrel. In some of the older WE reactors, the bypass flow is introduced into the region between the core baffle and the core barrel by holes located in the upper core barrel. The bypass flow moves in a downward direction through holes in the horizontal former plates, and it is turned around at the bottom of the core barrel and then merged with the main flow going through the core. When the bypass flow is in a downward direction, as illustrated in Fig. 5.1, the bypass flow pressure is higher than that of the main coolant flow in the core. A pressure differential is established between the bypass flow and the core, and it will push the coolant into the core if gaps exist between the vertical baffle plates. The jetlike leakage flow will impinge on fuel rods in the vicinity of the gaps and set the rods into whirling motions and vibrations. Excessive fuel rod motions will eventually lead to cladding degradations and failures.

Two types of baffle plate water-jet impingement patterns have been observed and are illustrated in Fig. 5.2. The jet from a center-injection joint impinges directly on a fuel rod, while that from a corner-injection joint will have a more sideways, impact. They can both set the affected fuel rods into vibrations and whirling motions.

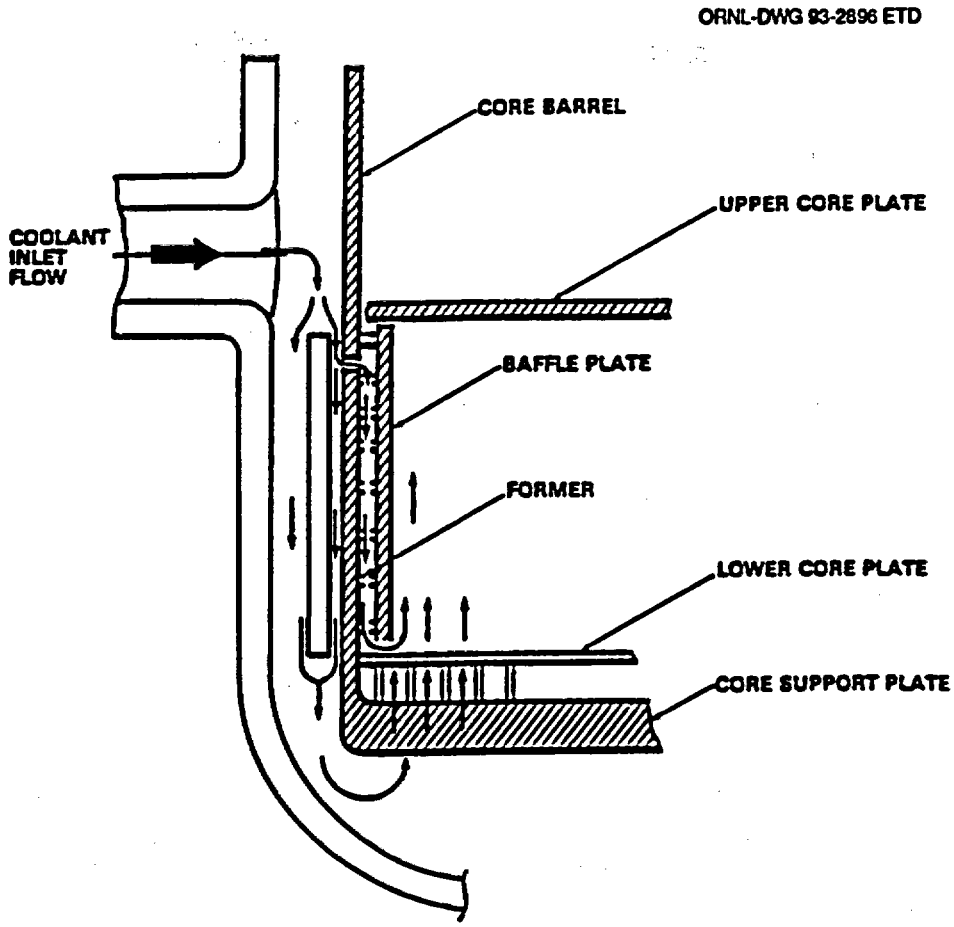

Figure 5.1 Westinghouse PWR downward bypass flow scheme

Several remedies have been tried to reduce the severity of the baffle plate water-jetting impingement problem. One remedy that has been tried is the peening of an entire joint to reduce the gap width between the vertical plates. Subsequent inspections revealed that peening the joints was not effective because damaged fuel rods were found around the peened joint. There was also evidence to suggest that peening a center-injection joint will have the effect of enlarging the gap width in nearby corner-injection joints. A more effective remedy is to replace the fuel rods in the water-jet impingement region with solid stainless steel rods of the same diameter. The insertion of partial grids, which will serve as midspan supports for fuel rods in the impingement region, has also been effective in reducing fuel rod damage. However, uses of solid stainless steel rods and partial grids are not considered as the permanent solution to the baffle plate water-jetting problems. A more effective solution is to reduce or eliminate the driving force behind the water-jetting flow.

The bypass flow rate is small when compared with the main coolant flow rate through the core, and the coolant pressure distribution in the core can be regarded as constant during normal reactor operations. The variable that can be changed to affect the pressure differential between the bypass flow region and the core is the pressure of the bypass flow. A decrease in the bypass flow pressure reduces the pressure differential and the driving force behind the water-jetting flow. The bypass flow pressure can be lowered by increasing the pressure loss in the main coolant flow before the diversion of a small portion of the main flow into the bypass flow region. This is accomplished by plugging the inlet holes near the top of the lower core barrel. The pressure in the bypass flow is reduced because of the added pressure loss in the flow down the annular downcomer region between the core barrel and the vessel wall. The bypass flow is then diverted into the core baffle–core barrel region through the lower core plate. In the modified flow scheme, the bypass flow is in an upward direction. Ideally, pressures in the core and the bypass flow region should be balanced, and there will be no driving force to produce jetting flow through gaps. In practice, a balanced pressure system is difficult to attain, and the severity of the water-jetting problem is reduced by lowering the pressure differential between the bypass flow and

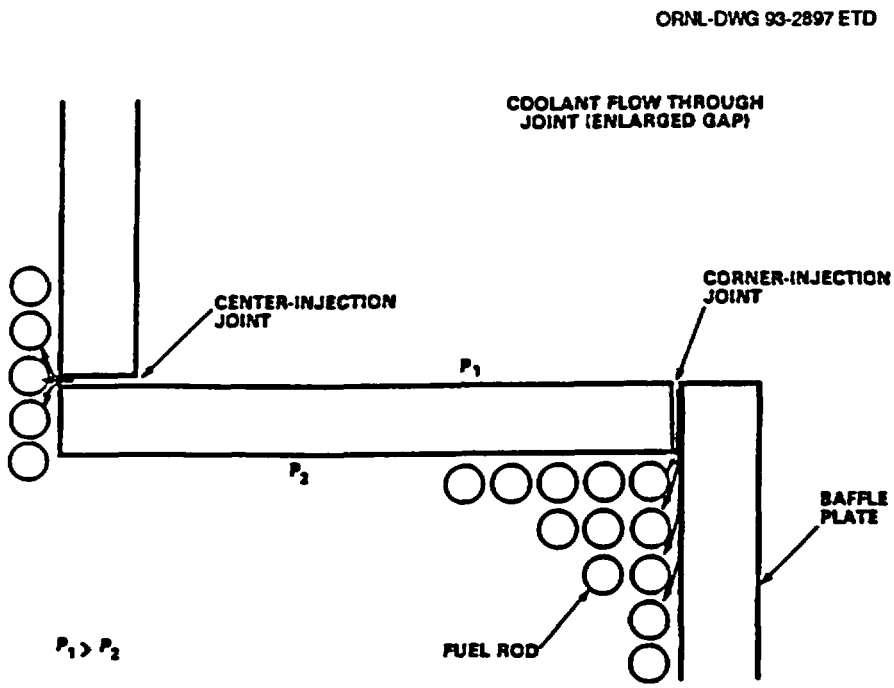

Figure 5.2 Westinghouse PWR baffle water-jet impingement patterns

the core. The effectiveness of the modified flow scheme can be further improved by designing the flow system in such a manner that the core flow pressure is higher than the bypass flow pressure. In this situation, potential water-jetting flows will be from the core into the bypass flow region and away from the fuel rods.

One WE unit that has a history of baffle plate water-jetting problems has modified its downward bypass flow scheme into an upward bypass flow scheme. Other plants with a downward bypass flow have also developed plans to convert to an upward bypass flow scheme.

In the new WE reactor design, the bypass flow enters the core baffle–core barrel region from the bottom region of the core barrel, and the bypass flow travels upward through holes in the horizontal former plates.

Discussions of the baffle plate water-jet impingement problem in WE reactors are based on information provided by NRC IE Information Notice No. 82-27.[3] There are no reported baffle plate water-jetting impingement problems in CE and B&W PWRs.

5.2.2 SCC

A crevice condition is a common feature in the development of SCC in PWR internals. Bolted joints and tightly fitted connections are likely sites for SCC attacks. Most observed SCC is intergranular. Internals with crevice conditions that are also exposed to high-energy neutron fluxes may also be susceptible to irradiation-assisted SCC.

5.2.2.1 B&W Thermal Shield Support Bolts

The B&W thermal shield is a cylindrical structure with its upper end bolted to the upper flange of the core barrel. The lower end of the shield is shrunk-fit into the upper flange of the forged cylinder in the lower grid assembly and secured by 96 high-strength bolts. B&W thermal shield support bolts were made of a nickel alloy stainless steel (grade A-286).

ISIs in several units revealed missing bolts from the thermal shield lower end support joint.[2] The majority (~80%) of the remaining bolts were loose, and several bolt locking cups were also missing. Cracks were also detected in bolts at the shield upper end and in the SSHT mounted on the outside wall of the thermal shield. The more serious failures were bolts at the lower end of the shield.

Failures were attributed to IGSCC at the bolt-head-to-bolt-shank transition. The replacement bolts were designed to reduce the tensile stress level in the bolt, and this was accomplished by redesigning the shank region, peening the surface of the bolt, and reducing the preload used to install the bolts. The material of construction also was changed from A-286 stainless steel to Inconel X-750.

A review of LERs did not show any reported failure of the new thermal shield support bolts.

5.2.2.2 B&W Core Barrel-to-Core Support Shield Bolts

The core barrel and core support shield are flanged cylindrical structures. The upper flange of the core support shield rests on a circumferential ledge of the vessel closure flange. The lower flange of the core support shield is bolted to the top flange of the core barrel. The bolts were made of a nickel alloy stainless steel (grade A-286).

Ultrasonic (UT) inspections in two B&W plants showed indications of cracking in a number of the bolts joining the core barrel to the core support shield. The results were verified when the bolt heads became separated from the bolt shanks when the locking clips were removed. Failures were attributed to IGSCC. Visual inspections failed to detect these failures.

The cracked bolts were replaced by bolts made of the same material, grade A-286 stainless steel. The new bolts were made by machining, while the old bolts were made by a hot-headed operation. The torque applied to the new bolts will be significantly reduced. A review of LERs showed no reported failure of the new core barrel-to-core support shield bolt.

5.2.2.3 WE Control Rod Guide Tube Support Pins

The guide tube assembly is a part of the upper core support structure, and it houses the control rod drive shaft and the RCCAs. The assembly is a tubular structure divided into two parts: the upper part, called the control rod shroud tube, and the lower part, the control rod guide tube. The upper support plate is the dividing boundary. The top of the control rod guide tube is fastened to the bottom of the upper support plate, and the lower end of the tube is held in place by split pins inserted into the lower core plate.

Several WE units had experienced steam generator failures caused by loose parts in the reactor primary cooling system. The loose parts were identified as parts from failed split pins in control rod guide tubes. The cause of the failures was identified as IGSCC.

The split pins are made from a nickel alloy (Inconel X-750) and are bolted to the bottom of the guide tube column. The support pins are then inserted into the upper core plate. The pins support the guide tube against hydrodynamic forces and also align the tubes with respect to the upper core plate and the fuel assemblies. A sketch of the guide tube support pin is shown in Fig. 5.3.

Crevice conditions are created when the pins are inserted into the upper core plate and the pins are exposed to a locally corrosive fluid medium. Improper heat treatment and overtorquing of the nuts during installation of the pins may have contributed to the development of IGSCC in the bottom region of the shank. As a remedy to the IGSCC problems, WE now recommends a solution heat treatment at a higher temperature, increasing the size of the pins, peening the nuts, and reducing the preloads during installation. The objective is to reduce the susceptibility of the material to the corrosive environment and to reduce tensile stresses that are necessary to the development of IGSCC.

ORNL-DWG 83-2898 ETD

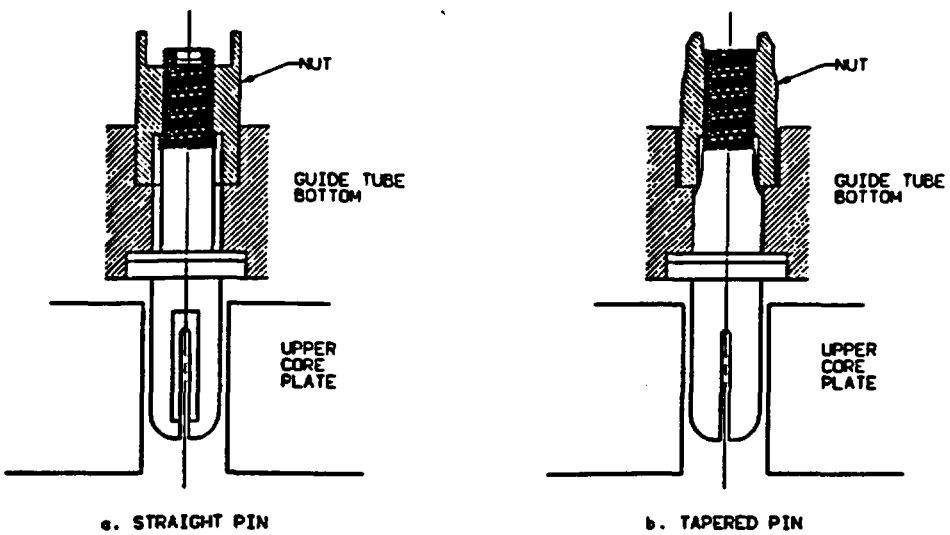

Figure 5.3 Westinghouse PWR guide tube support pins

The guide tube split pin IGSCC problems at PWR plants were addressed in a NRC IE Information Notice No. 82-29.[4] Many plants have initiated programs to replace the existing guide tube split pins with pins of the new design.

5.2.2.4 Core Baffle Bolt Failures in KWU-Built PWRs

The Kraftwerk Union (KWU) AG has built many PWR plants of the Westinghouse design in Germany and Switzerland. Five of these plants have reported SCC problems in the core baffle bolts.

The core baffle maintains the geometry of the fuel assemblies and controls the coolant flow through the core. It is a bolted structure composed of horizontal former plates and vertical baffle plates. The outer edges of the former plates are bolted to the inside of the core barrel, and vertical baffle plates are bolted to inner edges of the former plates. In reactors built by KWU before 1979, the core baffle bolts were made of a nickel-alloy (Inconel X750). After they were installed, the bolts were secured by tack welds. After 1979, the core baffle is a welded structure in KWU-built units. A simplified view of the core baffle and its bolting scheme are shown in Fig. 5.4.

Routine UT inspections detected signs of cracks in core baffle bolts in five KWU-built PWRs. A typical bolt failure pattern is shown in Fig. 5.5. The problem was first reported in 1987.[5] Failures were attributed to IGSCC. The suspected cause was the sensitization of the nickel-alloy bolts by the welding process, coupled with crevice conditions and high tensile stresses in the bolts.

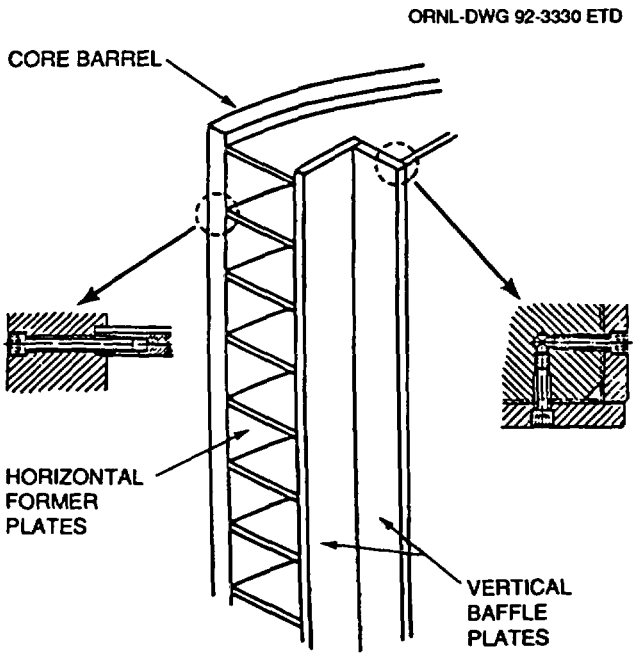

Figure 5.4 KWU-built PWR core baffle and bolting scheme

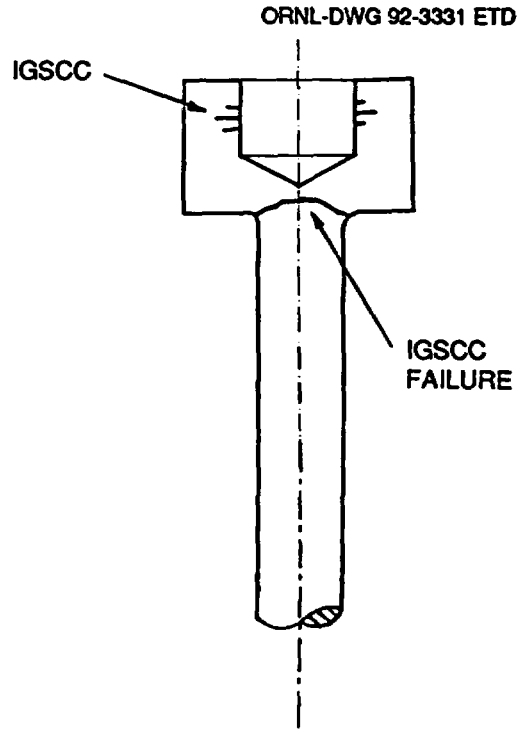

Figure 5.5 KWU-built PWR core baffle bolt failures

The nickel-alloy bolts were replaced by 1.4571 austenitic steel bolts, and the replacement bolts were secured by a mechanical scheme. There is no reported failure of the replacement core baffle bolts.

The core baffle in domestic WE PWRs is a bolted structure. The bolts are made of type 316 stainless steel. A search of the LER data base did not locate any reported failure of the core baffle bolts in U.S. reactors.

5.2.3 Mechanical Wear

The primary cause of mechanical wear in reactor internals is FIV. Parts that are in close proximity to each other may come into contact during vibrations, and the rubbing would lead to excessive thinning of the contact areas. Bolted joints, in-core instrument lines protected by tightly fitted shields, and guide tubes are probable sites for mechanical wear problems.

5.2.3.1 WE Reactor Flux Thimble and Guide Tube Thinning

In-core neutron monitors, which are parts of the reactor flux-mapping system, are located inside retractable thimble

tubes. The thimble tubes extend from selected locations inside the core, through the bottom of the pressure vessel, high-pressure conduits, and seal tables to a ten-path transfer device. The thimble tubes, in turn, are supported by guide tubes in the lower region of the reactor pressure vessel. The guide tube is divided into two parts: the upper part, located inside the fuel assembly, and the lower part, extending from lower core plate to the reactor vessel bottom. The portion of the thimble tube between the fuel assembly and the lower core plate is unprotected and exposed to reactor coolant flows. The thimble tubes are susceptible to FIV in the unshielded region. Contacts between thimble tubes and guide tubes can lead to mechanical wear problems in both structures. A sketch of the flux thimble and guide tube arrangement is shown in Fig. 2.7.

Excessive thimble and guide tube thinnings and leakages were reported in a U.S. reactor in 1981.[6] Fretting-induced failures of guide tubes have been reported in foreign WE units. The consequence of a thimble tube leakage is serious because it can result in a breach of the reactor coolant primary pressure boundary. The thimble tubes are opened at the ten-path transfer device for the insertion of the neutron monitor, and the development of tube leakages could result in a nonisolable coolant leak.

Tube thinnings were detected by the eddy-current inspection method. When tube thinning is detected, the current remedy is to retract the thinned segments to move them away from the vibrating region. Thicker-walled tubes also have been used. Tubes that were seriously degraded will be removed from service by closing the isolation valves. Many utilities have instituted inspection programs to monitor thimble-tube thinnings. At the present time there is no permanent solution to the thimble-tube thinning problems.

Flux thimble and guide-tube thinning problems are discussed in IE Information Notice No. 87-44.[6]

5.2.3.2 B&W SSHTs

Excessive wear was detected in SSHTs in B&W units in the mid-1970.[1] The tubes were mounted on the outside surface of the thermal shield and exposed to pump-generated pressure pulsations. The failure was considered as generic in nature and was attributed to FIV. The tubes were modified so they would be less sensitive to the pressure excitations; this was accomplished by changing the stiffness of the tube and/or adding additional structural supports. No problems have been reported since the corrective measures were implemented.

5.3 Failure Information Survey Results

More specific information will be provided on major internal component failures. In addition to the major aging-related degradation mechanisms, the total number of reactors reporting the failure and their unit age will also be identified. The unit age of a reactor is measured in commercial operation years, which is the difference between the commercial starting date and the event date of the first LER on the reported failure. Unit age is a parameter that can be used to represent the age of the reactor when the first failure occurred. Corrective actions taken will also be included in the survey results. LERs from 1980 to 1990 provide the bulk of the failure information. Useful information was also obtained from EPRI reports on nuclear unit operating experiences.

5.3.1 WE Internals

5.3.1.1 Thermal Shield Support Bolts

Major aging-related degradation mechanisms: bolt failures caused by fatigue. Pump-generated pressure pulsations and oscillatory hydrodynamic forces are the primary stressors.

Number of units reporting failure: 6, mostly early reactors with the old thermal shield design.

Unit age at first failure: not known for four units. Of the remaining two units, one reported thermal shield support bolt failures after 12 years, and the other unit after 21 years of commercial operation.

Corrective actions: The pin-keyway support system was replaced by a flexure shield support system. New reactor design replaces thermal shields with neutron shield pads attached directly to the core barrel.

5.3.1.2 Baffle Plate Water-Jetting

Major aging-related degradation mechanisms: High-cycle fatigue. Baffle plate gaps enlarged by FIV. Fuel rods damaged by vibrations caused by high-intensity turbulent flows through gaps.

Number of units reporting failure: 6

Unit age at first failure: 4, 5, 5, 6, 13, and 20 years.

Corrective actions: Several remedies have been tried with varying degrees of success, including peening the baffle plate joints, replacing fuel rods in the impingement areas with solid stainless steel rods, and using partial grids for

additional supports to the fuel rods. One unit has converted the downward bypass flow into an upward bypass flow in the core baffle-core barrel region. New reactors use the upward bypass flow scheme.

5.3.1.3 Control Rod Guide Tube Support Pins

Major aging-related degradation mechanisms: IGSCC caused by crevice conditions, improper heat treatment, and overtorquing of the split pin nuts.

Number of units reporting failures: 5

Unit age at first failure: 4, 7, 7, 8, and 14 years.

Corrective actions: Heat treatment at a higher temperature. New split pins are larger in size. The nuts are peened and installed with a reduced torque.

5.3.1.4 In-Core Thimble and Guide Tube Thinning

Major aging-related degradation mechanisms: mechanical wear caused by contacts with flux thimbles and adjacent guide tubes. Motions induced by FIV of the unshielded portion of the thimble between the fuel assembly and lower core plate.

Number of units reporting failure: 5

Unit age at first failure: 4, 4, 8, 11, and 17 years

Corrective actions: Tube sections with excessive mechanical wears are retracted and moved away from the vibrating regions, and thicker-walled tubes are used. There is no permanent solution at the present time. Utilities have set up inspection programs to monitor thimble-tube thinnings.

5.3.1.5 Core Baffle Bolts in KWU-Built Units

Major aging-related degradation mechanisms: IGSCC caused by welding-induced sensitization of nickel-alloy bolts, coupled with crevice condition and high bolt tensile stresses.

Number of units reporting failure: 5

Unit age at first failure: Not known.

Corrective actions: Nickel-alloy bolts were replaced by austenitic steel bolts. Replacement bolts are secured by a mechanical means instead of tack welds.

Table 5.1 is a summary of the reported component failure information on WE reactor internals.

Table 5.1 Summary of WE internals failure infomation

Component	Failure description	Aging-related degradation mechanisms
Thermal shield support bolts	Cracked bolts	Fatigue
Core baffle plate	Enlarged gaps between baffle plates	Fatigue
Flux thimbles and guide tubes	Excessive thinning	Mechanical wear
Control rod guide tube support pins	Cracked pins	Crevice-assisted SCC
Core baffle bolts	Cracked bolts	Crevice-assisted SCC

5.3.2 B&W Internals

5.3.2.1 Thermal Shield Support Bolts

Major aging-related degradation mechanisms: bolting failure caused by crevice-assisted IGSCC.

Number of plants reporting failure: 7

Unit age at first failure: 6, 7, and 5 units at 8 years

Corrective actions: using replacement bolts that feature new bolt design with reduced stresses in the shank region, peening the bolts to reduce surface tensile stresses, reducing the torque used in the installation of the bolts, and using Inconel X-750 instead of A-286 stainless steel as the material of construction.

5.3.2.2 Core Barrel-to-Core Support Shield Bolts

Major aging-related degradation mechanisms: crevice-assisted IGSCC.

Number of plants reporting failure: 2

Unit age at first failure: 7 and 8 years

Corrective actions: Replacement bolts are made with the same material, grade A-286 stainless steel. New bolts were machined, while old bolts were made by a hot-headed operation. The torque applied to the new bolts is also significantly reduced.

5.3.2.3 SSHT

Major aging-related degradation mechanisms: mechanical wear caused by FIV.

Number of plants reporting failure: 6

Unit age at first failure: 1, 2, 2, 2, 2, and 3 years

Corrective actions: New SSHTs are structurally detuned to flow-induced excitations; this is accomplished by changing the stiffness of the tube and adding new supports.

5.3.2.4 SHHT Bolts

Major aging-related degradation mechanisms: bolting failure caused by crevice-assisted IGSCC.

Number of plants reporting failure: 1

Unit age at first failure: 6 years

Corrective actions: SSHT bolts were replaced with stud and nut fasteners made of Inconel X-750.

Table 5.2 is a summary of the reported component failure information on B&W reactor internals.

5.3.3 CE Internals

5.3.3.1 Thermal Shield Support Bolts

Major aging-related degradation mechanisms: high-cycle fatigue bolt failures caused by FIV.

Number of plants reporting failure: 2

Unit age at first failure: 7 and 8 years

Corrective actions: Thermal shields and support lugs were removed from reactors.

Table 5.2 Summary of B&W internals failure infomation

Component	Failure description	Aging-related degradation mechanisms
Thermal shield support bolts	Cracked bolts	Crevice-assisted SCC
Core barrel to core support shield bolts	Cracked bolts	Crevice-assisted SCC
SSHT	Excessive thinning	Mechanical wear
SSHT bolts	Cracked bolts	Crevice-assisted SCC

5.3.3.2 Core Support Barrel

Major aging-related degradation mechanisms: fatigue caused by FIV. Failure of thermal shield support pins led to increased loadings on the core barrel support lugs, and a through-the-wall crack was detected at two lug locations.

Number of plants reporting failure: 1

Unit age at first failure: 8 years

Corrective actions: The through-the-wall crack was arrested by drilling a hole at each end of the crack. The core support barrel was put back into service.

5.3.3.3 Core Internal Hold-Down Ring

Major aging-related degradation mechanisms: mechanical wear caused by FIV. FIV was attributed to insufficient hold-down spring force.

Number of plants reporting failure: 1

Unit age at first failure: 2 years

Corrective actions: New hold-down ring made of type 403 stainless steel was installed with an increased internal hold-down spring force. No new failures were reported.

Table 5.3 is a summary of the reported component failure information on CE reactor internals.

Table 5.3 Summary of CE internals failure infomation

Component	Failure description	Aging-related degradation mechanisms
Thermal shield support bolts	Cracked bolts	Fatigue
Core support barrel	Through-the-wall crack	Fatigue
Hold-down ring	Excessive wear	Mechanical wear

References

1. *American Society of Mechanical Engineers, ASME Boiler and Pressure Vessel Code*, Section XI, Rules for Inservice Inspection of Nuclear Power Plant Components.*

2. "Characterization of the Performance of Major LWR Components," EPRI NP-5001, a final report prepared

by the S. M. Stoller Corp., for the Electric Power Research Institute, Palo Alto, Calif., 1987.

3. "Fuel Rod Degradation Resulting from Baffle Water-Jet Impingements," IE Information Notice No. 82-27, USNRC Office of Inspection and Enforcement, Washington, D.C., August 1982.

4. "Control Rod Drive (CRD) Guide Tube Support Pin Failures at Westinghouse Plants," IE Information Notice No. 82-29, USNRC Office of Inspection and Enforcement, Washington, D.C., 1982.

5. *Nucleonics Week* 28(10),1–3 (March 5, 1987), a McGraw-Hill publication.†

6. "Thimble Tube Thinning In Westinghouse Reactors," IE Information Notice No. 87-44, USNRC Office of Inspection and Enforcement, Washington, D.C., September, 1987.

*Available from the National Standards Institute, 1430 Broadway, New York, NY 10018, copyrighted.
†Available in public technical libraries.

6 ISI and Monitoring Programs

The ISI program stipulates visual inspections for reactor internals during refueling outages. Visual inspections, while relatively simple to perform, have obvious limitations. They are used mainly to detect surface flaws in accessible areas of a component. Visual examinations are not effective in detecting subsurface or partial through-the-wall cracks and cannot detect failures in inaccessible areas. Alternate methods have been tried, on an experimental basis, to improve the effectiveness of detecting failures in reactor internals. UT inspections have been used with some success in detecting cracks in bolts and in areas that are not accessible to visual inspections. However, UT inspections also have limitations and access problems. In addition, the interpretations of UT examination results are much more complicated and difficult than those for visual inspections. The eddy-current method is another inspection method that has potential applications in examining reactor internals. It has been used to inspect long tubular structures for excessive wall thinnings. The establishment of an effective inspection program for reactor components is an evolving process. When a new inspection method has been used successfully, the responsible organization will issue bulletins and letters to inform plant operators of the latest developments and their potential applications to reactor component inspection programs.

A major concern in reactor operations is the presence of loose parts in the reactor primary coolant system. Reactor operation is disrupted when loose parts are lodged in critical locations such as inlets to pumps and heat exchangers. Loose parts were generated in some of the reported aging-related failures. Although none of these incidents had endangered the safety of reactor operation, the possibility cannot be ruled out in future occurrences. In addition to safety considerations, these failures have resulted in economic losses caused by extensive outages for repair work. For these reasons, NRC and plant operators are interested in the development of inspection and monitoring methods that can be used to detect failures in reactor components. Research and development work to detect loose parts[1] has led to the issuance of NRC Regulatory Guide 1.133,[2] which outlines the operating requirements for loose part monitoring systems (LPMS) in U.S. commercial nuclear power plants. LPMSs are required for reactors licensed since 1978. Many plants licensed before 1978 have installed LPMS on a voluntary basis.

There is also a considerable amount of research and development work in the areas of preventive maintenance methods for reactor components. An effective preventive-maintenance program can enhance the safety and efficiency of plant operations. Vibration monitoring and trending studies of key reactor components can provide the basic information needed for the decision-making process in an effective preventive-maintenance program. These studies are used extensively in ISI programs for French and German reactors.[3] They have been used on an experimental basis in domestic reactors, but vibration monitoring and trending studies have currently not been formally incorporated into U.S. plant ISI programs. Some individual plants are required to make vibration measurements periodically as a condition of their operating Technical Specifications.

6.1 LPMS

The LPMS is an in-service detection system designed to indicate the presence of loose metallic parts in the reactor primary system. The system can provide diagnostic information to the plant operator concerning abnormal conditions in the reactor so that appropriate actions can be taken to ensure safety in plant operations. Early warnings can also minimize the risks to other reactor components and systems.

The collision of a loose part, carried along by the reactor coolant flow, with a stationary reactor component will generate sound waves, primarily bending waves, which will propagate to other structural components. The effectiveness of an LPMS will depend on the system's capability to detect, capture, and interpret these structure-borne sound waves.

A typical LPMS consists of a series of sensors (piezoelectric accelerometers) mounted on the outside of the reactor pressure vessel and steam generators to detect collision-generated structure-borne bending waves. A ring of three sensors is mounted around the top and the bottom of a PWR pressure vessel. Two sensors, separated by at least 3 ft typically, are recommended at the primary inlet tube-sheet for steam generators. Inputs from these sensors are amplified and then fed to a monitor that records and analyzes the signals. When interpreted properly, loose parts collision signals can provide information on the mass and energy of the moving object as well the impact location. The input signals contain information that can be used to evaluate the dominant frequency and amplitude of the structure-borne sound waves detected at the sensor locations. Differences in arrival time at the various locations can also be determined. Using the dominant frequency and the amplitude of the structure-borne sound waves and a predetermined calibration curve, the mass and energy of the loose part are estimated. The location of the impact point can be determined by using differences in arrival

time at the various sensors and a triangulation process. Many uncertainties are associated with the signal processing procedures. In general, the uncertainty level is low when the loose part is small, and the sound wave propagation path is simple and straightforward. The uncertainty increases with the size of the loose part and the complexity of the sound wave propagation path. More detailed information on LPMSs can be found in reports by Kryter[1] and Mayo.[4]

The performance of LPMS is mixed. This is not unexpected because of the complexity and difficulties in interpreting the structure-borne sound waves generated in a collision process. EPRI has conducted a research project with the goal of improving the performance of LPMSs. Key results and recommendations of the project can be found in an article by Weiss and Mayo.[5]

Note that a LPMS is not considered as a safety-related system. LPMSs can provide signals indicating the presence of loose parts in the reactor primary system. These signals, when properly processed and analyzed, can lead to actions that could minimize damages to other reactor components and systems. Minimizing the damage in a loose-part incident would reduce the outage time for repair work. When viewed in this manner, the incentive of improving the performance of LPMSs is economic.

6.2 Vibration Monitoring and Trending Studies

The safety of reactor operations and plant availability can be improved with a monitoring system that can detect system degradations at an early stage so that failures or malfunctions can be effectively prevented. Vibration monitoring and trending studies, which are common practices in preventive maintenance programs for rotating machineries, have potential applications in reactor inspection and maintenance programs.

The hostile environment inside a reactor vessel would preclude the use of sensors attached directly to internal components for long-term vibration measurements. Instead, vibrations of selected reactor internal components can be inferred from neutron noises measured by ex-core detectors. Neutron noises are fluctuations in the neutron flux around a mean value. The neutron flux is moderated by the water layer between the core and the pressure vessel. Vibrations of some reactor internals (e.g., the core barrel) can change the thickness distribution of the water layer surrounding the core. Changes in the water layer thickness lead to variations in the moderating effects and can be correlated to neutron noises as measured by ex-core detectors. Ex-core neutron noise measurement is considered an effective method for studying vibrations in reactor internals such as core barrels and thermal shields. For more information on the theory and application of neutron noise analysis for reactor diagnosis, consult Ref. 6.

Results of an ex-core neutron noise analysis at a given power level and a known sensor location are usually presented in the form of a noise spectrum, which is a plot of the normalized power spectral density (NPSD) curve over a specified frequency range. The ability to correctly associate characteristic features or spikes on the noise spectrum with natural frequencies of reactor components is essential to the success of the method. The structural frequency identification process can be accomplished by correlating in-core and ex-core vibration measurements during preoperational vibration testing or by analytical modeling. Temporary in-core sensors are often used during reactor preoperational testing and can provide information on the structural natural frequencies of major reactor internals. Neutron noise analysis is of limited value for reactor components whose natural frequencies do not form identifiable features or spikes on the noise spectrum.

When the component natural frequencies are clearly identified on a noise spectrum, trending studies can be performed with noise spectrums at different time intervals. Typically, three to five measurements are made in one fuel cycle. Deviations of an identifiable point in an actual noise spectrum from that of a reference spectrum can be interpreted as indications of degradations in the component. The process will require the establishment of a detailed and accurate reference noise spectrum for a specific reactor. The reference noise spectrum may be obtained from results of preoperational vibration testings. The ability to correlate deviations in the noise spectrum with the severity of a system degradation is the key to the success of trending studies. The establishment of a knowledge-based expert system on normal and abnormal behaviors of reactor components can aid in the decision-making process.

Neutron noise analysis can be used on many reactor components and systems including reactor internals. One of the successful applications of the method is the vibration assessments of core barrels in PWRs.[7] The core barrel is specially suited for neutron noise analysis because of its size and the effects of its vibrations on the distributions of the water layer thickness between the core and the vessel wall. The vibrational characteristics of the core barrel are also well understood. Inspections of the core barrel during refueling outages confirmed the general correctness of the neutron noise analysis results. There is practically no published information on the results of trending studies on reactor internals in U.S. reactors. One of the reasons could be because results of vibration monitoring and trending

studies may contain information that is considered as proprietary in nature by reactor vendors and plant operators. Proprietary information is not published in the open literature.

Vibration monitoring and trending studies have been incorporated into ISI programs for French and German reactors. They have been used on an experimental basis in many domestic plants. The ASME Operation and Maintenance (OM) Committee is currently studying the possibility of requiring in-service vibration monitoring for PWR internals.

References

1. R. C. Kryter et al.,"Loose Parts Monitoring: Present Status of the Technology, Its Implementation in U.S. Reactors and Some Recommendations for Achieving Improved Performance," *Progress in Nuclear Energy* 1(2–4), (1977).*

2. "Loose Parts Detection Program for the Primary System of Light-Water Cooled Reactors," *USNRC Regulatory Guide 1.133*, Washington, D.C., May 1981.

3. D. Wach, "Vibration, Neutron Noise and Acoustic Monitoring in German LWRs," *Nucl. Eng. and Des.* 129 (1991).*

4. C. W. Mayo, "Loose Part Signal Theory," *Progress in Nuclear Energy* 15 (1985).*

5. J. M. Weiss and C. W. Mayo, "Recommendations for Effective Loose Part Monitoring," *Nucl. Eng. and Des.* 129 (1991).*

6. J. A. Thie, "Power Reactor Noise," American Nuclear Society, 1981.

7. D. N. Fry, J. March-Leuba, and F. J. Sweeney, Union Carbide Corp. Nucl. Div., Oak Ridge Natl. Lab., "Use of Neutron Noise for Diagnosis of In-Vessel Anomalies in Light-Water Reactors," USNRC Report NUREG/CR-3303 (ORNL/TM-8774), January 1984.†

*Available in public technical libraries.
†Available for purchase from National Technical Information Service, Springfield VA 22161.

7 Discussion and Conclusions

Reactor internals operate inside the pressure vessel and are subjected to many environmental as well as physical stressors. Primary stressors for PWR internals are related to the reactor primary coolant flow and exposures to fast neutron fluxes (E > 1 MeV). Stressors can initiate and sustain the growth of aging-related degradation mechanisms.

Aging-related degradation mechanisms develop at different rates, and conditions inside the pressure vessel may favor the development of selected dominant mechanisms in internal components. Fatigue, SCC, and mechanical wear are the major aging-related degradation mechanisms for PWR internals. They are identified based on a review of reactor operating histories and reported component-failure information.

Flow-induced cyclic hydrodynamic loads are important stressors for PWR internals. These loadings include pump-generated pressure pulsations, vortex-shedding oscillatory forces and high-intensity turbulent flows. These cyclic loads can excite internal components into vibrations. When they are not properly mitigated, FIV can lead to fatigue and mechanical failures.

Because of its low dissolved oxygen content, the water chemistry of a PWR is not favorable to the development of SCC in the bulk of the reactor cooling system. However, narrow gaps and other small regions in some internal components can trap a stagnant fluid medium with locally high concentrations of corrodents. These crevices create a corrosive environment and can cause SCC when tensile stresses are also present in the system. Preloads in bolts can generate tensile stresses needed for the development of SCC. Crevice-assisted SCC is found in bolted joints and other tightly fitted connections in reactor internals.

Long-term exposure to fast neutron fluxes is a stressor that can lead to embrittlement and radiation-assisted SCC. A basic understanding of these potential aging degradation mechanisms has not yet been achieved. There are many active research works whose main goal is to increase the understanding of neutron irradiation effects on the aging of reactor components.

When they are not mitigated, aging effects will eventually lead to a failure in the affected components. Understanding the stressors associated with these aging degradation mechanisms can lead to the establishment of effective programs to control and manage these aging effects.

7.1 FIV

PWR internal components have failed as a result of FIV. Fatigue and mechanical wear are the two important failure mechanisms. FIV problems are generally resolved by eliminating the excitation sources or by changing the vibrational characteristics of the affected structural components. The practical choice for most reactor internals is the second option where the component is detuned from the external excitations.

Some of the FIV problems were detected very early in reactor operations and can be regarded as a part of the reactor "debugging" process. Excessive mechanical wear observed in CE reactor internal hold-down rings is an example of a problem of this nature. The problem was resolved by installing a new hold-down ring and increasing the hold-down force during installation. The SSHT in B&W units is another successful example of detuning the structure from input excitations.

Other FIV problems are more difficult to resolve. Thermal shields in many early CE and WE units have encountered FIV problems. Fatigue cracks in support bolts were the most common reported failure. Detuning the shields by increasing the stiffness of the support systems did not prove to be effective in minimizing the effects of flow-induced excitations. Thermal shields had been removed from some CE units. Neutron-shield pads, instead of thermal shields, are now used in the new WE reactors. However, the removal of the thermal shield without an effective replacement may increase the neutron fluence at the wall of the reactor pressure vessel and adversely affect its long-term structural integrity. It should be noted that analysis results indicated that removal of the thermal shields from the CE reactors will have no undesirable effect in the remaining design life of the affected reactors.

A more recent FIV-related problem is the excess mechanical wear observed in flux thimbles and thimble guide tubes in WE units. The problem has been traced to FIV in the unshielded portion of the thimble between the fuel assembly and the lower core plate. The current practice is to retract the thinned thimble sections away from the vibrating region. No permanent solution has been proposed, and the flux thimble and guide tube thinning problem is still under active investigation.

Discussion

The baffle plate water-jetting problem observed in several WE units is an example in which the coolant flow field was modified to eliminate flow-generated excitations. The driving force behind the jetting problem was eliminated by changing a downward bypass flow to an upward bypass flow in the core baffle-core barrel region. New WE reactors use the upward bypass flow scheme.

Most of the serious FIV problems in PWR internals have been resolved by well-established engineering practices. Flow-induced mechanical wear in flux thimble and guide tubes is an unresolved problem. Many plants have initiated inspection programs to keep track of the thimble and guide tube thinning problems.

Due to the relatively high flow speed and high-intensity turbulence level in the reactor coolant flow, it is not possible to eliminate all FIVs in PWR internals. Some internal components are subjected to small-amplitude vibrations during reactor operations. They may be susceptible to high-cycle fatigue failures. The effects of a corrosive environment on high-cycle fatigue failures are not well understood. Research results in this area have not reached the state that they can be incorporated into design codes such as the *ASME B&PV Code*. High-cycle fatigue may become a more important factor in determining the useful working life for reactor internals.

7.2 SCC

Most SCCs in PWR internals were detected in bolted joints and tightly fitted connections. Crevice conditions at these locations create a highly localized corrosive environment that is conducive to the development of SCC. The use of molybdenum disulfide (MoS_2) as a thread lubricant can contribute to the corrosiveness of the crevice condition. The susceptibility of the material and the corrosiveness of the cooling fluid are not sufficient to cause SCC. Preloads in bolts and the tensile stresses that they generate are also needed for the development of SCC.

Failures have been detected in thermal shield support bolts in B&W units and in control rod guide tube split pins of WE reactors. The B&W thermal shield support bolts were made of A-286 stainless steel, and the split pins are made of Inconel X-750 alloy. The responsible aging degradation mechanism is SCC, specifically IGSCC. Improper heat treatment of the split pins may have also contributed to the corrosion problems in guide tube split pins.

A two-prong approach has been taken to resolve SCC problems in PWR internals. The first approach is to reduce the susceptibility of the material, and the second is to decrease the tensile stress level in the component. The material of construction for support bolts in the B&W thermal shield was changed from A-286 stainless steel to Inconel X-750 alloy. A higher temperature is now used for the heat treatment of WE guide tube split pins. In both cases the size of the bolt shank region was enlarged, and preloads were reduced during installation. These design and fabrication changes should lower the tensile stresses below the threshold level in the bolts. Together with the use of less susceptible materials, they should provide adequate protection against IGSCC problems in support bolts.

7.3 Other Potential Aging-Related Degradation Mechanisms

Aging-related degradation mechanisms develop at different rates, and, in addition to the three identified major degradation mechanisms, other aging mechanisms may emerge in future reactor operations.

Neutron irradiation effects may manifest themselves in the forms of embrittlement and IASCC. The expected lifetime neutron fluence level for some reactor internals can attain the value in which neutron irradiation effects are important. This is of special concern to components in the immediate vicinity of the core, such as the core baffle, in-core instrumentation guide tubes, and possibly the core support plates. The existence of crevice conditions, bolt preloads, and exposure to fast neutron fluxes would make the core baffle a prime candidate for embrittlement and IASCC.

The exposure to fast neutron fluxes may also lower the temperature at which creep and stress relaxation can become important aging-related degradation mechanisms for reactor internals. At the PWR, the normal operating temperature ranges between 288 and 316°C; the best estimate for the threshold neutron fluence level for creep and stress relaxation in stainless steels is about 6×10^{19} (neutrons/cm^2). The expected neutron fluence levels for reactor internals located in the core region can exceed the threshold value and are susceptible to the effects of radiation-induced creep and stress relaxation.

Reactor internal components made of cast austenitic stainless steel (CASS) are susceptible to thermal aging and embrittlement. PWR CASS internal components have ferrite contents in excess of 20% and operate at a temperature of ~316°C (600°F). CASS components can becomes brittle under these conditions and may be susceptible to thermal embrittlement. Many CASS components have been replaced by machined parts.

In-service inspections are relied upon to detect cracks and other signs of aging-related failures in PWR internals that are susceptible to neutron irradiation and thermal aging effects. The adoption of a preventive maintenance program with the capability of detecting system degradations will enhance the safety as well as the efficiency of plant operations. Such a program can also provide useful information to the decision-making process concerning the repair and/or replacement of a degraded component.

Note that most reactor internals are not components of the reactor primary containment system. Failures of reactor internals may result in conditions that can challenge the integrity of the reactor primary containment system, but such failures cannot weaken the system itself. Key internal components can be replaced if necessary. Therefore, a vigorous and comprehensive in-service inspection program with the capability of detecting and monitoring system degradation will ensure the safe working of reactor internals components.

Internal Distribution

1. D. A. Casada
2. D. D. Cannon
3. R. D. Cheverton
4. D. F. Cox
5. C. P. Frew
6. R. H. Greene
7. H. D. Haynes
8. J. E. Jones Jr.
9. R. C. Kryter
10. J. D. Kueck

11–40. K. H. Luk

41. W. P. Poore III
42. C. E. Pugh
43. J. S. Rayside
44. T. L. Ryan
45. C. C. Southmayd
46. J. C. Walls
47. ORNL Patent Office
48. Central Research Library
49. Document Reference Section

50–51. Laboratory Records Department

52. Laboratory Records (RC)

External Distribution

53. G. Sliter, Electric Power Research Institute, P.O. Box 10412, Palo Alto, CA 94303
54. J. W. Tills, Institute for Nuclear Power Operations, 1100 Circle 75 Parkway, Atlanta, GA 30339-3064
55. R. J. Lofano, Brookhaven National Laboratory, Bldg. 130, Upton, NY 11973
56. R. P. Allen, Battelle-PNL, MS P8-10, P.O. Box 999, Richland, WA 99532
57. J. P. Vora, U.S. Nuclear Regulatory Commission, Office of Nuclear Regulatory Research, Electrical and Mechanical Engineering Branch, 5650 Nicholson Lane, Rockville, MD 20852
58. G. H. Weidenhamer, U.S. Nuclear Regulatory Commission, Office of Nuclear Regulatory Research, Electrical and Mechanical Engineering Branch, 5650 Nicholson Lane, Rockville, MD 20852
59. E. J. Brown, U.S. Nuclear Regulatory Commission, Office for Analysis and Evaluation of Operational Data, Reactor Operation Analysis Branch, Maryland National Bank Building, 7735 Old Georgetown Road, Bethesda, MD 20814
60. C. Michelson, Advisory Committee on Reactor Safeguards, 20 Argonne Plasma Suite 365, Oak Ridge, TN 37830
61. M. Vagins, U.S. Nuclear Regulatory Commission, Office of Nuclear Regulatory Research, Electrical and Mechanical Engineering Branch, Division of Engineering, 5650 Nicholson Lane, Rockville, MD 20852
62. J. J. Burns, U.S. Nuclear Regulatory Commission, Division of Engineering Safety, Office of Nuclear Regulatory Research, 5650 Nicholson Lane, Rockville, MD 20852
63. M. J. Jacobus, Sandia National Laboratories, P.O. Box 5800, Division 6447, Albuquerque, NM 87185
64. H. L. Magleby, Idaho National Engineering Laboratory, MS 2406, P.O. Box 1625, Idaho Falls, ID 83415
65. V. N. Shah, Idaho National Engineering Laboratory, P.O. Box 1625, Idaho Falls, ID 83415
66. Office of Assistant Manager for Energy Research and Development, Department of Energy, Oak Ridge Field Office, Oak Ridge, TN 37831

67–68. Office of Scientific and Technical Information, P. O. Box 62, Oak Ridge, TN 37831

NRC FORM 335 (2-89) NRCM 1102, 3201, 3202

U.S. NUCLEAR REGULATORY COMMISSION

BIBLIOGRAPHIC DATA SHEET

(See instructions on the reverse)

1. REPORT NUMBER (Assigned by NRC. Add Vol., Supp., Rev., and Addendum Numbers, if any.)

NUREG/CR-6048
ORNL/TM-12371

2. TITLE AND SUBTITLE

Pressurized-Water Reactor Internals Aging Degradation Study

Phase 1

3. DATE REPORT PUBLISHED

MONTH	YEAR
September	1993

4. FIN OR GRANT NUMBER

B0828

5. AUTHOR(S)

K. H. Luk

6. TYPE OF REPORT

7. PERIOD COVERED *(Inclusive Dates)*

8. PERFORMING ORGANIZATION – NAME AND ADDRESS *(If NRC, provide Division, Office or Region, U.S. Nuclear Regulatory Commission, and mailing address; if contractor, provide name and mailing address.)*

Oak Ridge National Laboratory
Oak Ridge, TN 37831-6285

9. SPONSORING ORGANIZATION – NAME AND ADDRESS *(If NRC, type "Same as above"; if contractor, provide NRC Division, Office or Region, U.S. Nuclear Regulatory Commission, and mailing address.)*

Division of Engineering
Office of Nuclear Regulatory Research
US Nuclear Regulatory Commission
Washington, DC 20555

10. SUPPLEMENTARY NOTES

11. ABSTRACT *(200 words or less)*

This report documents the results of a Phase 1 study on the effects of aging degradations on pressurized-water reactor (PWR) internals. Primary stressors for internals are generated by the primary coolant flow in the reactor vessel, and they include unsteady hydrodynamic forces and pump-generated pressure pulsations. Other stressors are applied loads, manufacturing processes, impurities in the coolant and exposures to fast neutron fluxes. A survey of reported aging-related failure information indicates that fatigue, stress corrosion cracking (SCC) and mechanical wear are the three major aging-related degradation mechanisms for PWR internals. Significant reported failures include thermal shield flow-induced vibration problems, SCC in guide tube support pins and core support structure bolts, fatigue-induced core baffle water-jet impingement problems and excess wear in flux thimbles. Many of the reported problems have been resolved by accepted engineering practices. Uncertainties remain in the assessment of long-term neutron irradiation effects and environmental factors in high-cycle fatigue failures. Reactor internals are examined by visual inspections and the technique is access limited. Improved inspection methods, especially one with an early failure detection capability, can enhance the safety and efficiency of reactor operations.

12. KEY WORDS/DESCRIPTORS *(List words or phrases that will assist researchers in locating the report.)*

NPAR, reactor internals, stressors, aging-related degradation mechanisms, component failure information, inservice inspections pressurized-water reactor (PWR), stress corrosion cracking (SCC), fatigue

13. AVAILABILITY STATEMENT

unlimited

14. SECURITY CLASSIFICATION

(This Page)

unclassified

(This Report)

unclassified

15. NUMBER OF PAGES

16. PRICE

NRC FORM 335 (2-89)

Printed
on recycled
paper

Federal Recycling Program

UNITED STATES
NUCLEAR REGULATORY COMMISSION
WASHINGTON, D.C. 20555-0001

OFFICIAL BUSINESS
PENALTY FOR PRIVATE USE, $300

SPECIAL FOURTH-CLASS RATE
POSTAGE AND FEES PAID
USNRC
PERMIT NO. G-67