PC No.	TITLE	QTY PER S.G.	NOZZLE/ OPENING SIZE	DETAIL No.	CLOSURE MATERIAL	REMARKS
1	PRIMARY NOZZLE	2	31" I.D.	2 & 4	ASTM A36	USE 1.0 KIP FOR RIGGING DESIGN WEIGHT
2	BLOWDOWN NOZZLE	2	1 (2¼" O.D.)	3	ASTM A36	
3	SHELL DRAIN	1	1"	3	ASTM A36	
4	WIDE RANGE LEVEL TAP	1	¾"	3	ASTM A36	
5	TRANSITION CONE COVER PLATE	1	13'-7¾"	1	ASTM A36	USE 20 KIP FOR RIGGING DESIGN WEIGHT (SEE NOTES 6 & 12)

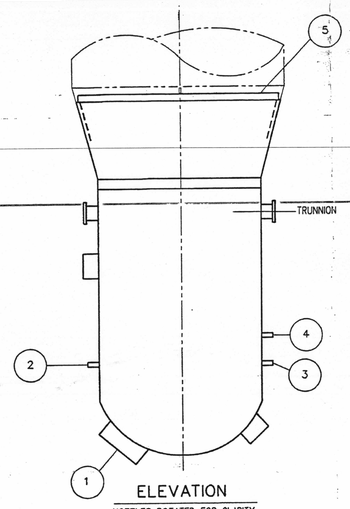

ELEVATION
NOZZLES ROTATED FOR CLARITY
SCALE: N.T.S.

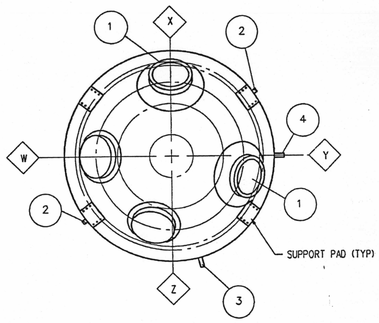

BOTTOM VIEW
SCALE: N.T.S.

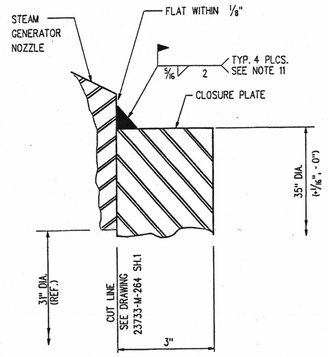

DETAIL 2
PRIMARY NOZZLE (SEE NOTE 14)
SCALE: N.T.S.

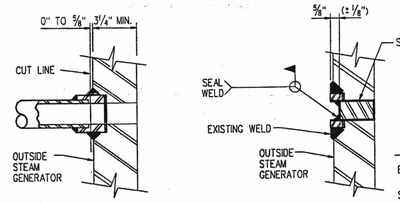

	PLUG DIAMETER	PLUG LENGTH	
BLOWDOWN NOZZLE	1 11/16" +0.00" -0.02"	3"	+0.25" -0.00"
SHELL DRAIN	1 13/16" +0.00" -0.02"	3"	+0.25" -0.00"
WIDE RANGE LEVEL TAP	19/32" +0.00" -0.02"	3"	+0.25" -0.00"

DETAIL 3
BLOWDOWN NOZZLE
SHELL DRAIN
WIDE RANGE LEVEL TAP
(SEE NOTE 15)
SCALE: N.T.S.

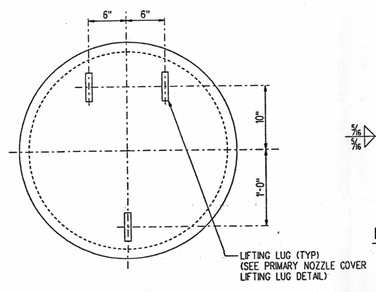

DETAIL 4
PRIMARY NOZZLE COVER PLATE
SCALE: N.T.S.

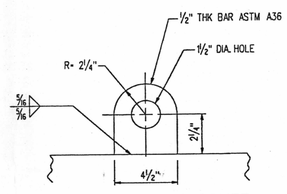

PRIMARY NOZZLE COVER LIFTING LUG DETAIL
(TYP.)
SCALE: N.T.S.

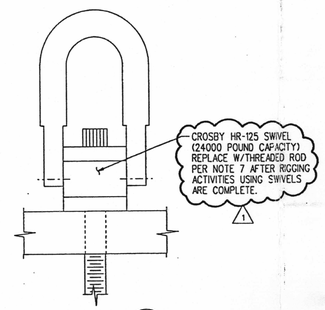

DETAIL 5
SCALE: N.T.S.

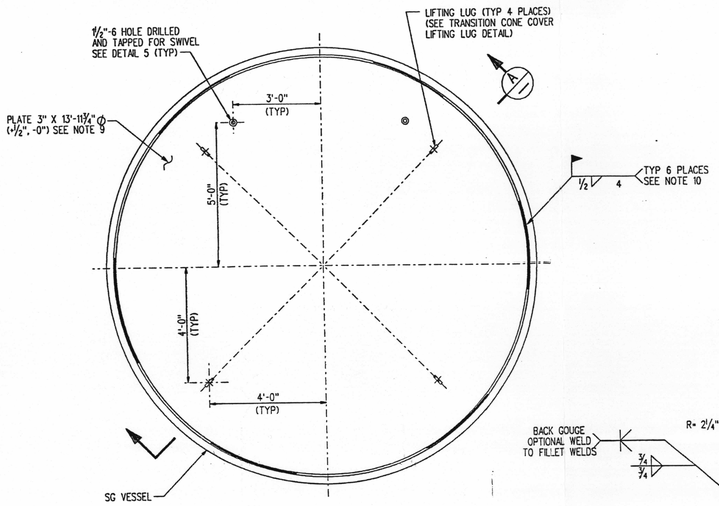

DETAIL 1
TRANSITION CONE COVER PLATE
SCALE: N.T.S.
(SEE NOTES 6 & 12)

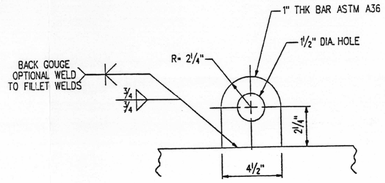

TRANSITION CONE COVER LIFTING LUG DETAIL
(TYP.)
SCALE: N.T.S.

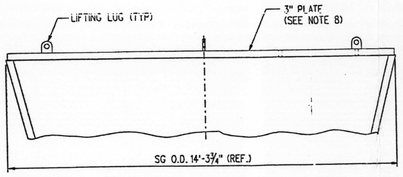

SECTION A
SCALE: N.T.S.

NOTES:

1. ALL WORK ON THIS DRAWING IS NON-SAFETY RELATED.
2. FABRICATE CLOSURE PLATES AND SEAL PLUGS IN ACCORDANCE WITH SPECIFICATION 23733-C-502(Q). PROVIDE LIFTING LUGS ON CLOSURE PLATES AS SHOWN TO FACILITATE INSTALLATION.
3. PERFORM ALL FIELD WELDING IN ACCORDANCE WITH THE SPECIAL PROCESSES MANUAL (SPM).
4. ALL CLOSURE PLATES AND PLUGS SHALL BE INSTALLED PRIOR TO REMOVING THE OLD STEAM GENERATOR LOWER ASSEMBLY (OSGLA) FROM CONTAINMENT. IF PRIMARY MANWAY OR SECONDARY HANDHOLE COVERS ARE REMOVED FROM THE OSGLA, THEY SHALL BE REINSTALLED IN ACCORDANCE WITH EXISTING PLANT PROCEDURES PRIOR TO REMOVING THE OSGLA FROM CONTAINMENT.
5. PAINTING OF CLOSURE MATERIALS IS NOT REQUIRED.
6. TRANSITION CONE COVER PLATE SHALL BE HANDLED IN AUXILIARY BUILDING USING ALL FOUR LUGS. RIGGING SHALL BE A SINGLE INVERTED BASKET SLING AND TWO SINGLE BRIDLES OR OTHER ENGINEERING APPROVED RIGGING CONFIGURATION WHICH WILL ENSURE EVEN LOAD DISTRIBUTION TO THE FOUR LUGS. MAINTAIN SLING ANGLES BETWEEN 45 AND 60 DEGREES. ALL SLINGS AND ASSOCIATED RIGGING COMPONENTS SHALL BE RATED FOR A MINIMUM OF 10 TONS.
7. ONE BOLT HOLE SHALL REMAIN OPEN UNTIL THE FINAL DRAIN-DOWN OF THE SECONDARY SIDE OF THE SG IS COMPLETED. CONSTRUCTION SHALL INSTALL 3¼" LONG (MINIMUM) 1½" DIAMETER ASTM A-36 THREADED ROD IN HOLES PRIOR TO REMOVAL FROM CONTAINMENT. THREADED ROD SHALL BE THREADED COMPLETELY INTO COVER PLATE HOLES, LEAVING 1/8" TO 1/4" EXTENDING ABOVE THE COVER PLATE. SEAL WELD THREADED ROD TO COVER PLATE.
8. BOTTOM OF 3" PLATE SHALL BE LEVEL WITHIN 1/4" AROUND ENTIRE CIRCUMFERENCE.
9. IF REQUIRED, TRANSITION CONE COVER PLATE SHALL BE SPLICED USING A FULL PENETRATION WELD.
10. SIX 1/2" X 4" LONG WELDS SHALL BE EQUALLY SPACED AROUND THE COVER PLATE CIRCUMFERENCE. ADD SEAL WELDS BETWEEN 1/2" WELDS.
11. FOUR 5/8" X 2" LONG WELDS SHALL BE EQUALLY SPACED AROUND THE COVER PLATE CIRCUMFERENCE. ADD SEAL WELDS BETWEEN THE 5/16" WELDS.
12. TRANSITION CONE COVER PLATE MAY BE HANDLED IN CONTAINMENT AND OUTSIDE OF AUXILIARY BUILDING USING TWO SWIVELS PER DETAIL 5. SLING ANGLES SHALL BE MAINTAINED BETWEEN 45 AND 60 DEGREES. ALL SLINGS AND ASSOCIATED RIGGING COMPONENTS SHALL BE RATED FOR A MINIMUM OF 10 TONS.
13. AFTER INSTALLATION OF CLOSURE PLATES AND PLUGS, ENCAPSULATION TO SEAL THE OSGLA SURFACES TO PREVENT THE SPREAD OF CONTAMINATION SHALL BE COMPLETED PRIOR TO REMOVING THE OSGLAS FROM CONTAINMENT.
14. SEE 01-DCP-306 FOR RCS PIPE CUTTING REQUIREMENTS.
15. SEE 01-DCP-307 FOR SMALL BORE SECONDARY PIPE CUTTING REQUIREMENTS.

REFERENCE DRAWINGS:

23733-M-001	STEAM GENERATOR SHELL GIRTH CUT AND GIRTH WELD
23733-M-264 SH.1	HOT LEG & CROSSOVER LEG PIPE CUT & WELDS

INSTRUCTIONS FOR VERTICAL STEAM GENERATORS FOR AMERICAN ELECTRIC POWER SERVICE CORPORATION DONALD C. COOK NUCLEAR POWER PLANT, BRIDGMAN, MICHIGAN, UNIT NO. 1, WESTINGHOUSE GENERAL ORDER NY-87303-AR6-AR5, TECHNICAL MANUAL 1440-C212:

FIGURE 1-1	OUTLINE
FIGURE 1-2	GENERAL ASSEMBLY
FIGURE 1-3	GENERAL ARRANGEMENT

REV. NO.	ELECT/CS	NUCLEAR	MECHANICAL	FACILITY DESIGN	CONST.
1	NR		NA		

COORDINATION SIGN-OFF

NO.	DATE	REVISIONS	BY	CHK	DES SUPV.	ENGR.	PROJ ENGR	APPR
1	7/2/00	INCORPORATES FCR M-033 AND FCR M-044, REISSUED FOR USE	RMK	AK	—		AKO	—
0	9/11/99	ISSUED FOR USE	RMK	CCG	—	ELG	DN	—

SCALE AS NOTED | DATE / / | DESIGNED | DRAWN | CHIEF ENGR.

BECHTEL
GAITHERSBURG, MARYLAND

AMERICAN ELECTRIC POWER
DONALD C. COOK NUCLEAR PLANT UNIT 1
STEAM GENERATOR REPLACEMENT

STEAM GENERATOR LOWER ASSEMBLY
COVER PLATES AND SEAL PLUGS

JOB NO.	DRAWING NO.	REV.
23733	23733-M-003	1

FOR INFORMATION ONLY

This drawing and the design it covers are the property of BECHTEL. They are merely loaned and on the borrower's express agreement that they will not be reproduced, copied, loaned, exhibited, or used except in the limited way and private use permitted by any written consent given by the lender to the borrower.

DFN=gais1012\SGR-CAD-ME\dc deonk\23733003.dgn
34 x 44 "E" SIZE
PSC- 4: 0: 0