12179-EM-157D

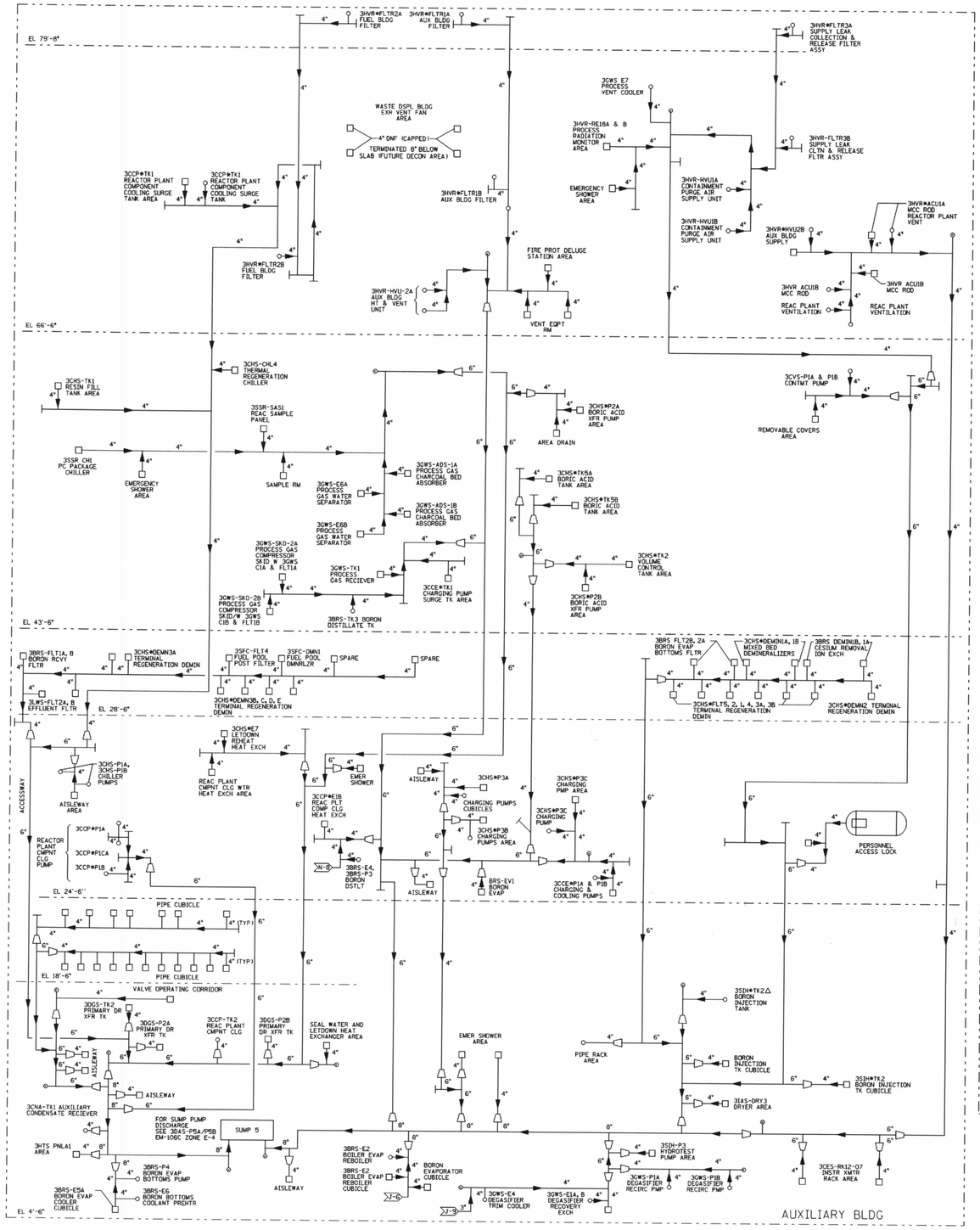

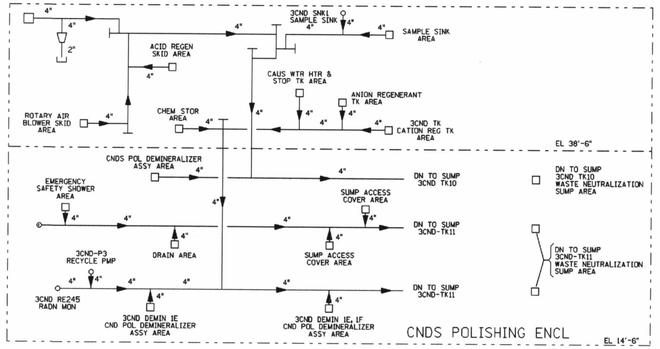

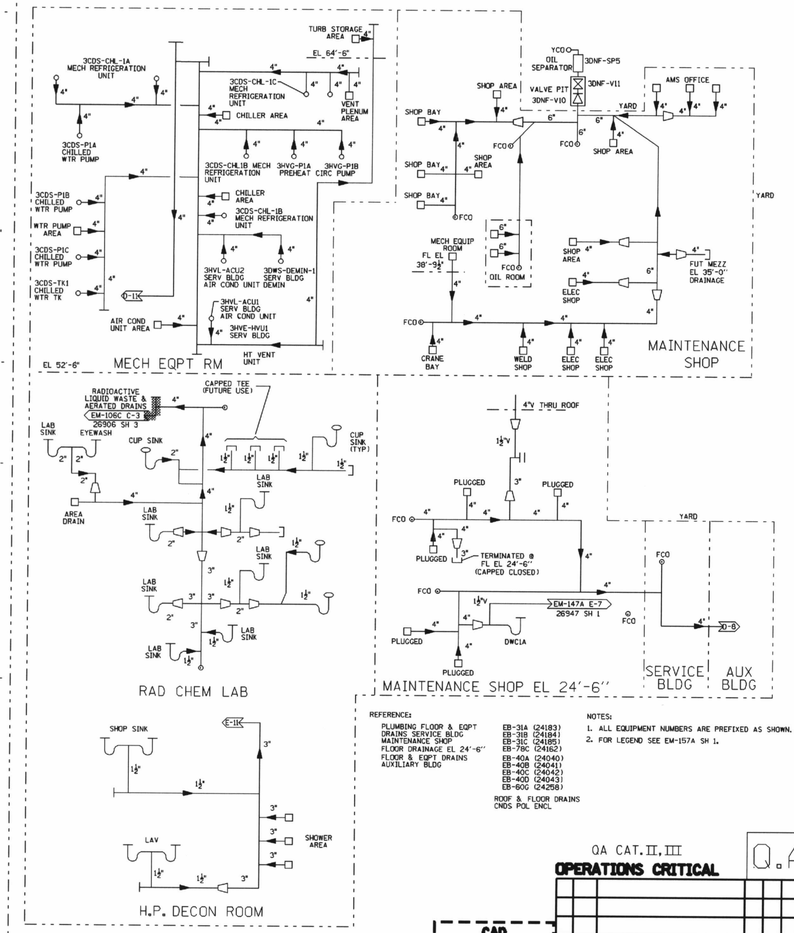

REFERENCE:

PLUMBING FLOOR & EQPT DRAINS SERVICE BLDG
MAINTENANCE SHOP FLOOR DRAINAGE EL 24'-6"
FLOOR & EQPT DRAINS AUXILIARY BLDG

EB-31A (24183)
EB-31B (24184)
EB-31C (24185)
EB-78C (24162)
EB-40A (24040)
EB-40B (24041)
EB-40C (24042)
EB-40D (24043)
EB-60C (24256)

ROOF & FLOOR DRAINS CNDS POL ENCL

NOTES:

1. ALL EQUIPMENT NUMBERS ARE PREFIXED AS SHOWN.
2. FOR LEGEND SEE EM-157A SH 1.

QA CAT. II, III

OPERATIONS CRITICAL

QA

CAD

NOTE: MANUAL REVISIONS TO THIS DOCUMENT MUST BE AS-BUILT AND PROPERLY FIX.

REV.	DATE	DESCRIPTION	BY	CHK	CORR	APP
		REVISIONS DURING CONSTRUCTION		P.A. No.	N/A	

P.A.*	NO.	DATE	REVISIONS	BY	CHK.	CORR.	APP.
N/A	00	4-20-02	INITIAL ISSUE PER REV 11	CLW			

ISSUED PER MASTER DRAWING 25212-26957 SH. 4 OF 4 REV 11

S&W DWG. NO. 12179-EM-157D

DRAWN BY: CHECKED BY:

Dominion Nuclear Connecticut Inc.

Millstone Power Station

TITLE: MILLSTONE POWER STATION-UNIT NO. 3
LICENSE RENEWAL DIAGRAM
PLANT DRAINAGE

BY	CHKD.	APP.	APP.
DATE	DATE	DATE	DATE

SCALE: NONE MICROFILM DATE DWG. NO. 25212-LR26957 SH. 4 OF 4 00

STONE & WEBSTER ENGINEERING CORPORATION BOSTON, MASS.

DESIGN, DRAWN: R.BOULAS

COMPONENTS SUBJECT TO AGING MANAGEMENT REVIEW

33350-1 REACTOR PLANT AERATED DRAINS

NOTE: SOME SHADED LINES MAY CONTAIN COMPONENTS FROM MORE THAN ONE SYSTEM.

D-211

Submitted by AHLUWALIAC on Wednesday January 07 2004 at 10:59:19 AM EST