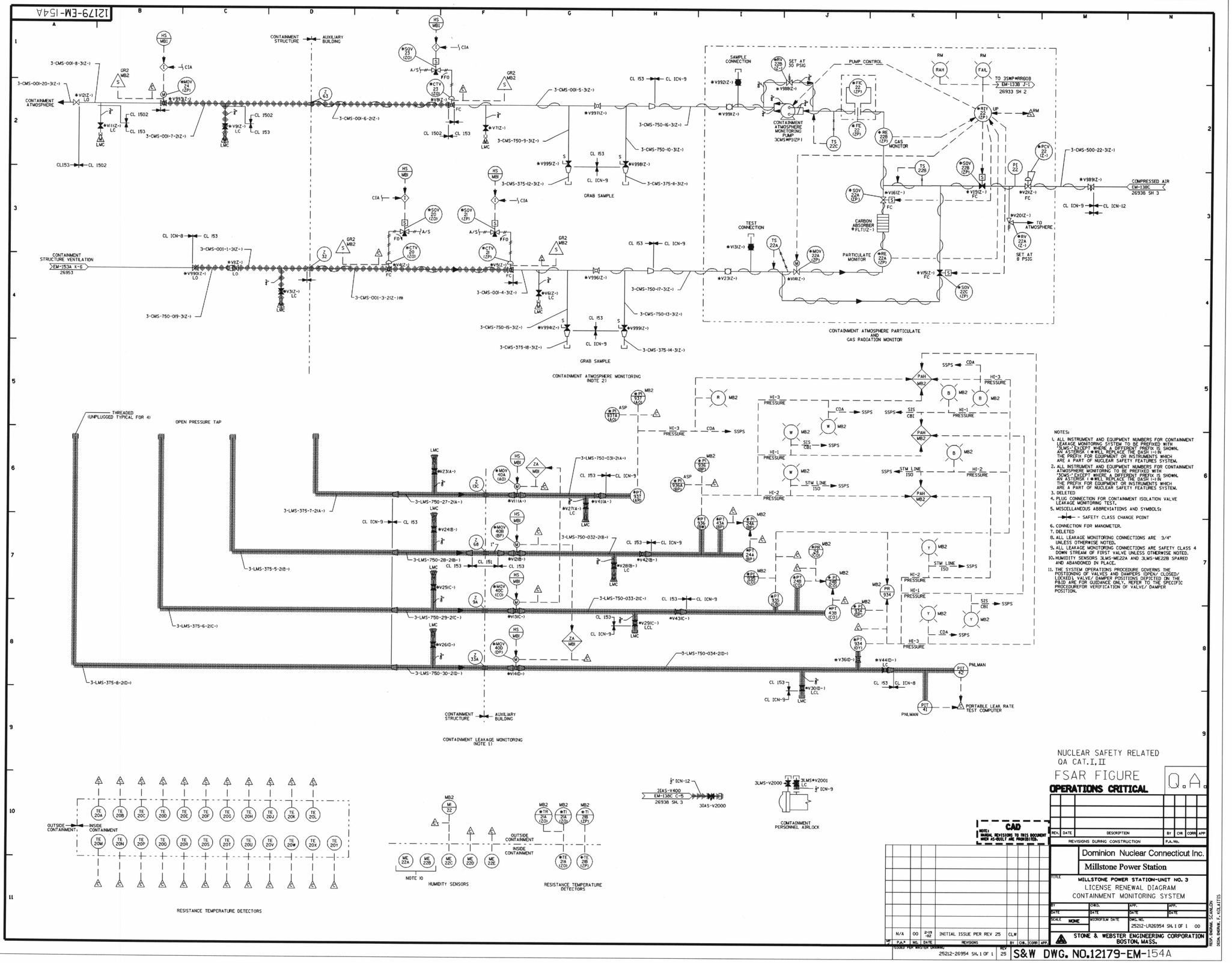

NOTES:

1. ALL INSTRUMENT AND EQUIPMENT NUMBERS FOR CONTAINMENT LEAKAGE MONITORING SYSTEM TO BE PREFIXED WITH "3LMS-" EXCEPT WHERE A DIFFERENT PREFIX IS SHOWN. AN ASTERISK (*) WILL REPLACE THE DASH (-) IN THE PREFIX FOR EQUIPMENT OR INSTRUMENTS WHICH ARE A PART OF NUCLEAR SAFETY FEATURES SYSTEM.
2. ALL INSTRUMENT AND EQUIPMENT NUMBERS FOR CONTAINMENT ATMOSPHERE MONITORING TO BE PREFIXED WITH "3CMS-" EXCEPT WHERE A DIFFERENT PREFIX IS SHOWN. AN ASTERISK (*) WILL REPLACE THE DASH (-) IN THE PREFIX FOR EQUIPMENT OR INSTRUMENTS WHICH ARE A PART OF NUCLEAR SAFETY FEATURES SYSTEM.
3. DELETED
4. PLUG CONNECTION FOR CONTAINMENT ISOLATION VALVE LEAKAGE MONITORING TEST.
5. MISCELLANEOUS ABBREVIATIONS AND SYMBOLS:
   - SAFETY CLASS CHANGE POINT
6. CONNECTION FOR MANOMETER.
7. DELETED
8. ALL LEAKAGE MONITORING CONNECTIONS ARE 3/4" UNLESS OTHERWISE NOTED.
9. ALL LEAKAGE MONITORING CONNECTIONS ARE SAFETY CLASS 4 DOWN STREAM OF FIRST VALVE UNLESS OTHERWISE NOTED.
10. HUMIDITY SENSORS 3LMS-ME22A AND 3LMS-ME22B SPARED AND ABANDONED IN PLACE.
11. THE SYSTEM OPERATIONS PROCEDURE GOVERNS THE POSITIONING OF VALVES AND DAMPERS (OPEN/ CLOSED/ LOCKED). VALVE/ DAMPER POSITIONS DEPICTED ON THE P&ID ARE FOR GUIDANCE ONLY. REFER TO THE SPECIFIC PROCEDUREFOR VERIFICATION OF VALVE/ DAMPER POSITION.

NUCLEAR SAFETY RELATED
QA CAT.I,II

FSAR FIGURE

OPERATIONS CRITICAL

Q.A.

CAD
NOTE: MANUAL REVISIONS TO THIS DOCUMENT WHEN AS-BUILT ARE PROHIBITED.

REV.	DATE	DESCRIPTION	BY	CHK	CORR	APP
		REVISIONS DURING CONSTRUCTION	P.A. No.			

Dominion Nuclear Connecticut Inc.
Millstone Power Station

TITLE: MILLSTONE POWER STATION-UNIT NO. 3
LICENSE RENEWAL DIAGRAM
CONTAINMENT MONITORING SYSTEM

BY	CHKD.	APP.	APP.
DATE	DATE	DATE	DATE
SCALE NONE	MICROFILM DATE	DWG. NO. 25212-LR26954 SH. 1 OF 1	00

STONE & WEBSTER ENGINEERING CORPORATION
BOSTON, MASS.

MF	P.A.*	NO.	DATE	REVISIONS	BY	CHK.	CORR	APP.
	N/A	00	2-19-02	INITIAL ISSUE PER REV 25	CLW			

ISSUED PER MASTER DRAWING 25212-26954 SH. 1 OF 1 | REV 25 | S&W DWG. NO.12179-EM-154A

DRAWN BY: CHECKED BY:

RESP. ENGINM. SCANLON
DESN. ENGINM. F. KOLAITIS

COMPONENTS SUBJECT TO AGING MANAGEMENT REVIEW

3312B	CONTAINMENT LEAKAGE MONITORING
3312C	CONTAINMENT ATMOSPHERE MONITORING
3332A	INSTRUMENT AIR

NOTE: SOME SHADED LINES MAY CONTAIN COMPONENTS FROM MORE THAN ONE SYSTEM.

D-205

Submitted by AHLUWALIAC on Wednesday January 07 2004 at 10:59:55 AM EST