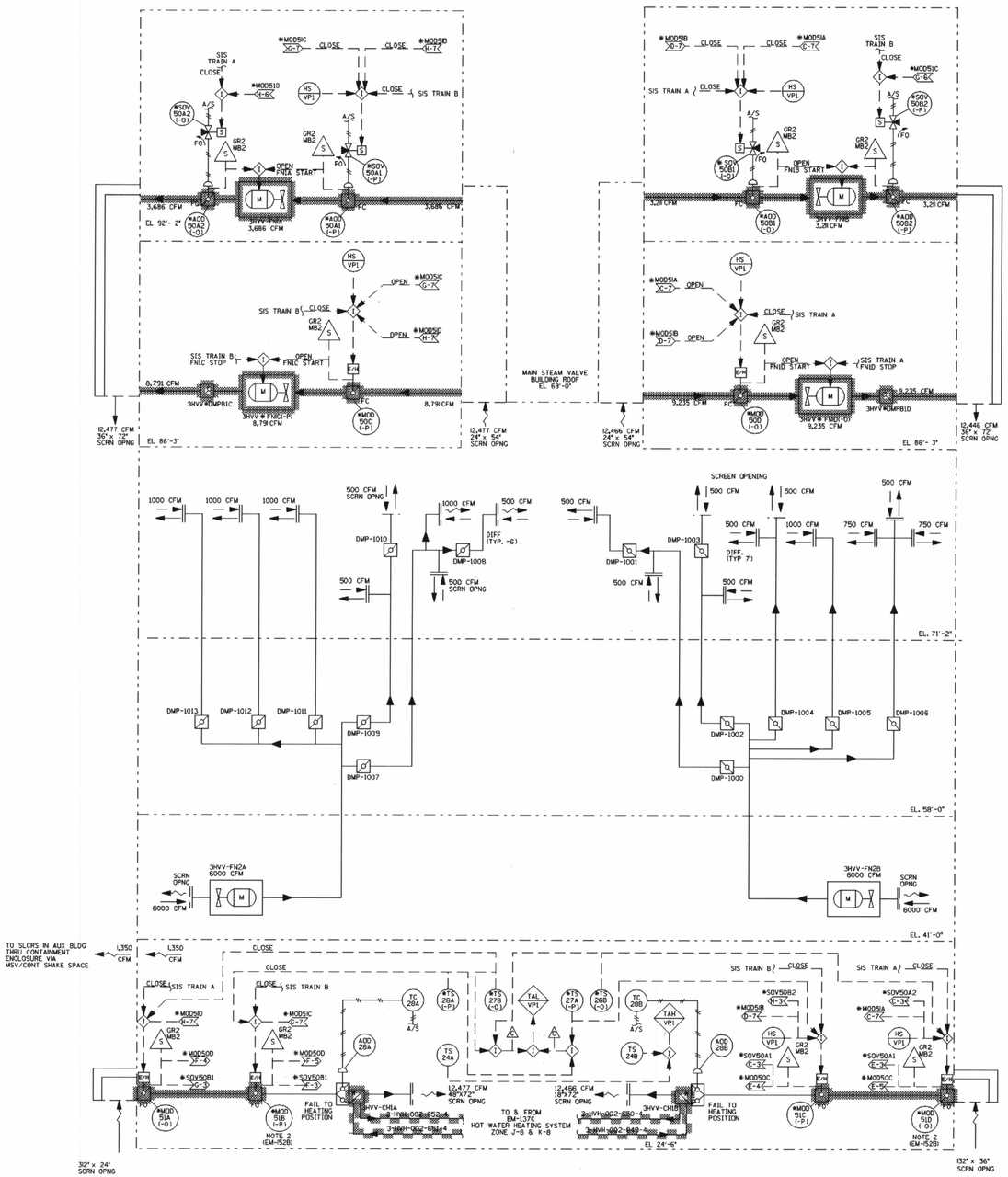

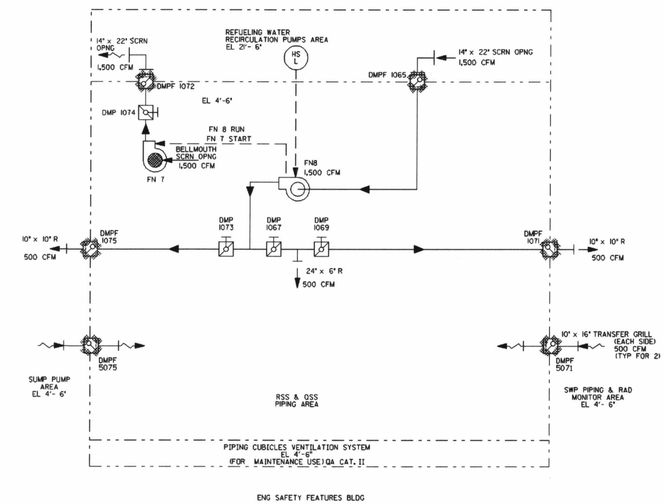

NOTES:

1. FOR GENERAL NOTES AND REFERENCE DRAWINGS SEE EM-152A \26952 SH 0.
2. * MOD 51B HAS ADDITIONAL * ZS FOR CLOSE IND. POWERED FROM THE ORANGE TRAIN. * MOD 51D HAS ADDITIONAL * ZS FOR CLOSE IND. POWERED FROM THE PURPLE TRAIN

NUCLEAR SAFETY RELATED
QA CAT.I,II

FSAR FIGURE

OPERATIONS CRITICAL

Q.A.

REV.	DATE	DESCRIPTION	BY	CHK	CORR	APP
		REVISIONS DURING CONSTRUCTION				P.A. No.

CAD
NOTE: MANUAL REVISIONS TO THIS DOCUMENT MADE AS-BUILT ARE PROHIBITED.

SF	P.A.*	NO.	DATE	REVISIONS	BY	CHK.	CORR	APP.
	N/A	00	5-15-02	INITIAL ISSUE PER REV 13	CLW			

ISSUED PER MASTER DRAWING 25212-26952 SH. 2 OF 3 REV 13

S&W DWG. NO. 12179-EM-152B

DRAWN BY: CHECKED BY:

Dominion Nuclear Connecticut Inc.
Millstone Power Station

TITLE: MILLSTONE POWER STATION-UNIT NO. 3
LICENSE RENEWAL DIAGRAM
ESF AND MSV BUILDINGS
VENTILATION

BY	CHKD.	APP.	APP.
DATE	DATE	DATE	DATE
SCALE NONE	MICROFILM DATE	DWG. NO. 25212-LR26952 SH. 2 OF 3 00	

STONE & WEBSTER ENGINEERING CORPORATION BOSTON, MASS.

REF: 25212-26952-E-F-FORTN4
DESIGN ENGINEER: F.KOLAITIS

COMPONENTS SUBJECT TO AGING MANAGEMENT REVIEW	
3315B	MAIN STEAM VALVE BUILDING HVAC
3314D	ESF BUILDING HVAC
3331D	HOT WATER HEATING

NOTE: SOME SHADED LINES MAY CONTAIN COMPONENTS FROM MORE THAN ONE SYSTEM.

D 202

Submitted by AHLUWALIAC on Wednesday January 07 2004 at 11:00:14 AM EST