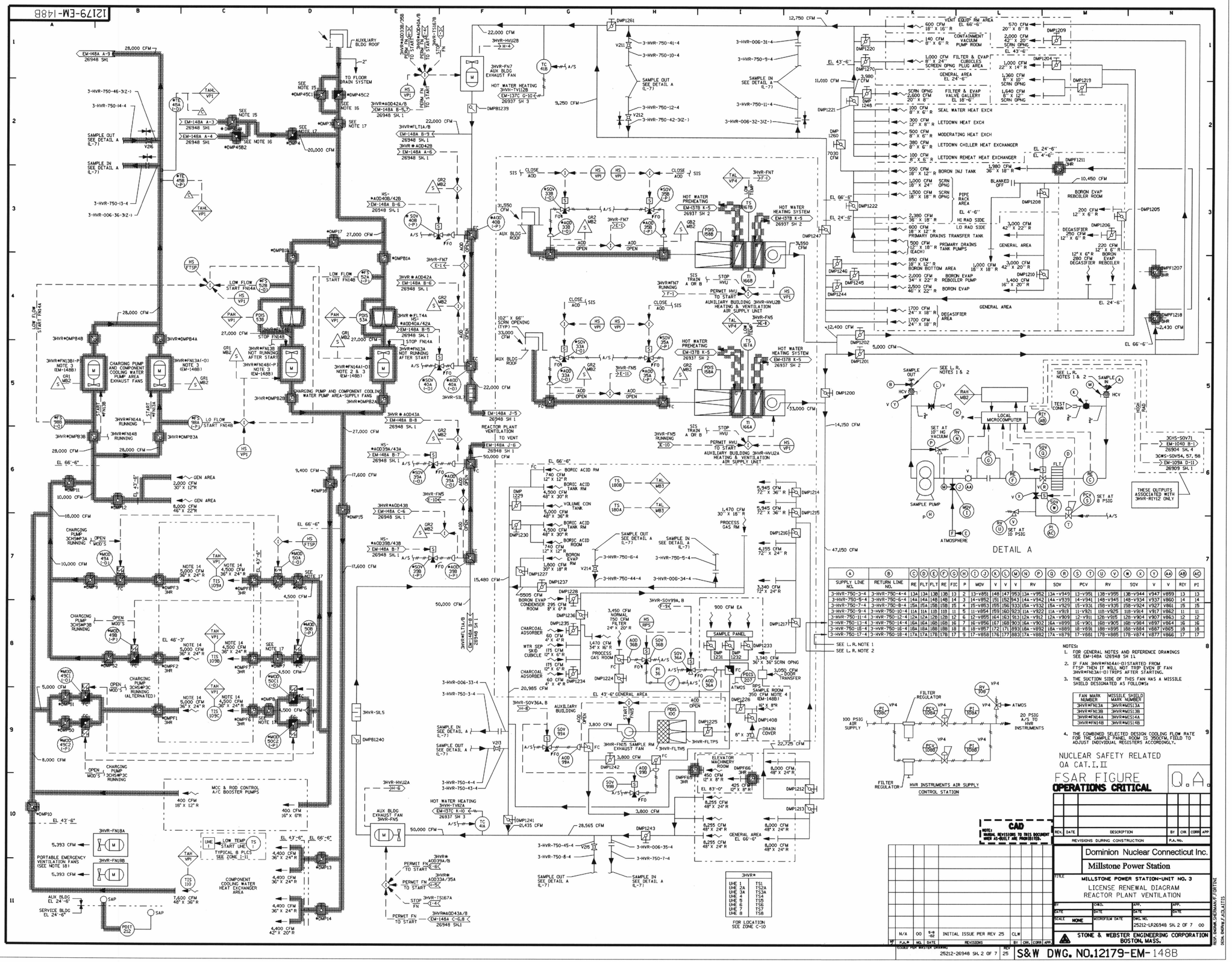

A SUPPLY LINE NO.	B RETURN LINE NO.	C RE	D FLT	E FLT	F RE	G FIC	H P	I MOV	J V	K V	L V	M RV	N SOV	O PCV	P RV	Q SOV	R V	S V	T V	U V	V RV	W SOV	X V	Y V	AA V	AB RIY	AC PI
3-HVR-750-3-4	3-HVR-750-4-4	13A	13A	13B	13B	13	2	13-V851	148	147	953	13A-V952	13A-V949	13-V951	13B-V955	13B-V944	V947	V859	13	13							
3-HVR-750-5-4	3-HVR-750-6-4	14A	14A	14B	14B	14	3	14-V852	151	152	943	14A-V942	14A-V939	14-V941	14B-V945	14B-V934	V937	V860	14	14							
3-HVR-750-7-4	3-HVR-750-8-4	15A	15A	15B	15B	15	4	15-V853	155	156	933	15A-V932	15A-V929	15-V931	15B-V935	15B-V924	V927	V861	15	15							
3-HVR-750-9-4	3-HVR-750-10-4	11A	11A	11B	11B	11	5	11-V854	159	160	923	11A-V922	11A-V919	11-V921	11B-V925	11B-V914	V917	V862	11	11							
3-HVR-750-11-4	3-HVR-750-12-4	12A	12A	12B	12B	12	6	12-V855	164	163	913	12A-V912	12A-V909	12-V911	12B-V915	12B-V904	V907	V863	12	12							
3-HVR-750-13-4	3-HVR-750-14-4	16A	16A	16B	16B	16	7	16-V856	167	168	903	16A-V902	16A-V899	16-V901	16B-V905	16B-V894	V897	V864	16	16							
3-HVR-750-15-4	3-HVR-750-16-4	18A	18A	18B	18B	18	8	18-V857	172	171	893	18A-V892	18A-V889	18-V891	18B-V895	18B-V884	V887	V865	18	18							
3-HVR-750-17-4	3-HVR-750-18-4	17A	17A	17B	17B	17	9	17-V858	176	177	883	17A-V882	17A-V879	17-V881	17B-V885	17B-V874	V877	V866	17	17							

Submitted by AHLUWALIAC on Wednesday January 07 2004 at 11:01:54 AM EST