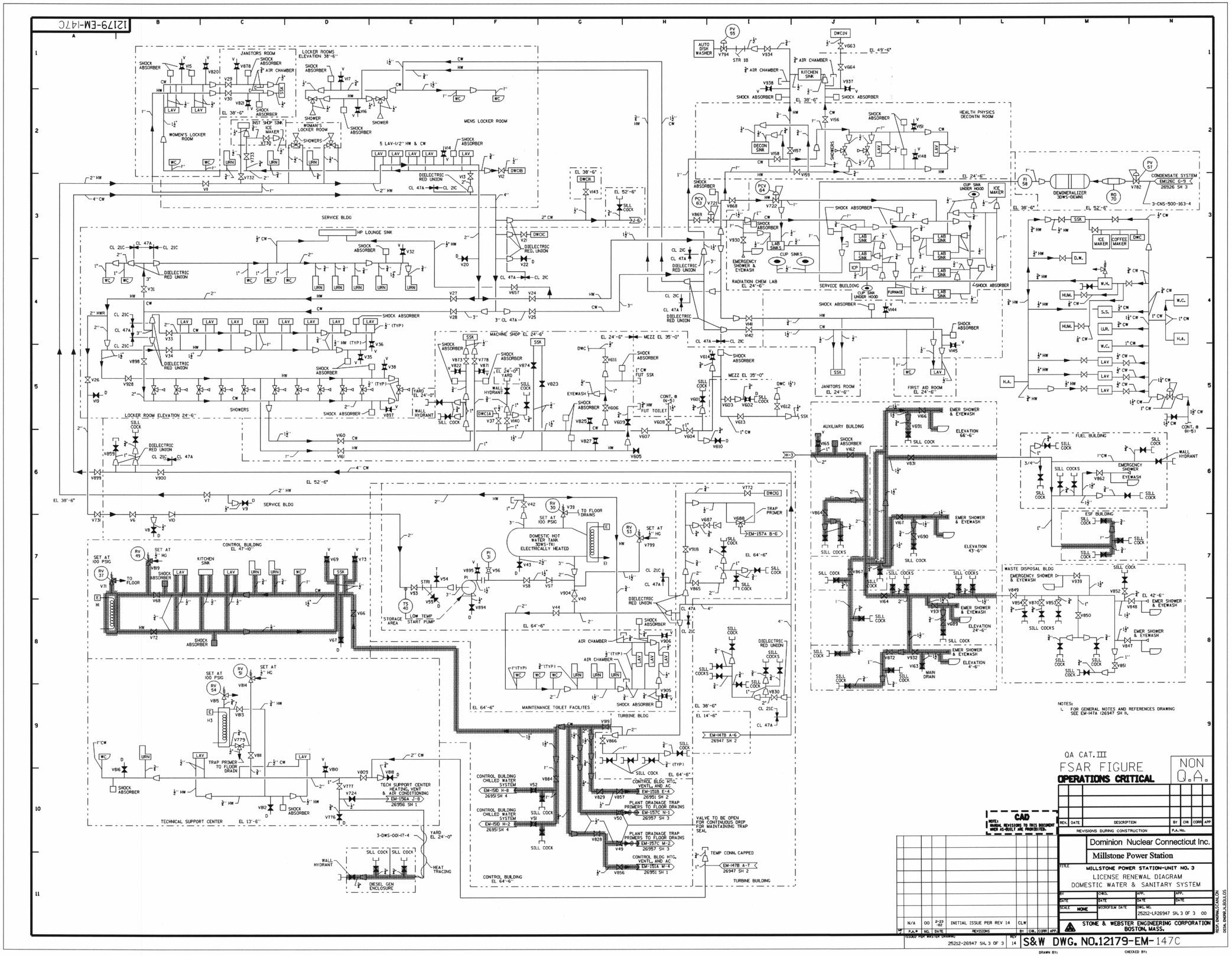

D-184

Submitted by AHLUWALIAC on Wednesday January 07 2004 at 11:02:11 AM EST