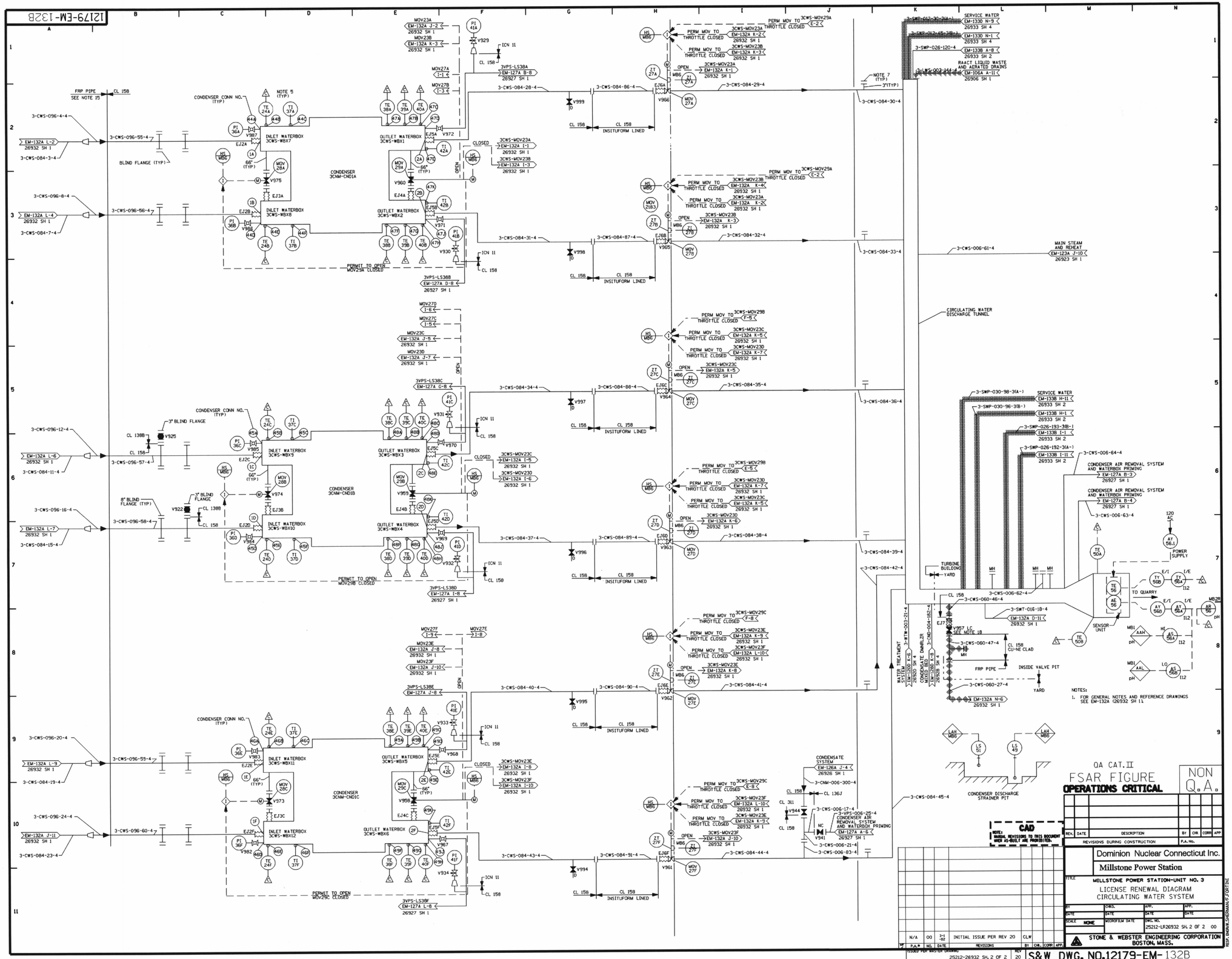

D162

Submitted by AHLUWALIAC on Monday January 19 2004 at 09:29:58 AM EST