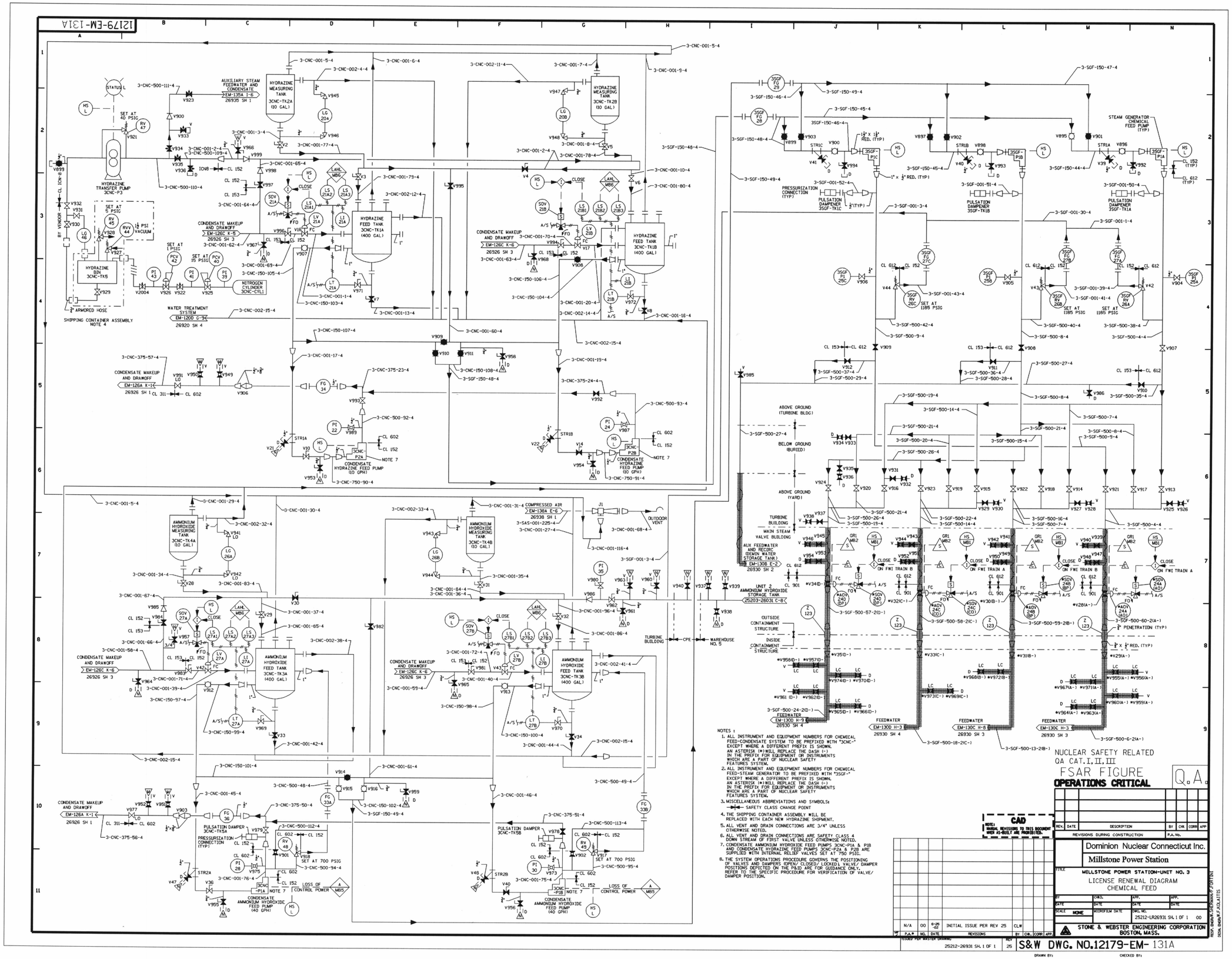

NOTES :

1. ALL INSTRUMENT AND EQUIPMENT NUMBERS FOR CHEMICAL FEED-CONDENSATE SYSTEM TO BE PREFIXED WITH "3CNC-" EXCEPT WHERE A DIFFERENT PREFIX IS SHOWN. AN ASTERISK (*) WILL REPLACE THE DASH (-) IN THE PREFIX FOR EQUIPMENT OR INSTRUMENTS WHICH ARE A PART OF NUCLEAR SAFETY FEATURES SYSTEM.
2. ALL INSTRUMENT AND EQUIPMENT NUMBERS FOR CHEMICAL FEED-STEAM GENERATOR TO BE PREFIXED WITH "3SGF-" EXCEPT WHERE A DIFFERENT PREFIX IS SHOWN. AN ASTERISK (*) WILL REPLACE THE DASH (-) IN THE PREFIX FOR EQUIPMENT OR INSTRUMENTS WHICH ARE A PART OF NUCLEAR SAFETY FEATURES SYSTEM.
3. MISCELLANEOUS ABBREVIATIONS AND SYMBOLS:
   SAFETY CLASS CHANGE POINT
4. THE SHIPPING CONTAINER ASSEMBLY WILL BE REPLACED WITH EACH NEW HYDRAZINE SHIPMENT.
5. ALL VENT AND DRAIN CONNECTIONS ARE 3/4" UNLESS OTHERWISE NOTED.
6. ALL VENT AND DRAIN CONNECTIONS ARE SAFETY CLASS 4 DOWN STREAM OF FIRST VALVE UNLESS OTHERWISE NOTED.
7. CONDENSATE AMMONIUM HYDROXIDE FEED PUMPS 3CNC-P1A & P1B AND CONDENSATE HYDRAZINE FEED PUMPS 3CNC-P2A & P2B ARE SUPPLIED WITH INTERNAL RELIEF VALVES SET AT 750 PSIG.
8. THE SYSTEM OPERATIONS PROCEDURE GOVERNS THE POSITIONING OF VALVES AND DAMPERS (OPEN/ CLOSED/ LOCKED). VALVE/ DAMPER POSITIONS DEPICTED ON THE P&ID ARE FOR GUIDANCE ONLY. REFER TO THE SPECIFIC PROCEDURE FOR VERIFICATION OF VALVE/ DAMPER POSITION.

REV.	DATE	DESCRIPTION	BY	CHK	CORR	APP
N/A	00	6-28-02 INITIAL ISSUE PER REV 25	CLW			

REVISIONS DURING CONSTRUCTION — P.A. No.

P.A.* NO. DATE REVISIONS BY CHK. CORR. APP.

ISSUED PER MASTER DRAWING 25212-26931 SH. 1 OF 1 — REV 25

DRAWN BY: CHECKED BY:

DESIG. ENGIN.R.SIEMANS/F.FORTUNI — RESP. ENGIN.R.F.KALAITIS

Submitted by AHLUWALIAC on Wednesday January 07 2004 at 11:04:41 AM EST

D-158