CENTER FOR NUCLEAR WASTE REGULATORY ANALYSES

TECHNICAL OPERATING PROCEDURE

Proc. TOP-001-07

Revision 0

Title

PROCEDURE FOR
HIGH-LEVEL WASTE MANAGEMENT SYSTEM FUNCTIONAL ANALYSIS

EFFECTIVITY AND APPROVAL

Revision 0 of this procedure became effective on _____. This procedure consists of the pages and changes listed below.

Page No.	Change	Date Effective
1-23	0	

SUPERSEDED

Supersedes Procedure No. NONE

Approvals

Written By	Date	Technical Review	Date
Ted Romine	11/12/91	John Hageman	11/12/91
Quality Assurance	**Date**	**Cognizant Director**	**Date**
Bruce Mabrito	11/13/91	Wesley Patrick	11/13/91

CNWRA Form TOP-1

PROCEDURE FOR HIGH-LEVEL WASTE MANAGEMENT SYSTEM FUNCTIONAL ANALYSIS

1. PURPOSE AND SCOPE

This procedure provides instructions for the performance and content of a functional analysis conducted for the Nuclear Regulatory Commission (NRC) of the high-level radioactive waste (HLW) management system authorized by the Nuclear Waste Policy Act of 1982 (NWPA), as amended, and related legislation.

It is contemplated that the functional analysis will be performed for the overall waste management system in two parts encompassing the major segments of that system for which the NRC has licensing responsibilities: an interim storage facility [e.g., the Monitored Retrievable Storage (MRS)], if approved by the Congress; and the geologic repository.

2. DEFINITIONS

In addition to the generally applicable terms and definitions contained in 10 CFR 60.2, the following terms are to be used in the conduct of the waste management system functional analysis.

2.1 System

A system is a composite of elements that work together to accomplish a stated purpose. Elements may include personnel, processes and procedures, equipment, software, and facilities.

2.2 Program

A program (or project) is the set of activities and associated resources required to create a system that will satisfactorily accomplish the stated purpose. Dependent on the nature of the system to be created, a program may include system engineering; research and investigation (e.g., to define the system operating environment and the constraints imposed on the system by that environment); design and development, often including the construction and test of a prototype of the system or a significant part of the system; creation of the deliverable physical system (which may include facility construction, equipment fabrication and assembly, preparation of system software and operational procedures, and

training of operating personnel); and verification of the ability of the physical system to satisfactorily accomplish the stated purpose.

2.3 System Mission

The system mission is the purpose of the particular system of interest; that is, the specific end objective(s) the system is intended to accomplish.

2.4 Functional Analysis

Functional analysis is the systematic top-down decomposition of the system mission into its mission-dependent functions. The system mission is first broken down into the primary functions required for its accomplishment (see section 5.1.2). Then, working one level at a time, each function is analyzed to identify the subfunctions, constraints and generic system elements required for its accomplishment. In addition to the actions required of the individual functions, this analysis identifies, as applicable, the sequences of those actions.

2.5 Parent Function

The function from which a set of subfunctions is derived in the process of functional analysis; the function that is being decomposed at any one time during the conduct of functional analysis.

2.6 Function (or Subfunction)

A function is an action that is necessary to accomplish the system mission. Subfunctions are identified by decomposition of a parent function in response to a standard question without consideration of other functions, location within the array of functions, relative importance, or other such factors.

- A subfunction is identified if (and only if) it is "necessary" for the accomplishment of the parent function.

- The set of subfunctions for a given parent function is complete when all functions "sufficient" for the accomplishment of the parent function have been identified.

For the geologic repository, this involves action(s) to be performed by any element of the physical system such as the geologic setting; operational facilities, equipment, procedures, software, or personnel; or any combination thereof.

2.7 Constraint

A constraint is (1) a limitation on the conduct or impact of one or more functions, or (2) a condition under which a function must be performed, or (3) a limitation or condition under which a generic system element must operate. Constraints are identified by the decomposition of functions or parent constraints in the same basic manner described above under section 2.6, Function (or Subfunction).

2.8 Generic System Element

A generic system element is a constituent part of the physical system necessary to provide the ability to perform one or more functions under the applicable constraint(s) in any potential geologic setting. Generic repository elements are expected to include a geologic setting and operational facilities, equipment, software, procedures, and personnel. Generic system elements are not usually included in the body of a functional analysis. They are included in this analysis because of the frequency with which requirements of 10 CFR Part 60 are framed in terms of such system elements, and the consequent need for an understanding of the potential scope of the application of those requirements.

2.9 Surface

This term is intended to include potential near-surface facilities and/or equipment such as bunkers, shallow underground facilities, foundations, and buried utility lines.

2.10 Transport

"Transport" is used exclusively in the context of transhipment of waste and other materials between major facilities by, for example, railcar or heavy truck; e.g., from a reactor to an MRS or from West Valley to a repository.

2.11 Transfer

"Transfer" is used exclusively in the context of movement of waste and other materials within the confines of a given major facility that is attendant to the processes performed at that facility; e.g., at a repository, between receiving and a lag storage facility or from a lag storage facility to an emplacement location.

2.12 Fitness for Duty

This term is intended to relate to general health, emotional stability, the presence of problems related to drugs or alcohol, excessive mental stress or any similar problems that could impair the ability of personnel to function in a safe and satisfactory manner.

2.13 Waste Container/Package

This is intended as a generic, design-independent name for a containment device used at any stage of the process and for any type of radioactive waste. This does not include a cask or similar protective device that may be used exclusively during waste transport or waste transfer.

3. RESPONSIBILITY

3.1 The WSE&I Element Manager is assigned responsibility for the conduct of functional analysis activities and the maintenance of the resulting lists and/or diagrams described in this procedure.

3.2 Other responsibilities are as described in TOP-001, Section 3.

4. CRITERIA

4.1 Subject of the Analysis. Functional analysis and related top-down analytical methods have been in use for several decades in many industries for both program (or "programmatic") analysis and physical system analysis. Program analyses define the activities and interactions required to create the physical system. Examples of program analyses include program management networks, task flow diagrams (identifying the sequence of design and development activities and the movement of information between activities; i.e., input-output relationships), manufacturing process diagrams (identifying the sequence of processes and the movement of material), and document hierarchies. System analyses define and/or quantify properties of the system that will perform the stated mission. Examples include functional breakdowns or analyses, requirements allocation, system/-subsystem breakdowns, logic or event diagrams (e.g., fault tree analyses), maintenance diagrams and spares trees. The subjects, purposes and applications of the two types of analyses, while clearly related, are distinct and different.

The HLW management system functional analysis must always be focused solely on the functions of a physical system (i.e., functions of a site and the operational facilities, equipment, software, personnel and procedures) that would perform the

system mission. Activities such as prelicensing research, site characterization, design, licensing, facility construction and equipment manufacturing are elements of the program that will create that physical system. Such activities may be the subject of a separate functional analysis of the NRC regulatory program and/or DOE waste management program.

4.2 Techniques. Three techniques are in common usage for functional analysis. In order of decreasing complexity they are (1) logic flows/networks (commonly accompanied by "time-lines", which constitute a high-order operations analysis), (2) functional flows, and (3) trees. As discussed above, these basic techniques are equally applicable to program analysis and system analysis. One of the key attributes of these techniques is that they provide proven methods for systematic subdivision of a complex entity in a disciplined manner. Detailed analytical processes can then be applied at the lower levels with assurance of complete coverage of the total system or program.

Logic flows/networks (and, often, time-lines) are necessary for the functional analysis of systems (or subsystems) that operate in a variety of different modes, scenarios, and/or environments that must be considered in various combinations and sequences. Functional flows, the most commonly used analysis technique, are appropriate for simpler systems with a modest number of parallel or alternative operating modes.

The "tree" technique is preferred for those systems characterized by a basically serial sequence of functions with alternative operating modes limited principally to contingency or emergency provisions. Because of its relatively economical presentation, this technique is also used for the preliminary analysis of more complex systems or for the examination of only the higher-order functions of complex systems. The functions tree approach also provides the most visible traceability to the system mission and, as a result, clearly demonstrates the necessity of each function.

The waste management system mission is a basically serial process. In addition, the primary application of the functional analysis is in the analysis of applicable regulations. This application requires only the higher-order functions --- a maximum of five levels deep. Consequently, the NRC functional analysis needs for this system are readily satisfied by the development of a functions tree. Therefore, the "tree" technique has been chosen as the means of developing the functions for use in SRA.

4.3 Analysis Requirements. The system functional analysis has three key requirements. The first is to avoid preconceptions by defining the functions in a manner that is independent of site-specific conditions, design solutions (e.g., a specific emplacement approach), or pre-existing regulatory requirements. This is done, in part, by defining the minimum number of requirements and/or properties for the system concept used in the analysis. The requirements and properties are intended solely to bound the overall system concept for which functions are to be identified. For the waste management system these are limited to those inherent in the applicable Federal statutes and the basic system mission:

- Dispose of HLW including spent fuel and defense wastes;
- Store waste on an interim basis (e.g., in an MRS, as approved by Congress);
- Dispose of the waste in a deep mined geologic repository;
- Maintain the preclosure capability to retrieve spent fuel;
- Employ multiple barriers, including the geologic setting and at least one enclosed container, to ensure long-term containment and isolation from the accessible environment;
- Ensure public and worker health and safety and protection of the environment in accordance with technical requirements and criteria promulgated by the Nuclear Regulatory Commission and generally applicable standards for radioactivity promulgated by the Environmental Protection Agency.

Second, an associated requirement is that, consistent with Commission policy, the products of the functional analysis are to be "generic"; i.e., are to be applicable to any site and are to allow for any detailed design and operational approaches that would satisfactorily accomplish the HLW management system mission.

The third requirement is to identify all functions, constraints and generic system elements necessary for performance of the system mission free of overt or hidden judgments of their relative importance. The actual importance to safety and waste isolation will be established by subsequent analysis based on performance assessment and sensitivity studies.

Assurance of the satisfaction of these requirements will be provided by the use of a disciplined approach to the analysis. This discipline is to be imposed by a set of standardized questions and a checklist used at every step in the analysis. The

satisfaction of these requirements also will be verified by independent review of each branch of the functions tree.

5. PROCEDURE

5.1 Conduct of the Functional Analysis

5.1.1 The conduct of a valid analysis requires strict adherence to the distinction between system and program described in section 4.1, to the requirements and properties described in section 4.3, and to the use of the standardized questions and the sequence of analysis described in sections 5.1.2 through 5.1.5. This level of discipline is best maintained if the analysis is performed by small (i.e., 3 to 5 person) groups under the leadership of an experienced "facilitator". These groups are to be composed of scientists and/or engineers who provide expertise in the technical discipline(s) involved in the parent function at the level of detail being analyzed.

5.1.2 Functions. The functional analysis of the HLW management system shall begin with the system mission. The primary (highest-order) functions shall be identified in response to the question, "What actions are necessary and sufficient to perform this mission?" Subfunctions shall be defined in response to the question, "What actions are necessary and sufficient to completely satisfy this parent function?" The appropriate question is to be pursued at each level of each branch of the functional tree until each level is considered complete as defined below.

Constraints. Following the development of a closely related subset of repository functions, the basic question becomes "What constraints are necessary and sufficient to satisfactorily perform this function?" This question is to be addressed to each function in the subset to ensure the identification of all applicable constraints. (The repository constraints primarily have to do with three factors: ensuring the ability to operate satisfactorily under adverse conditions, limiting adverse alterations of the geologic medium, and limiting preclosure exposures and releases of radioactive and hazardous materials.) Constraints are most relevant if they remain listed and displayed with the highest level parent function to which they apply.

Generic System Elements. Upon completion of the identification of subfunctions and constraints for a primary function, the associated generic system elements are to be defined. This is to be accomplished

by applying to each primary function the question, "What types of system elements (operational facilities, equipment, software, procedures and personnel) must be included in the system in order to perform this primary function at any potential site?" The analysis requirements of section 4.3 must be closely adhered to during the conduct of this analysis.

5.1.3 The key to the successful development of any tree-structured analysis is a systematic, disciplined breakdown, level by level; i.e., each level of each branch must be exhausted to the extent of current knowledge before going to the next lower level or to another branch.

This basic method, which is illustrated in Figure 1, Functional Analysis Development Sequence, shall be followed in the conduct of the HLW management system functional analysis. The steps illustrated in the figure are explained below.

Step 1. Fully develop the first level of subfunctions under a given parent function (in this example, subfunctions 1.1.1.1 through 1.1.1.N under parent function 1.1.1) by completing responses to the applicable question (see section 5.1.2). Refer to Attachment A to this procedure (Repository Functional Analysis Checklist) to aid in the identification of appropriate functions.

Review the description of each function for correctness and clarity. Ensure that each function and its description fits within the minimum system requirements and properties defined in section 4.3 above; and that it is independent of site-specific conditions, design solutions or pre-existing regulatory criteria.

Review the set of subfunctions for completeness; i.e., have <u>all</u> necessary and sufficient subfunctions been identified? Next, review the subject set of subfunctions for consistency by comparing them to other functions to identify any significant inconsistencies in the descriptions of highly-similar functions. Any differences in descriptions must be justified by a need to identify differences in (1) the environment (e.g., surface versus subsurface), (2) the specific operations (e.g., receiving waste from off-site versus waste in lag storage) and/or the phase of the mission (e.g., preclosure versus postclosure).

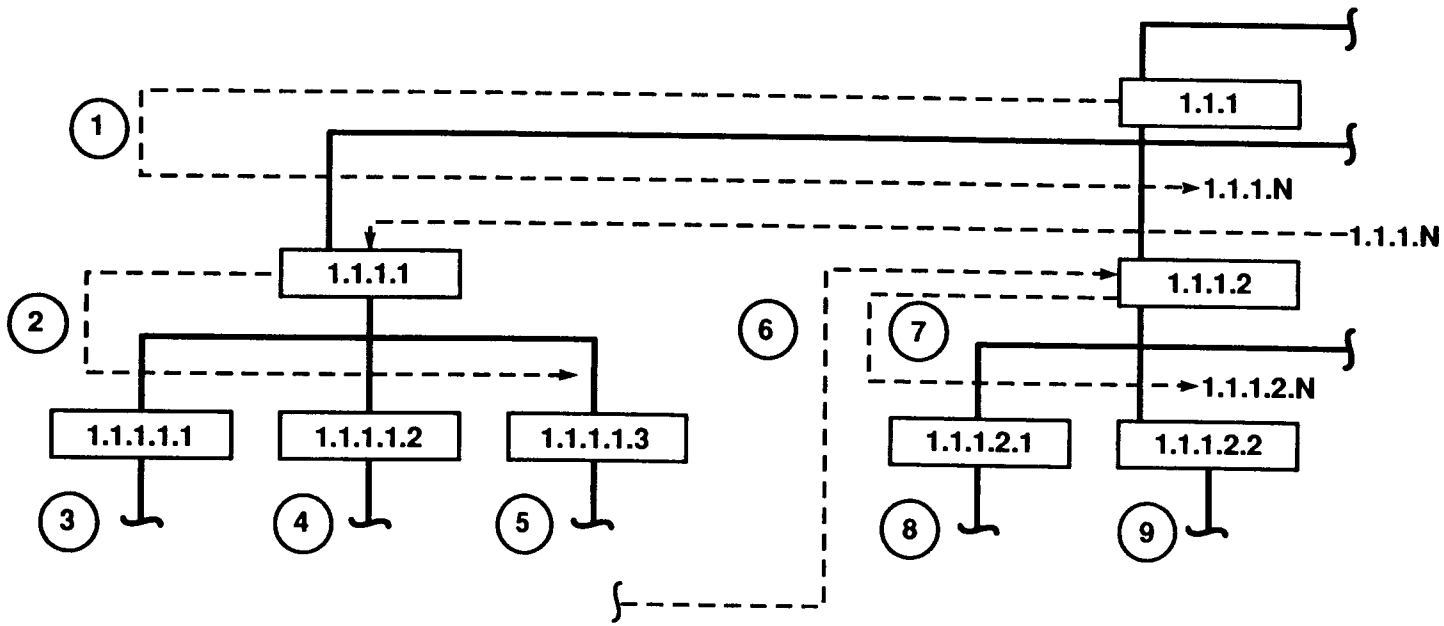

FIGURE 1. FUNCTIONAL ANALYSIS DEVELOPMENT SEQUENCE

Assign an identifying number to each subfunction using the standard decimal numbering system illustrated in Figure 1.

Move to the leftmost function of those just developed (in this example, function 1.1.1.1)

Step 2. Repeat the process of Step 1 (in this example, to develop functions 1.1.1.1.1, 1.1.1.1.2, and 1.1.1.1.3).

Step 3. Continue the process of Steps 1 and 2 until the first branch of functions is complete. The development of a branch normally terminates naturally when it reaches the point at which an appropriate or meaningful function can no longer be identified without the assumption of an approach to satisfying the subject parent function (e.g., the assumption of a site condition or property, a subsystem selection, or a design solution).

Due to the regulatory application of the analysis to be performed under this procedure, there are two additional conditions for truncating the development of a branch. First, if none of the functions identified at the same level of a single branch are related in any way to radiological health or safety, that branch is to be terminated at that level with a note to that effect. Second, unless specific direction is provided to the contrary, a branch only need be developed to the level at which the NRC would be expected to provide formal regulatory guidance to the applicant. This is not intended to imply that these are the limits of the NRC program. It is intended, rather, to terminate the analysis at a functional level that corresponds with the typical level of Technical Review Components that will be contained in the Format and Content Regulatory Guide. Development of the functional analysis to this level will provide a comprehensive reference source for use in the development of oversight planning, compliance determination methods, and other elements of the regulatory program.

Step 4. Move back up the tree structure and to the right to the first function that has not been fully developed (in this example, assume that is function 1.1.1.1.2). Develop the subfunctions of that parent function in accordance with Steps 1, 2, and 3 above. Repeat Step 4 until all subfunctions at all appropriate levels under function 1.1.1.1.2 are identified.

Step 5. Continue as in Step 4 until all subfunctions at all appropriate levels under function 1.1.1.1.3 are completed. This completes the analysis of example function 1.1.1.1.

Step 6. Move back up the tree and to the right to the first function that has not been fully developed (in this example, to function 1.1.1.2).

Steps 7, 8, 9, etc. Repeat the basic process described in Steps 1 through 4 until all branches with all subfunctions necessary and sufficient for the subject primary function are completed, always asking the applicable question and referring to the checklist.

Implement the processes described in section 5.1.2 to identify waste management system constraints and generic elements for the subject primary function.

Move to the next primary function and repeat the process described in the preceding paragraphs of this section. Repeat that overall process until all branches necessary and sufficient for all primary functions are completed, and all constraints and generic system elements for all primary functions are identified.

5.1.4 Revise and/or augment the checklist as appropriate during the conduct of the analysis.

5.1.5 Perform a "test for completeness" on the functions, constraints and generic system elements. The test is to consist of a limited review of available, related material; the identification of functions, constraints and generic system elements contained or implied in that material that may also be required by the generic HLW management system; and the consideration of those items for inclusion in the subject analysis. Related material is to include:

- Basalt Waste Isolation Project (BWIP) System Functional Analysis Document, DOE-Richland SD-BWI-CR-023, March 20, 1987;
- Waste Management System Requirements Document, Volume IV MGDS, DOE OCRWM, March 1990;
- To the extent applicable, 10 CFR Part 50 and 10 CFR Part 72.

This test may be performed in conjunction with the review(s) required by section 5.1.6.

5.1.6 The product(s) of functional analysis shall be reviewed for three primary attributes: (1) completeness, (2) correctness of content, and (3) clarity of meaning. The sequence of review shall follow the sequence of development described in section 5.1.3 and Figure 1. It is intended that review and verification occur as soon as practicable following development of the subfunctions, constraints and generic repository elements for each primary system function. Preliminary reviews of selected branches may be performed at the direction of the Manager, WSE&I.

Those who perform the review and verification of a functional analysis shall meet two qualification standards: (1) They shall possess the capability in terms of training and experience to have conducted, or to have effectively contributed to the conduct of, the analysis whose results they are reviewing, and (2) they shall not have participated in the conduct of the particular analysis that is the subject of the review.

Specific features to be examined by reviewers are to include, but not necessarily be limited to: (1) adherence to the requirements of sections 4.3 and 5.1.1, (2) appropriate consideration of the candidate functions provided in the checklist, (3) verification that the functions follow from the standard questions of section 5.1.2, (4) adherence to the development requirements of section 5.1.3, and (5) observance of the Exclusions of section 5.3.

5.2 Special Situations

5.2.1 On occasion, it may be beneficial to include in the functional analysis a "dummy" level to simplify the breakdown analysis. For example, in the analysis of the geologic repository it may be useful to make such a "dummy" subdivision on a time or mission phase basis (i.e., preclosure, closure and decommissioning, and postclosure) because of the differences in some functions and conditions during those periods.

5.2.2 It is common to find that the same or closely-related functions appear in more than one branch of the complete structure. On occasion it may be found that the same function is common to the same level of all branches within a larger branch. Where this condition is found, the functions generally should be consolidated and raised to the common

next higher level. This is analogous to a Boolean simplification. This should not be done if it is likely that the functional relationship might be confused or made less obvious. In rare instances, such a commonality may be found to exist at more than one level. In such cases, the function may be consolidated at the highest common level.

5.3 Exclusions

It is important to note that a functional analysis only identifies system mission-dependent functions. A functional analysis does not, and is not intended to perform any of the following.

- Quantify or place specific limits on the functions.

  This is accomplished subsequent to the functional analysis by (1) the allocation of functions to specific system elements and (2) the analysis and allocation of quantitative performance requirements and/or design criteria.

- Identify the relative importance of the functions.

  This is accomplished independently by performance assessments and sensitivity studies. (It should be noted that until appropriate performance assessment models are developed and validated, program needs may dictate the ranking of functions on the basis of expert judgment.)

- Analyze licensing, design, construction or other program activities.

  The functional analysis to be performed under this procedure is limited to the examination of the functions, constraints and generic elements of the physical waste management system. A separate functional analysis of the program would examine program activities such as those above. (Reference sections 2.1 and 2.2 under DEFINITIONS, and section 4.1.)

- Identify specific structures, systems, subsystems or components that may perform required functions, or designs therefor.

  Such allocation of functions and design analysis is beyond the scope of functional analysis and NRC activities and is the responsibility of the DOE. On occasion, examples of subsystems or components commonly used to perform a given function may by cited, but only for the purpose of aiding the understanding of the description of the function.

- Identify functions unique to (1) environmental impact, (2) socioeconomic questions, or (3) licensing procedures.

  These concerns act as requirements or constraints on site selection, design approach and/or the licensing process; that is, on activities of the program that will authorize and produce the system. Functions that are common to the HLW management system mission and the above concerns are included in the system functional analysis. However, any environmental, socioeconomic, or licensing functions that are not related to radiological health and safety performance of the system and are not necessary for the physical isolation of waste, lie outside the scope of the waste management system mission.

6. FORMAT GUIDE FOR THE FUNCTIONAL ANALYSIS

The functions identified in the functional analysis shall be recorded in a numbered, hierarchical, textual list format indented for each level of the structure. This list may be translated to a graphical format such as that shown in Figure 2; however, such translation is not required for an analysis performed in accordance with this procedure.

7. RECORDS

Records shall be developed and maintained in accordance with TOP-001, and the general provisions of Chapters 5 and 17 of the Center Quality Assurance Manual (CQAM). The function list and, if prepared, the function diagrams, identified in section 6 above, shall be maintained by the WSE&I Element Manager.

8. QUALITY ASSURANCE

8.1 Quality Assurance shall verify, through independent surveillance, reviews or audits, that this procedure is implemented and followed by Center personnel in the performance of functional analysis, and in the development and maintenance of function lists and, if prepared, function diagrams identified in section 6 above.

8.2 Function list and/or function diagrams together with supporting text that are submitted to the NRC shall be certified by a Quality Assurance review and sent to the appropriate NRC office in the form requested by the NRC.

8.3 Either electronic or hardcopy objective evidence is acceptable for independent verification of actions taken in executing this procedure. Records shall be maintained of audits performed on the activities related to this procedure.

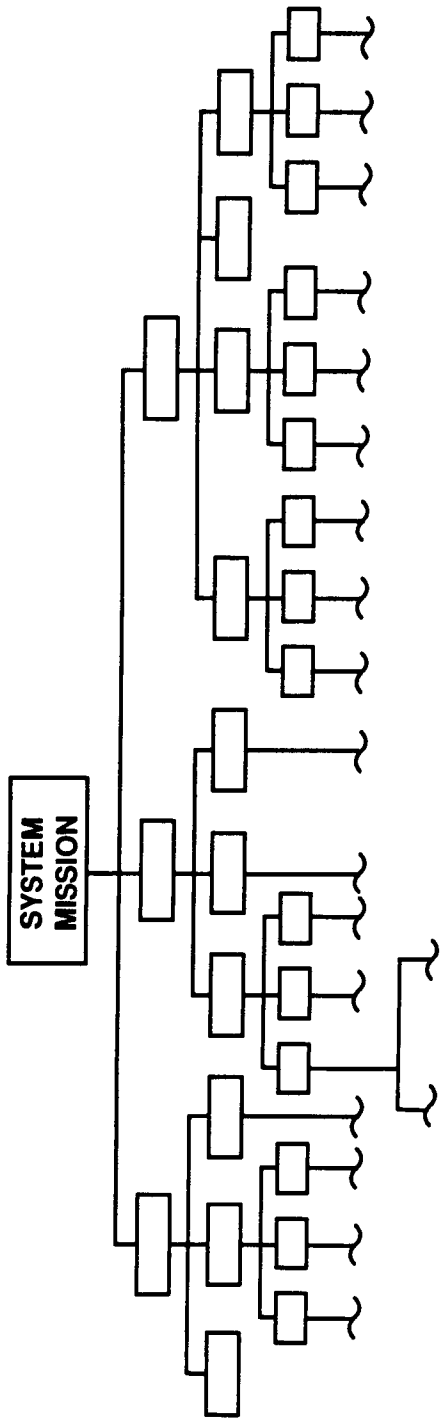

FIGURE 2. GENERAL STRUCTURE OF A FUNCTIONAL REQUIREMENTS TREE

ATTACHMENT A

REPOSITORY FUNCTIONAL ANALYSIS CHECKLIST

The purpose of this Checklist is to identify generally applicable functions, constraints and generic system elements for consideration in the conduct of the repository segment of the HLW Management System Functional Analysis.

This Checklist is not intended to limit the functions, constraints and generic system elements considered by the analysts. The Checklist may be augmented during the conduct of the analysis as other common items are identified.

The following functions, constraints and generic system elements are to be considered for inclusion by the analysts in appropriate branches and levels of the functional analysis. It is not necessary that these descriptions be used verbatim. They are intended, rather, to stimulate discussion during the conduct of the functional analysis.

1. **PLANNING**

   Plan overall waste management system operations

   Plan for (name of specific operation) normal operations

   Plan for accident/emergency contingencies in (name of specific operation) operations

   Plan for emergency evacuation of workers and the public during (name of specific operation)

   Plan for (specific facility) closure and/or decommissioning

2. **OPERATIONS**

   Isolate waste operations air from construction areas during concurrent operations

   Protect the waste container/package from physical damage during (name of specific operation)

   Protect container during transfer of waste container/package (e.g., provide transfer cask)

   Dissipate momentum of run-away waste package conveyance in a controlled manner

Respond to nuclear and non-nuclear accidents

Restore system to operating condition following nuclear and non-nuclear accidents

Provide onsite fire prevention measures

Contain and control onsite fires

Provide backup emergency support services from offsite

Conduct quality assurance program

Ensure site security

- Control access to site
- Detect intrusion
- Neutralize intruders
- Prevent and detect acts of theft, sabotage, or terrorism
- Enforce security requirements

Provide investigative services

Limit safety-related secondary effects of industrial hazards during (name of specific operation)

Designate boundaries of the controlled area

Ensure (name of specific operation) facilities and equipment operability

Ensure stability of (name of specific operation) facilities under local soil conditions

Ensure ability of (name of specific operation) facilities to perform intended functions under naturally induced conditions (e.g., weather, seismic activity)

Ensure ability of (name of specific operation) facilities to perform intended functions under conditions induced by human activity

Ensure stability of underground facility

Ensure stability of access and ventilation drifts, emplacement panels and openings, test areas, and subsurface support facility openings (drifts and rooms)

3. **NUCLEAR SAFEGUARDS**

Prevent nuclear criticality

Limit release(s) of radionuclides during (name of specific operation)

Limit personnel radiation exposure during (name of specific operation)

Isolate and decontaminate in event of containment loss during (name of specific operation)

Limit release producing damage to waste during (name of specific operation)

Limit off-site release(s) of radionuclides during (name of specific operation)

Limit releases to geologic setting during (name of specific operation)

Limit releases within controlled area during (name of specific operation)

Reestablish containment in event of release during (name of specific operation)

Limit external dose rate during (name of specific operation)

Limit spread of contamination in event of radionuclide release during (name of specific operation)

Decontaminate emplacement opening in event of container breach during emplacement

Contain radionuclides during waste container/package retrieval

Monitor conditions that may impact radioactive releases and/or containment

Plan, and if required, implement radiological emergency response during (name of specific operation)

Limit gaseous radionuclide release rate(s)

Plan for unforeseen loss or potential loss of containment contingencies

Limit exposure to direct radiation or shine from unshielded waste container/package

Decontaminate transfer cask surface as required

Collect and dispose of contaminated packing/rock as required

Decontaminate/immobilize contamination to safe levels for dismantling of unsalvageable material

Collect, classify, package, transport and dispose of decontaminants

4. **PERFORMANCE**

Limit alterations of the geologic media that adversely affect performance

Limit alterations of the hydrologic regime that adversely affect performance

Limit alterations of existing discontinuities that adversely affect performance (preferential pathways to the surface, or to or between aquifers)

Limit creation of new discontinuities that adversely affect performance (preferential pathways to the surface, or to or between aquifers)

Limit extensions of discontinuities and/or enlargements of their aperatures that adversely affect performance

Limit proximity of openings and drill holes to preferential pathways

Limit adverse effects on geochemistry

Limit addition of materials to the underground facility that enhance container corrosion or radionuclide migration

Limit deposition of salts in very near-field

Limit addition of radionuclide complexants and reactants

Ensure safety and integrity of waste container/package during transfer to/from underground facility

Contain radionuclides under handling and accident conditions during waste transfer

Contain airborne radionuclides generated during waste preparation

Contain radioactive products in fluids generated during waste preparation

Contain radionuclides under waste container/package loads due to emplacement

Limit radionuclide migration through seals

Limit radionuclide migration through seal/host rock interface(s)

Limit nuclide migration through disturbed rock zone at the seals

5. **GENERIC SYSTEM ELEMENTS**

Facilities - Surface

Ventilation and air conditioning for (name of specific operation) facilities

Secure storage for certified/calibrated material/equipment

Facility to prepare for disposal those secondary wastes generated during (name of specific operation)

Facilities and equipment for normal and radioactive facility and equipment maintenance

Surface facilities and equipment for emergency subsurface escape/rescue

Facilities - Underground

Opening(s) for subsurface support facilities

Subsurface ventilation and air conditioning

Emergency escape/rescue access/egress

Station(s) and related opening(s) for emergency escape/rescue

Emergency escape/rescue routes and refuges

Equipment - Surface and Common

Security facilities and equipment

Surface physical barriers to unauthorized entry

Surface unauthorized entry detection and monitoring

Security enforcement facilities and equipment

Security communications facilities and equipment

Intrusion detection equipment for secure areas

General area surveillance equipment where required

Ventilation exhaust air treatment equipment

Repository communications network [onsite and interface(s) with offsite]

Safety communications facilities and equipment

Data transmission lines

Standby power source(s); e.g., generator(s)

Standby power source(s) for emergency escape/rescue

Uninterruptable power for instrumentation, communications, and essential lighting

Uninterruptable power for supervisory, communications, and lighting subsystems that cannot tolerate momentary power interruptions

Equipment for fire protection water storage, pressurization, and distribution to individual facilities

Equipment for fire detection and alarm in areas with combustible material or gases

Radiation monitoring and alarm equipment

Seismic/acoustic monitoring equipment

Hazardous nonradioactive material(s) monitoring and alarm equipment

Surface area and perimeter radiation monitoring equipment

Equipment for radiological emergencies

Local radiation detection/monitoring equipment

Emergency alarm

Surface and subsurface general safety equipment

Decontamination services (facilities, equipment, supplies and personnel)

Emergency personnel decontamination stations--surface and subsurface

Equipment for contingency/emergency conditions

Auxiliary and emergency escape/rescue transfer conveyance(s)

Equipment for preparation of secondary waste for disposal

Facility and equipment to dispose of contaminated by-products

Storage facility and equipment for contaminated by products

Computational capability for (name of specific operation)

Equipment - Underground

Subsurface utility and communications distribution facilities and equipment

Subsurface ventilation monitoring and alarm equipment

Subsurface emergency personal air supply(ies)

Subsurface equipment for emergency escape/rescue

Container for transport of loose (unpacked) contaminated solids from underground facility to surface

Equipment for loading and off-loading (potentially damaged) retrieved waste container/package on and off underground waste conveyance

Software

Software for (name of specific operation)

Personnel

Trained and certified personnel for (name of specific operation) contingency/emergency conditions

Trained and certified personnel for (name of specific operation) facility and equipment maintenance

Procedures

Procedures for normal (name of specific operation) operating processes

Procedures for (name of specific operation) contingency/emergency conditions

General

Facilities, equipment, spares and material for (name of specific operation) facility and equipment maintenance

Industrial waste disposal during (name of specific operation)

CENTER FOR NUCLEAR WASTE REGULATORY ANALYSES TECHNICAL OPERATING PROCEDURE	Proc. TOP-001-07 Revision 1 Page 1 of 1

Title PROCEDURE FOR HIGH-LEVEL WASTE MANAGEMENT SYSTEM FUNCTIONAL ANALYSIS

EFFECTIVITY

Revision 1 of this procedure makes this procedure obsolete. This procedure consists of the pages and changes listed below.

Page No.	Change No.	Date Effective
1	0	12/08/2000

NOTE: This procedure, TOP-001-07, has been withdrawn from use at the CNWRA.

Please remove and destroy the referenced procedure in your notebook/holder and return the acknowledgment page to CNWRA Document Control with your signature and date.

SUPERSEDED

Supersedes Procedure No. N/A

Approvals			
Written by David Turner	Date 12/8/2000	Technical Review Pat Mackin	Date 12/11/2000
Quality Assurance Bruce Mabrito	Date 12/8/2000	Cognizant Director Budhi Sagar	Date 12/8/2000

CNWRA Form TOP-1 (8/93)