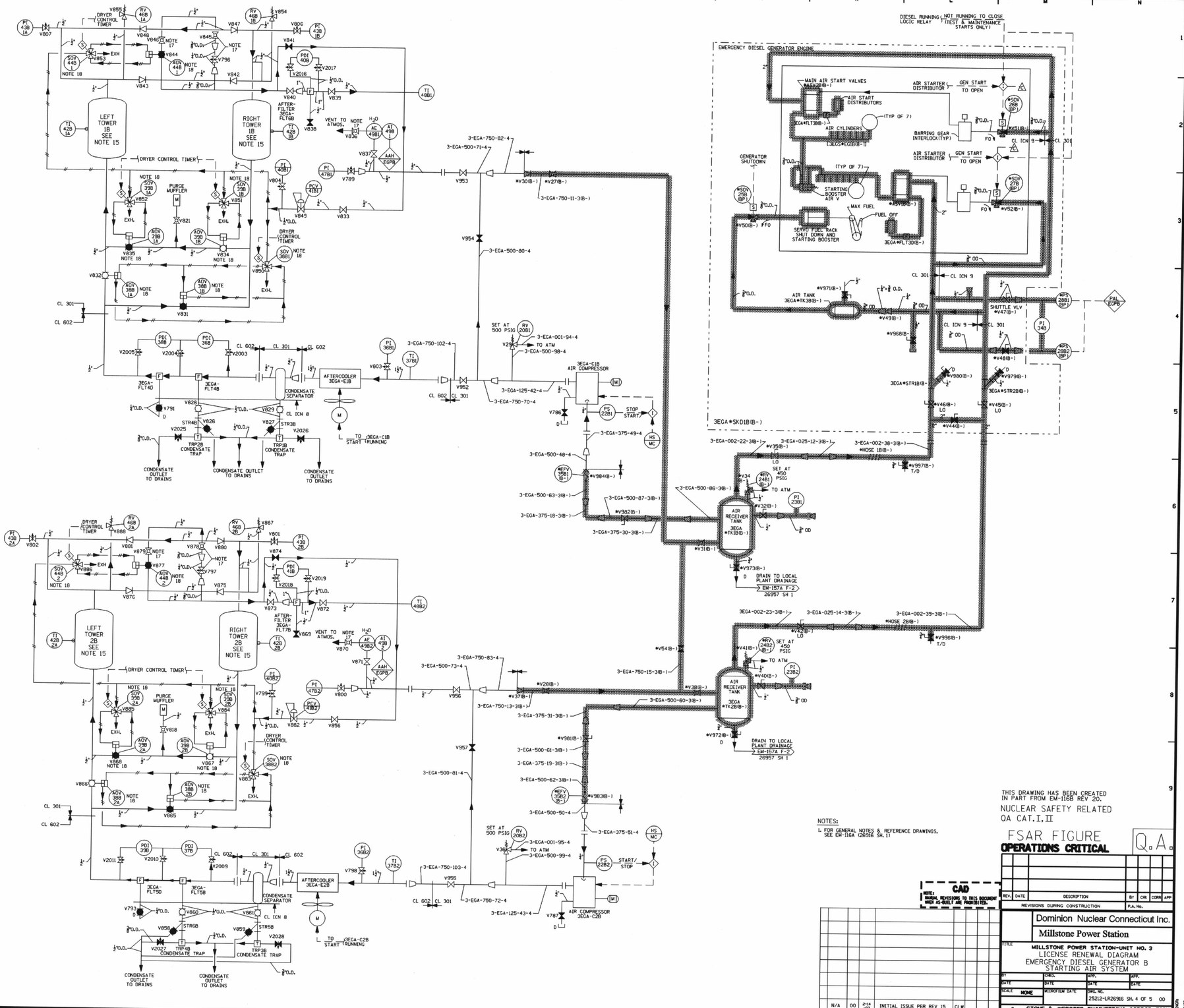

Submitted by AHLUWALIAC on Wednesday January 07 2004 at 11:06:34 AM EST