12179-EM-116B

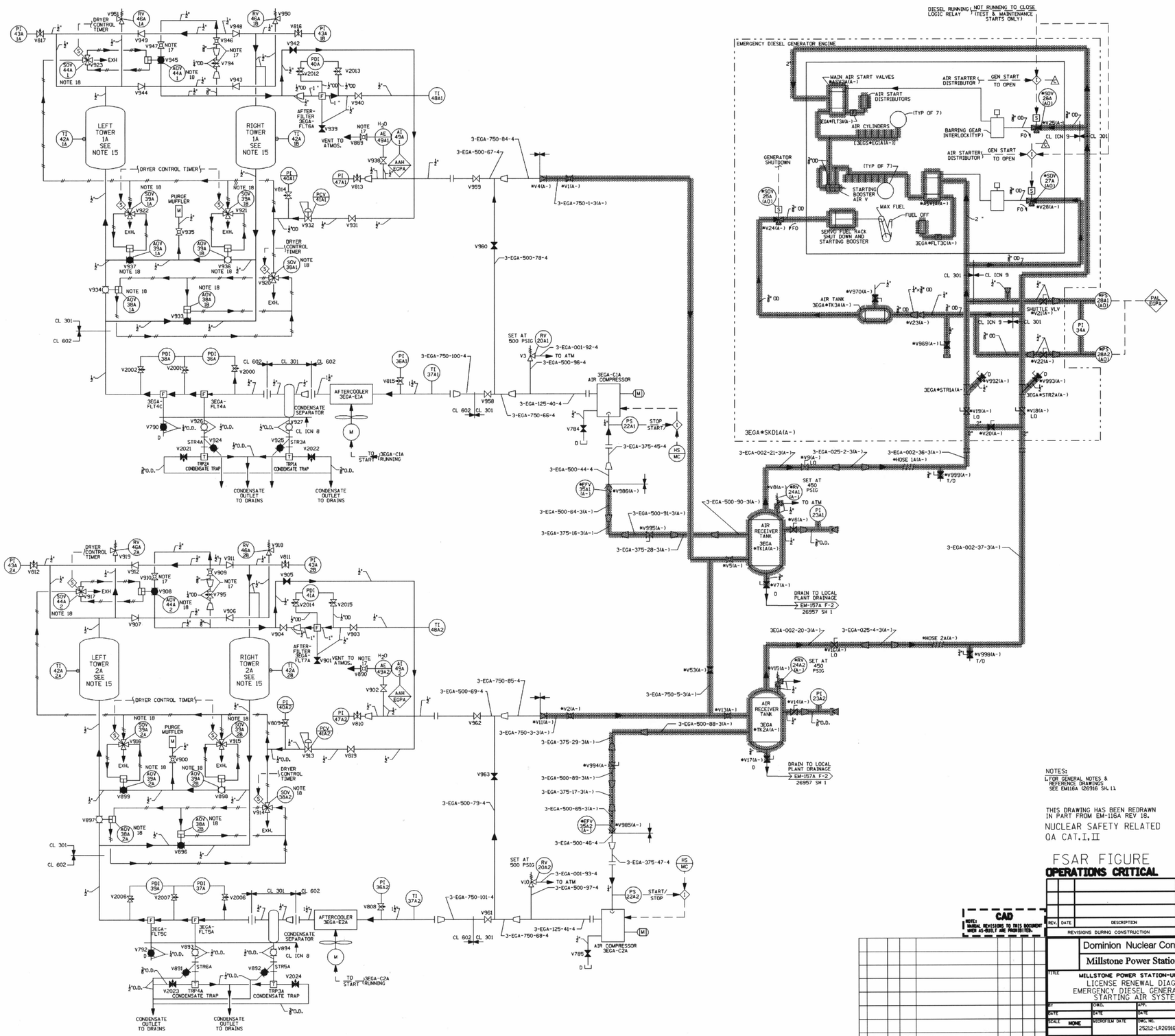

NOTES:
1. FOR GENERAL NOTES & REFERENCE DRAWINGS SEE EM16A 26916 SH. 11

THIS DRAWING HAS BEEN REDRAWN IN PART FROM EM-116A REV 18.

NUCLEAR SAFETY RELATED
QA CAT. I, II

FSAR FIGURE
OPERATIONS CRITICAL

Q.A.

NOTE: MANUAL REVISIONS TO THIS DOCUMENT WHEN AS-BUILT ARE PROHIBITED.

CAD

REV.	DATE	DESCRIPTION	BY	CHK.	CORR.	APP.
		REVISIONS DURING CONSTRUCTION		P.A. No.		

Dominion Nuclear Connecticut Inc.

Millstone Power Station

TITLE: MILLSTONE POWER STATION-UNIT NO. 3
LICENSE RENEWAL DIAGRAM
EMERGENCY DIESEL GENERATOR A
STARTING AIR SYSTEM

BY	CHKD.	APP.	APP.
DATE	DATE	DATE	DATE
SCALE NONE	MICROFILM DATE	DWG. NO. 25212-LR26916 SH. 2 OF 5	00

STONE & WEBSTER ENGINEERING CORPORATION
BOSTON, MASS.

P.A.#	NO.	DATE	REVISIONS	BY	CHK.	CORR.	APP.
N/A	00	2-13-92	INITIAL ISSUE PER REV 33	CLW			

ISSUED FOR MASTER DRAWING: 25212-26916 SH. 2 OF 5 REV 33

S&W DWG. NO. 12179-EM- 116B

DRAWN BY: CHECKED BY:

REF. DWGS. SCHEMATIC/F.FORTINI
SCHL. DWGS. F.K.O./A.TTIS

COMPONENTS SUBJECT TO AGING MANAGEMENT REVIEW
3346A EMERGENCY DIESEL GENERATORS

NOTE: SOME SHADED LINES MAY CONTAIN COMPONENTS FROM MORE THAN ONE SYSTEM.

D139

Submitted by AHLUWALIAC on Wednesday January 07 2004 at 11:06:46 AM EST