12179-EM-113B

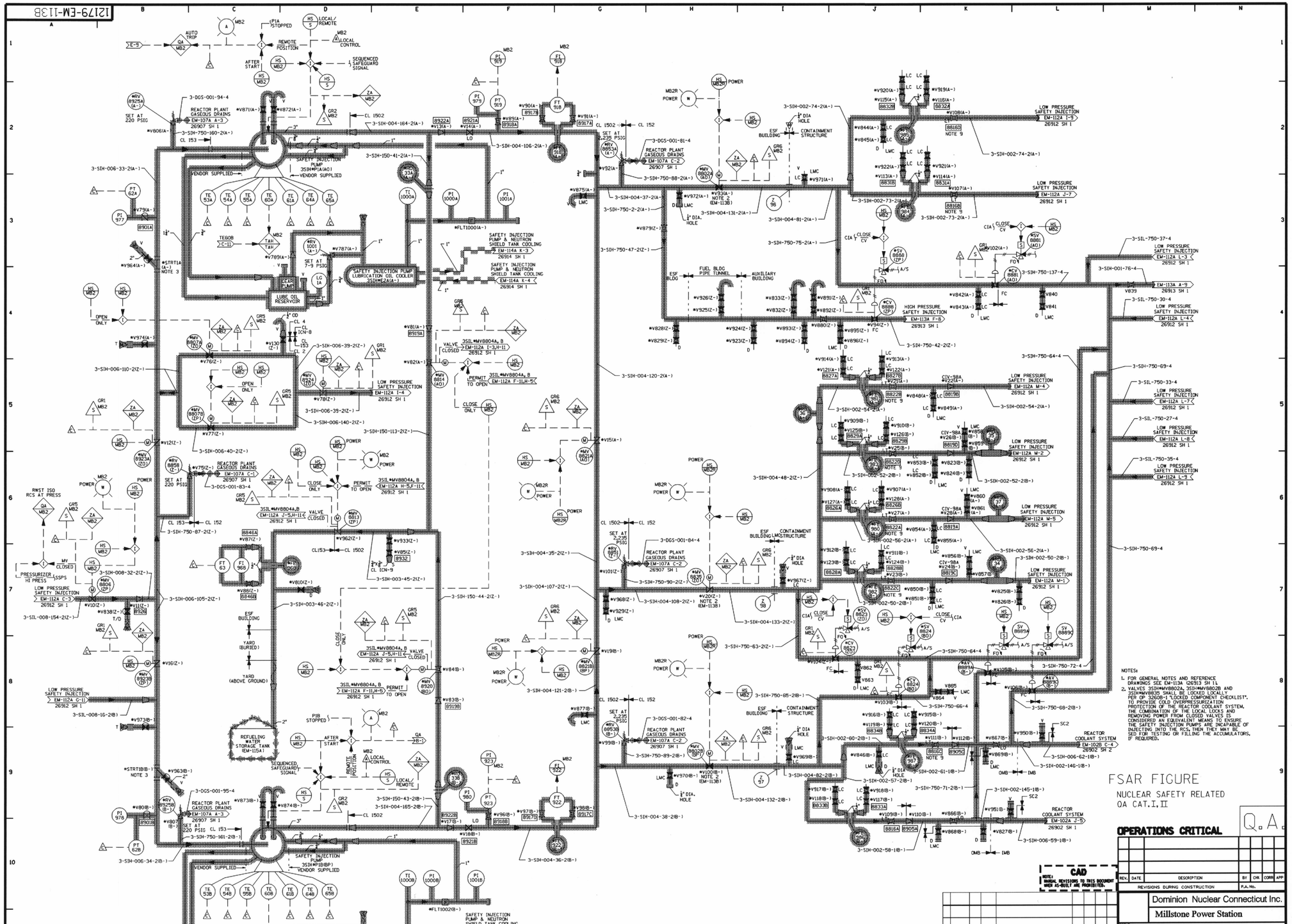

NOTES:
1. FOR GENERAL NOTES AND REFERENCE DRAWINGS SEE EM-113A Q6913 SH 1L
2. VALVES 3SIH*MV8802A, 3SIH*MV8802B AND 3SIH*MV8835 SHALL BE LOCKED LOCALLY PER OP 3260B-1 "LOCKED COMPONENT CHECKLIST". TO PROVIDE COLD OVERPRESSURIZATION PROTECTION OF THE REACTOR COOLANT SYSTEM, THE COMBINATION OF THE LOCAL LOCKS AND REMOVING POWER FROM CLOSED VALVES IS CONSIDERED AN EQUIVALENT MEANS TO ENSURE THE SAFETY INJECTION PUMPS ARE INCAPABLE OF INJECTING INTO THE RCS. THEN THEY MAY BE SED FOR TESTING OR FILLING THE ACCUMULATORS, IF REQUIRED.

FSAR FIGURE
NUCLEAR SAFETY RELATED
QA CAT.I,II

OPERATIONS CRITICAL

Q.A.

L. R. NOTES:
1. SYSTEM 3305G INCLUDES 3307A AND 3308.

COMPONENTS SUBJECT TO AGING MANAGEMENT REVIEW	
3305G	SAFETY INJECTION
3335A	REACTOR PLANT GASEOUS DRAINS
3381	QUENCH SPRAY
3338E	SAFETY INJECTION PUMP COOLING

NOTE: SOME SHADED LINES MAY CONTAIN COMPONENTS FROM MORE THAN ONE SYSTEM.

CAD
NOTE: MANUAL REVISIONS TO THIS DOCUMENT WHICH AS-BUILT ARE PROHIBITED.

REV.	DATE	DESCRIPTION	BY	CHK.	CORR.	APP.
N/A	00	4-16-02	INITIAL ISSUE PER REV 31	CLW		

REVISIONS DURING CONSTRUCTION — P.A. No.

Dominion Nuclear Connecticut Inc.
Millstone Power Station
TITLE: MILLSTONE POWER STATION-UNIT NO. 3
LICENSE RENEWAL DIAGRAM
HIGH PRESSURE SAFETY INJECTION

BY / DATE — CHKD. / DATE — APP. / DATE — APP. / DATE
SCALE NONE — MICROFILM DATE — DWG. NO. 25212-LR26913 SH. 2 OF 2 00

STONE & WEBSTER ENGINEERING CORPORATION
BOSTON, MASS.

REV. P.A.# NO. DATE REVISIONS BY CHK. CORR. APP.
ISSUED PER MASTER DRAWING 25212-26913 SH. 2 OF 2 — REV 31

S&W DWG. NO. 12179-EM-113B

DRAWN BY: CHECKED BY:

REF. DWG. SHEET: F-FGT1N1
DESIG. DWG. NO.: F-FCD_L1T15

D135

Submitted by AHLUWALIAC on Wednesday January 07 2004 at 11:07:10 AM EST