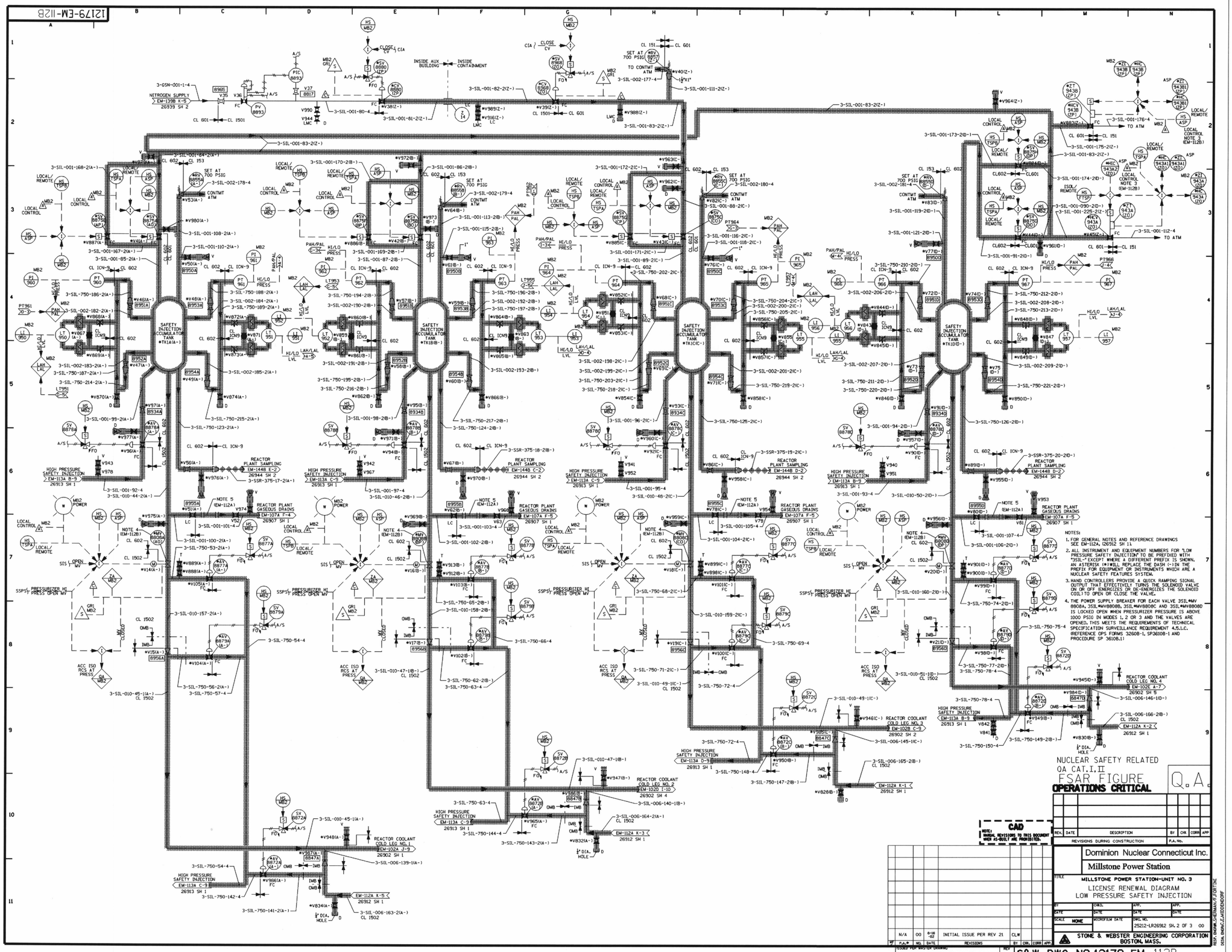

Submitted by AHLUWALIAC on Wednesday January 07 2004 at 11:07:28 AM EST