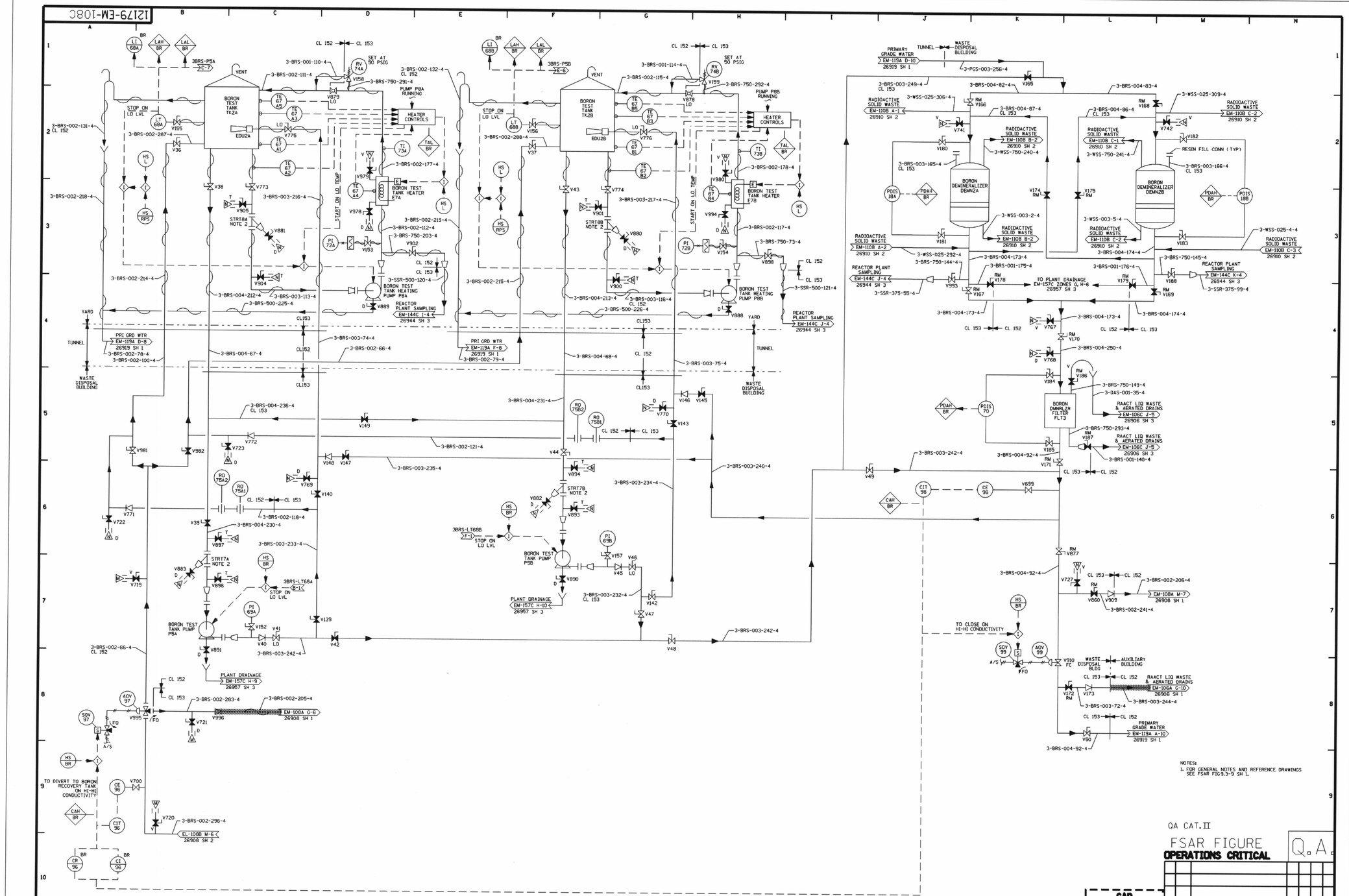

D24

Submitted by AHLUWALIAC on Wednesday January 07 2004 at 11:11:36 AM EST