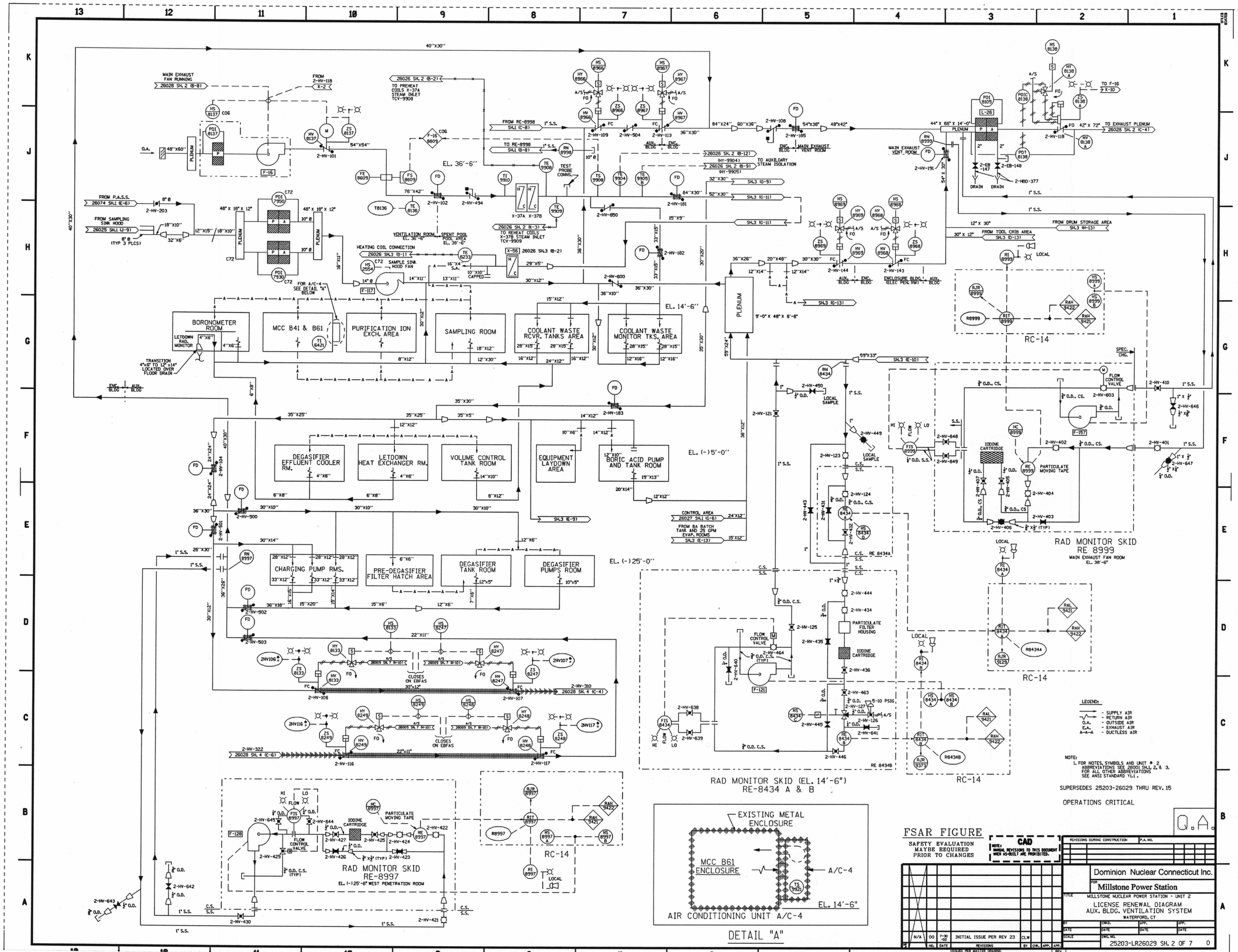

Submitted by SEKULIC on Monday December 22 2003 at 07:35:46 AM EST