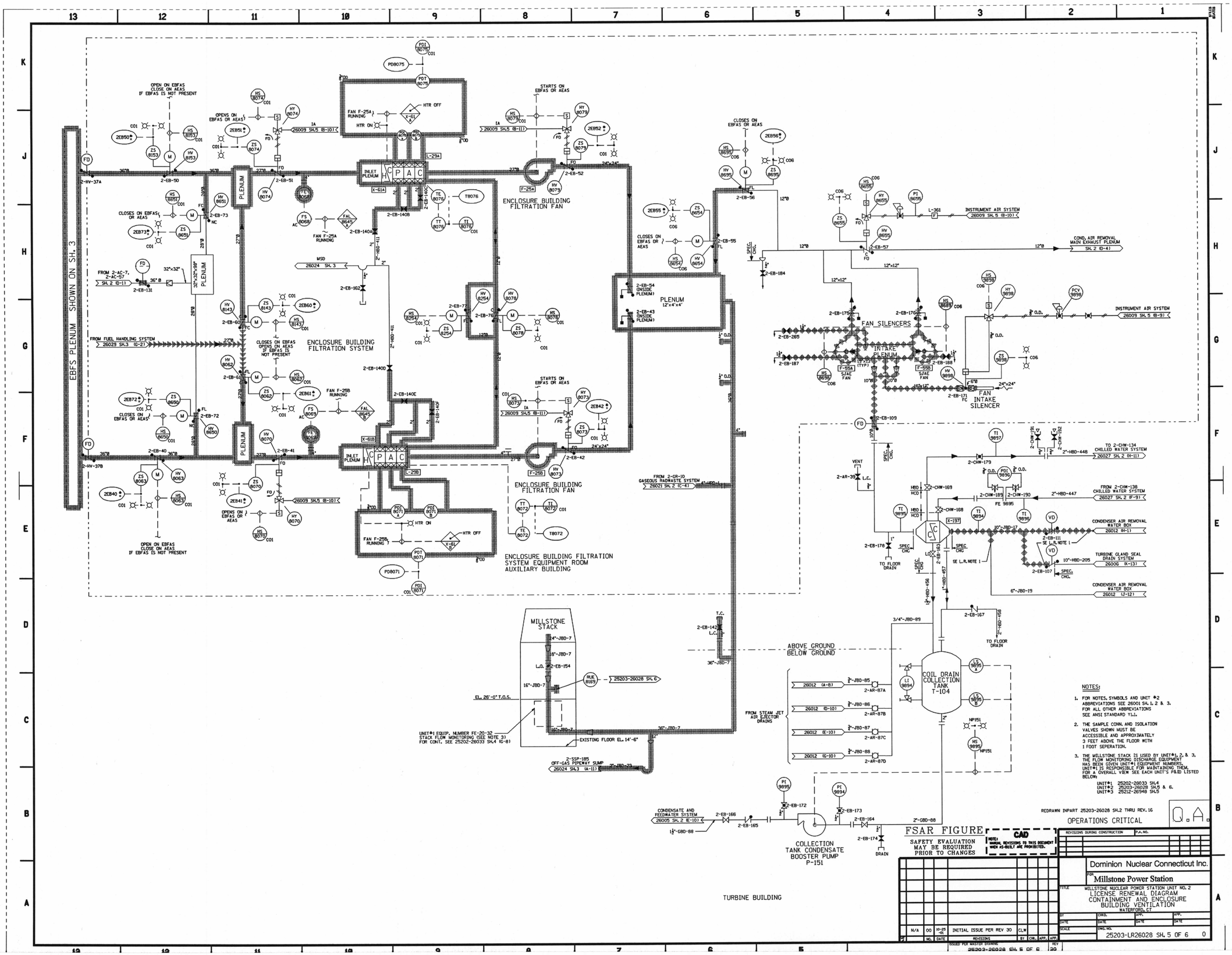

NOTES:

1. FOR NOTES, SYMBOLS AND UNIT #2 ABBREVIATIONS SEE 26001 SH. 1, 2 & 3. FOR ALL OTHER ABBREVIATIONS SEE ANSI STANDARD Y1.1.
2. THE SAMPLE CONN. AND ISOLATION VALVES SHOWN MUST BE ACCESSIBLE AND APPROXIMATELY 3 FEET ABOVE THE FLOOR WITH 1 FOOT SEPERATION.
3. THE MILLSTONE STACK IS USED BY UNIT#1, 2, & 3. THE FLOW MONITORING DISCHARGE EQUIPMENT HAS BEEN GIVEN UNIT#1 EQUIPMENT NUMBERS. UNIT#1 IS RESPONSIBLE FOR MAINTAINING THEM. FOR A OVERALL VIEW SEE EACH UNIT'S P&ID LISTED BELOW.

UNIT#1 25202-26033 SH.4
UNIT#2 25203-26028 SH.5 & 6.
UNIT#3 25212-26948 SH.5

REDRAWN INPART 25203-26028 SH.2 THRU REV. 16

OPERATIONS CRITICAL

Q.A.

FSAR FIGURE

SAFETY EVALUATION MAY BE REQUIRED PRIOR TO CHANGES

CAD

NOTE: MANUAL REVISIONS TO THIS DOCUMENT WHEN AS-BUILT ARE PROHIBITED.

REVISIONS DURING CONSTRUCTION	P.A. NO.

NO.	DATE	REVISIONS	BY	CHK.	APP.
N/A	00	10-25-01 INITIAL ISSUE PER REV 30	CLW		

ISSUED FOR MASTER DRAWING REV 30

Dominion Nuclear Connecticut Inc.

FOR Millstone Power Station

TITLE MILLSTONE NUCLEAR POWER STATION UNIT NO. 2
LICENSE RENEWAL DIAGRAM
CONTAINMENT AND ENCLOSURE BUILDING VENTILATION
WATERFORD, CT

BY	CHKD.	DWG.	APP.
DATE	DATE	DATE	DATE
SCALE	DWG. NO. 25203-LR26028 SH. 5 OF 6		0

D-074

L.R. NOTES:
L LINES RUN THROUGH A VITAL AREA IN THE TURBINE BUILDING. AUXILIARY FEEDWATER PIPING AND VALVE ARE INSIDE THE FENCED VITAL AREA. THE FENCE DEPICTS THE BOUNDARY.

COMPONENTS SUBJECT TO AGING MANAGEMENT REVIEW

2314G	ENCLOSURE BLDG FILTRATION
2321	MAIN CONDENSER EVACUATION
2314F	FUEL HANDLING AREA VENTILATION

NOTE: SOME SHADED LINES MAY CONTAIN COMPONENTS FROM MORE THAN ONE SYSTEM.

Submitted by SEKULIC on Monday December 22 2003 at 07:35:58 AM EST