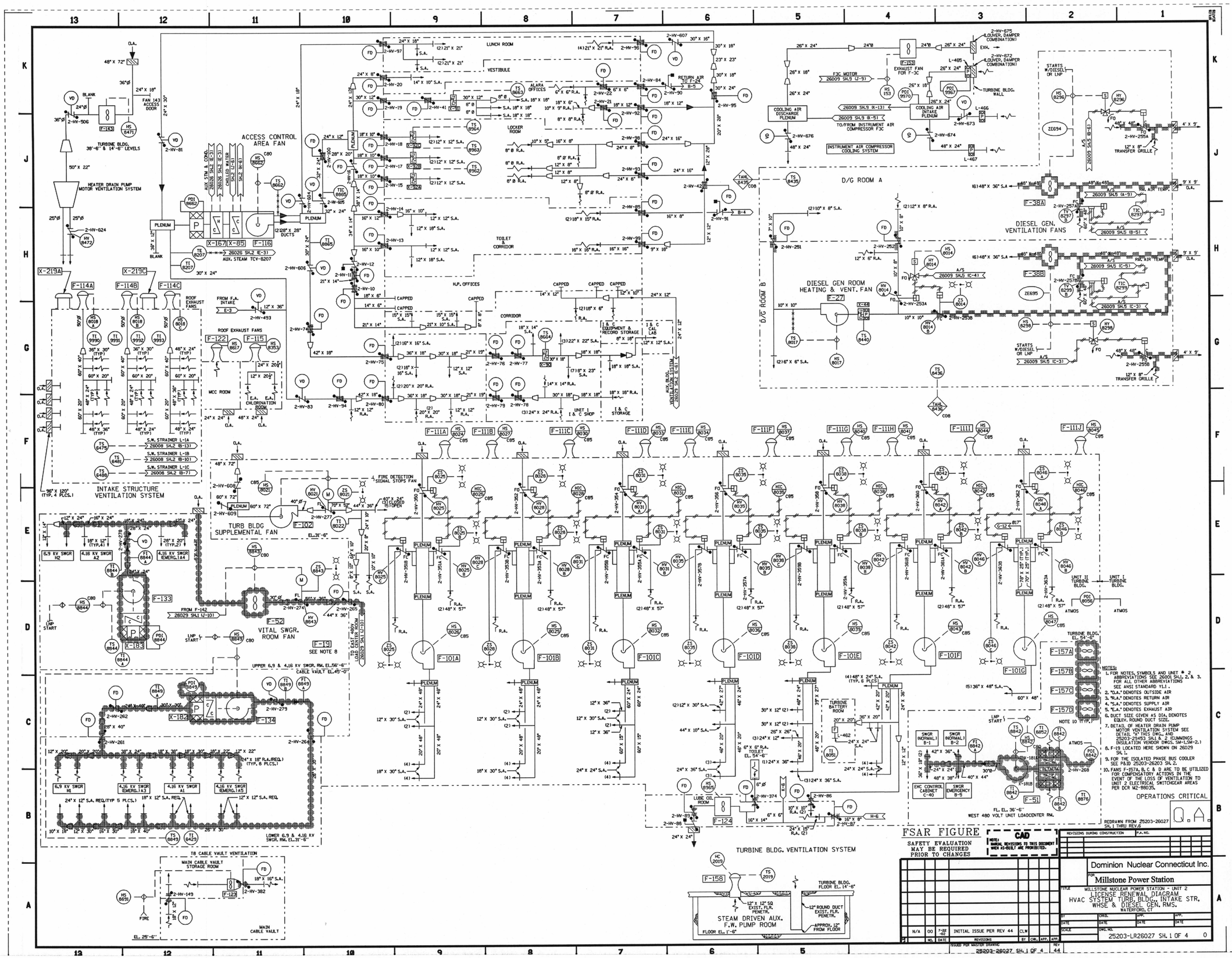

Submitted by SEKULIC on Monday December 22 2003 at 07:36:45 AM EST

D067