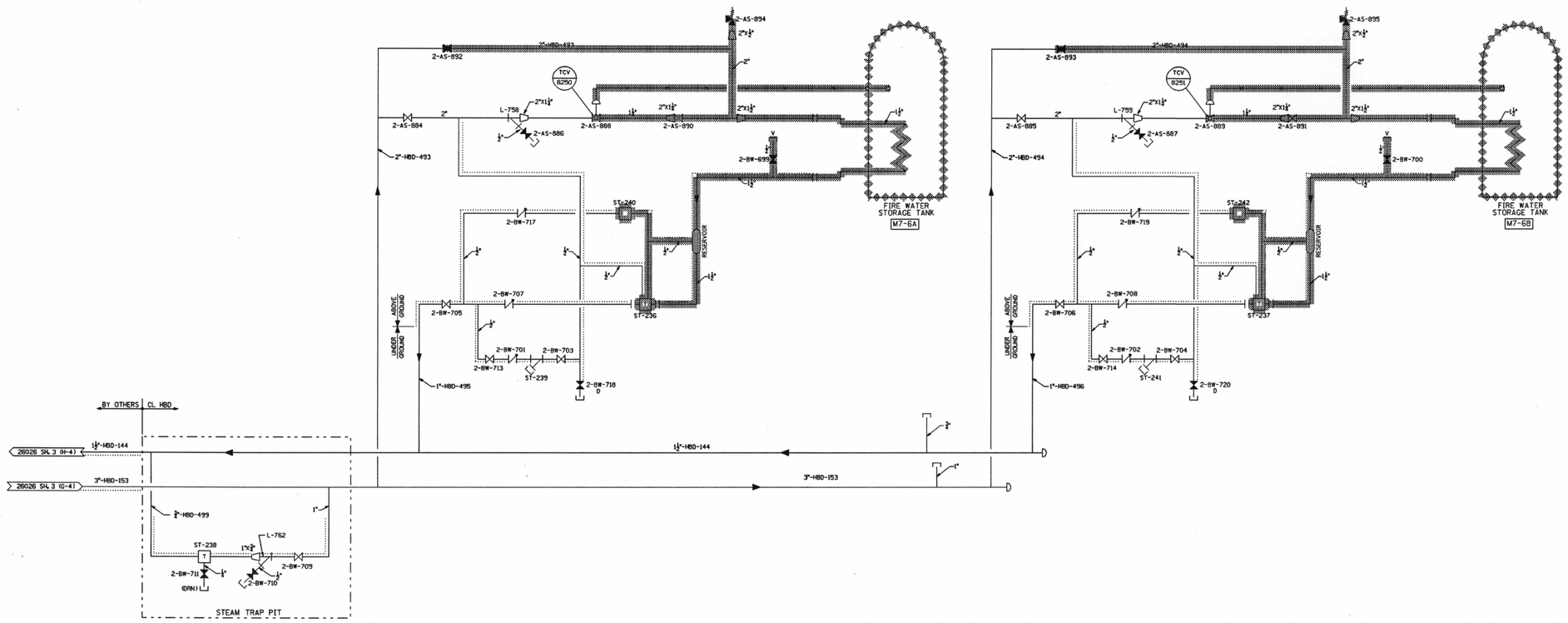

NOTES:

1. FOR NOTES, SYMBOLS AND UNIT #2 ABBREVIATIONS SEE 25001 SH. 1, 2 & 3. FOR ALL OTHER ABBREVIATIONS SEE ANSI STANDARD Y.1.

FSAR FIGURE

SAFETY EVALUATION MAYBE REQUIRED PRIOR TO CHANGES

CAD

NOTE: MANUAL REVISIONS TO THIS DOCUMENT WHEN AS-BUILT ARE PROHIBITED.

OPERATIONS CRITICAL

NON Q.A.

REVISIONS DURING CONSTRUCTION	P.A. NO.

SY	NO.	DATE	REVISIONS	BY	CHK.	APP.	APP.
N/A	00	2-28-02	INITIAL ISSUE PER REV 1	CLW			

ISSUED FOR MASTER DRAWING — REV

Dominion Nuclear Connecticut Inc.

FOR Millstone Power Station

TITLE MILLSTONE NUCLEAR POWER STATION UNIT 2
LICENSE RENEWAL DIAGRAM
AUXILIARY STEAM AND CONDENSATE
WATERFORD, CT

BY	CHKD.	APP.	APP.
DATE	DATE	DATE	DATE

SCALE — DWG. NO. 25203-LR26026 SH. 5 OF 5 — 0

COMPONENTS SUBJECT TO AGING MANAGEMENT REVIEW	
233A	PLANT HEATING & CONDENSATE RECOVERY
334L	FIRE PROTECTION

NOTE: SOME SHADED LINES MAY CONTAIN COMPONENTS FROM MORE THAN ONE SYSTEM.

D066

Submitted by SEKULIC on Monday December 22 2003 at 07:36:51 AM EST