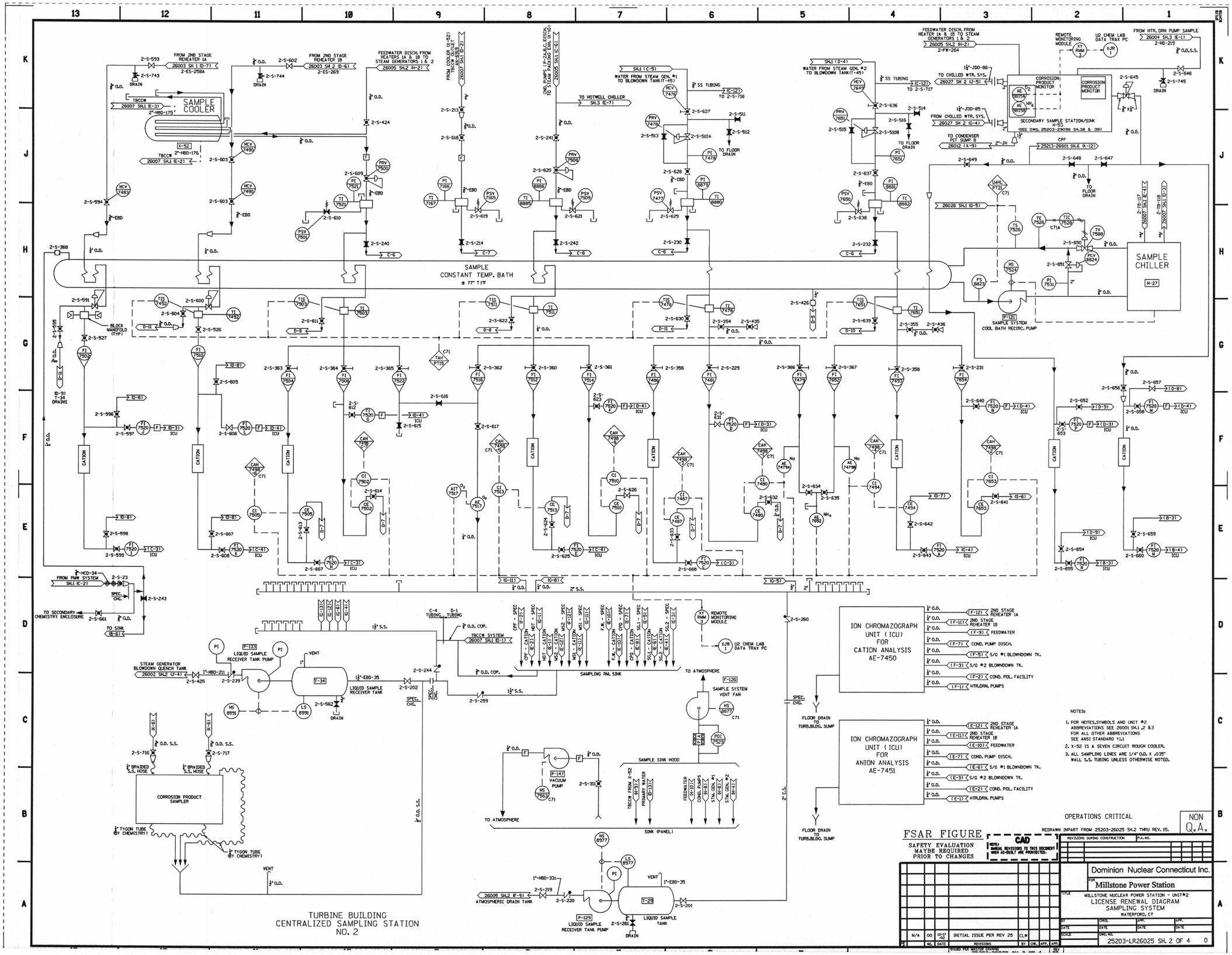

Submitted by SEKULIC on Monday December 22 2003 at 07:37:21 AM EST

D061