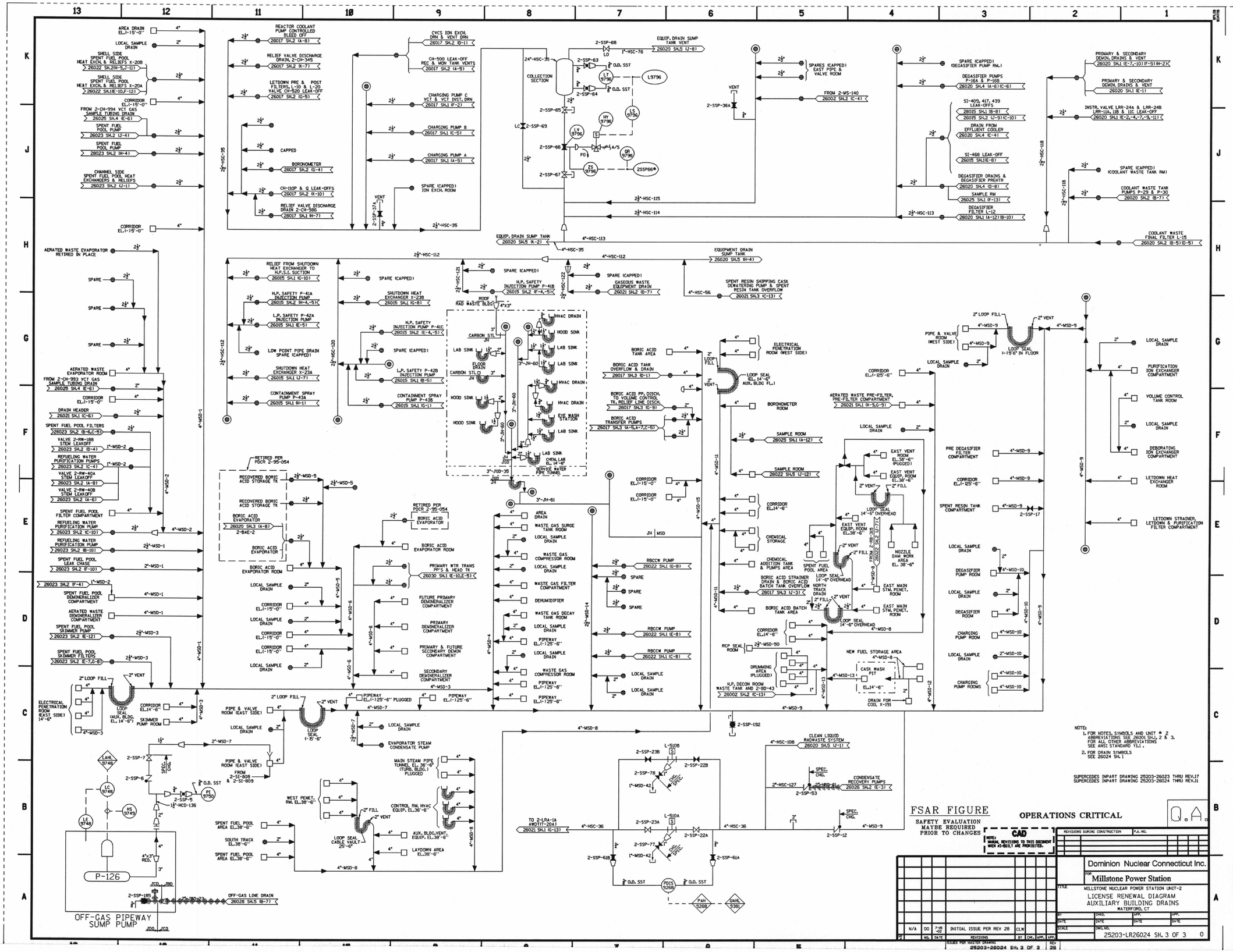

Submitted by SEKULIC on Monday December 22 2003 at 07:37:33 AM EST

MD059