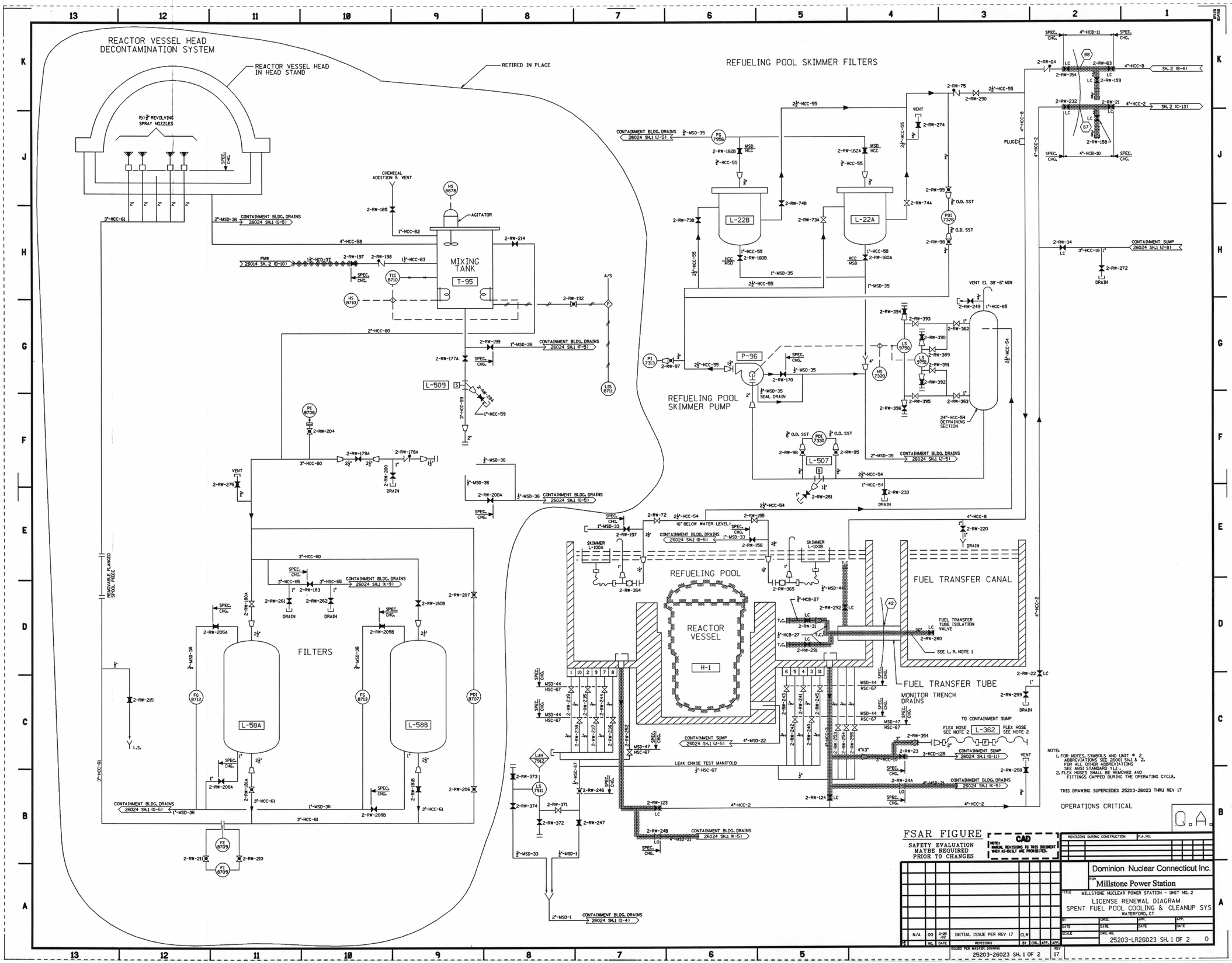

Submitted by SEKULIC on Monday December 22 2003 at 07:38:02 AM EST

DOSS