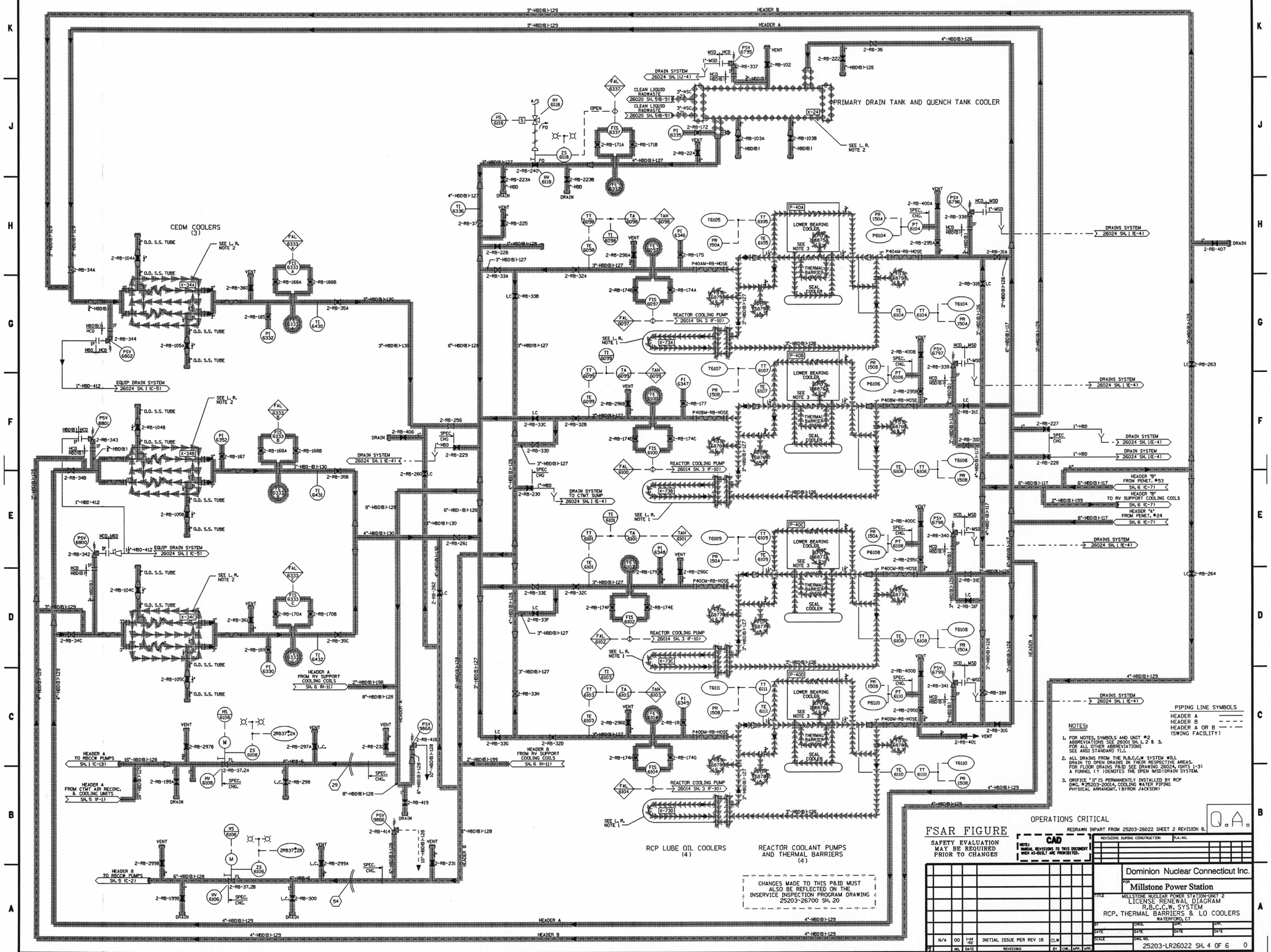

Submitted by SEKULIC on Monday December 22 2003 at 07:38:20 AM EST

D052