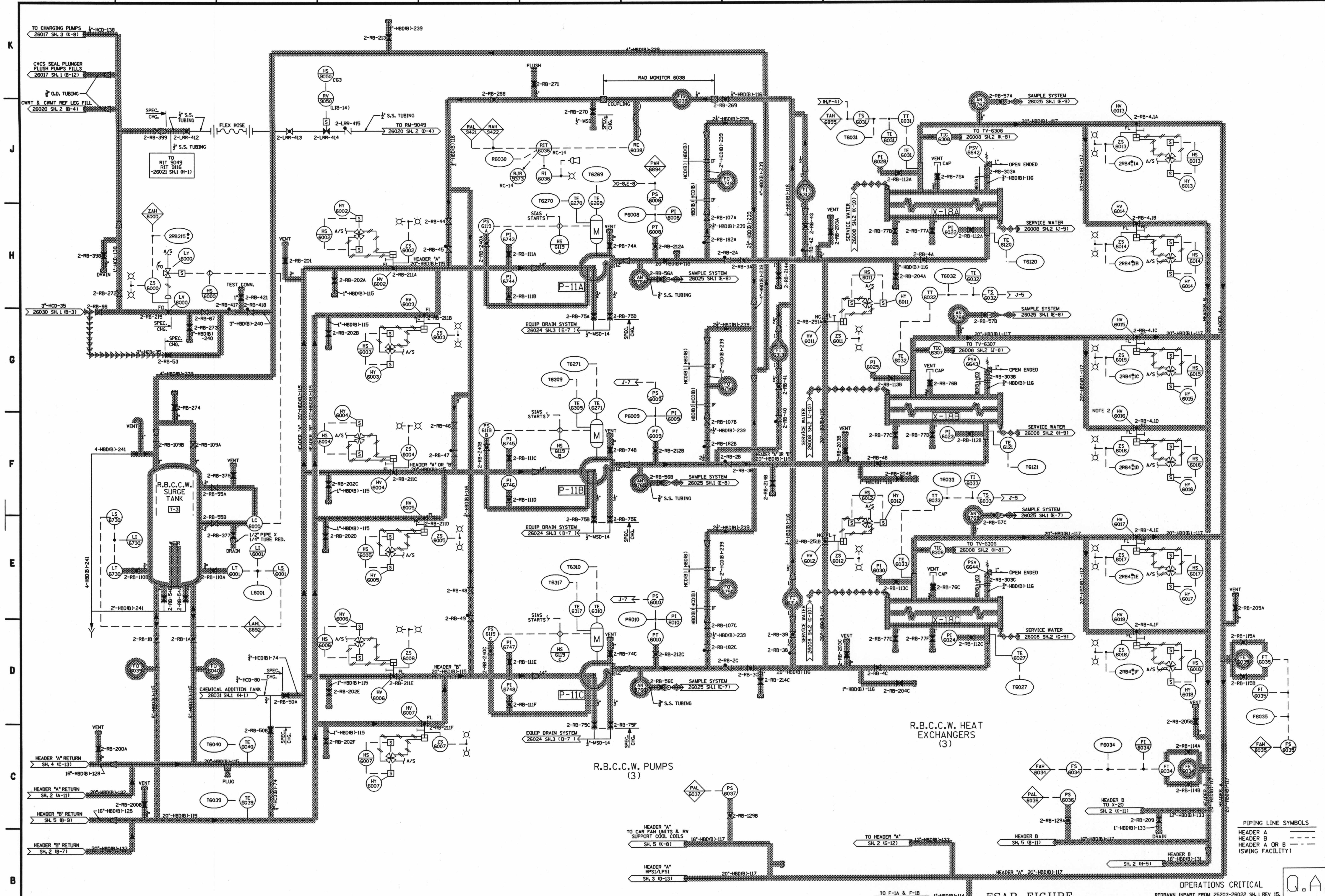

PIPING LINE SYMBOLS

HEADER A ————
HEADER B – – – –
HEADER A OR B — - — (SWING FACILITY)

NOTES:

1. FOR NOTES, SYMBOLS AND UNIT #2 ABBREVIATIONS SEE 26001 SH. 1, 2 & 3. FOR ALL OTHER ABBREVIATIONS SEE ANSI STANDARD Y1.1.
2. ALL DRAINS FROM THE R.B.C.C.W SYSTEM WILL DRAIN TO OPEN DRAINS IN THEIR RESPECTIVE AREAS. FOR FLOOR DRAINS P&ID SEE DRAWING 26024, (SHTS 1-3) A FUNNEL (Y) DENOTES THE OPEN (MSD) DRAIN SYSTEM.

CHANGES MADE TO THIS P&ID MUST ALSO BE REFLECTED ON THE INSERVICE INSPECTION PROGRAM DRAWING 25203-26700 SH. 17

FSAR FIGURE

SAFETY EVALUATION MAY BE REQUIRED PRIOR TO CHANGES

CAD

NOTE: MANUAL REVISIONS TO THIS DOCUMENT WHEN AS-BUILT ARE PROHIBITED.

OPERATIONS CRITICAL

Q.A.

REDRAWN INPART FROM 25203-26022 SH. 1 REV 15.

REVISIONS DURING CONSTRUCTION | P.A. NO.

Dominion Nuclear Connecticut Inc.

FOR Millstone Power Station

TITLE MILLSTONE NUCLEAR POWER STATION-UNIT 2
LICENSE RENEWAL DIAGRAM
R.B.C.C.W. SYSTEM
R.B.C.C.W. PMPS & HEAT EXCHANGERS
WATERFORD, CT

N/A	00	10-22 -02	INITIAL ISSUE PER REV 42	CLW			
	NO.	DATE	REVISIONS	BY	CHK.	APP.	APP.

ISSUED PER MASTER DRAWING

BY | CHKD. | APP. | APP.
DATE | DATE | DATE | DATE
SCALE | DWG. NO. 25203-LR26022 SH. 1 OF 6 | 0

COMPONENTS SUBJECT TO AGING MANAGEMENT REVIEW	
2326A	SERVICE WATER
2330A	REACTOR BUILDING CLOSED COOLING WATER
2311	SAMPLING
2340B	PRIMARY MAKEUP WATER

NOTE: SOME SHADED LINES MAY CONTAIN COMPONENTS FROM MORE THAN ONE SYSTEM.

Submitted by SEKULIC on Monday December 22 2003 at 07:38:38 AM EST

D049