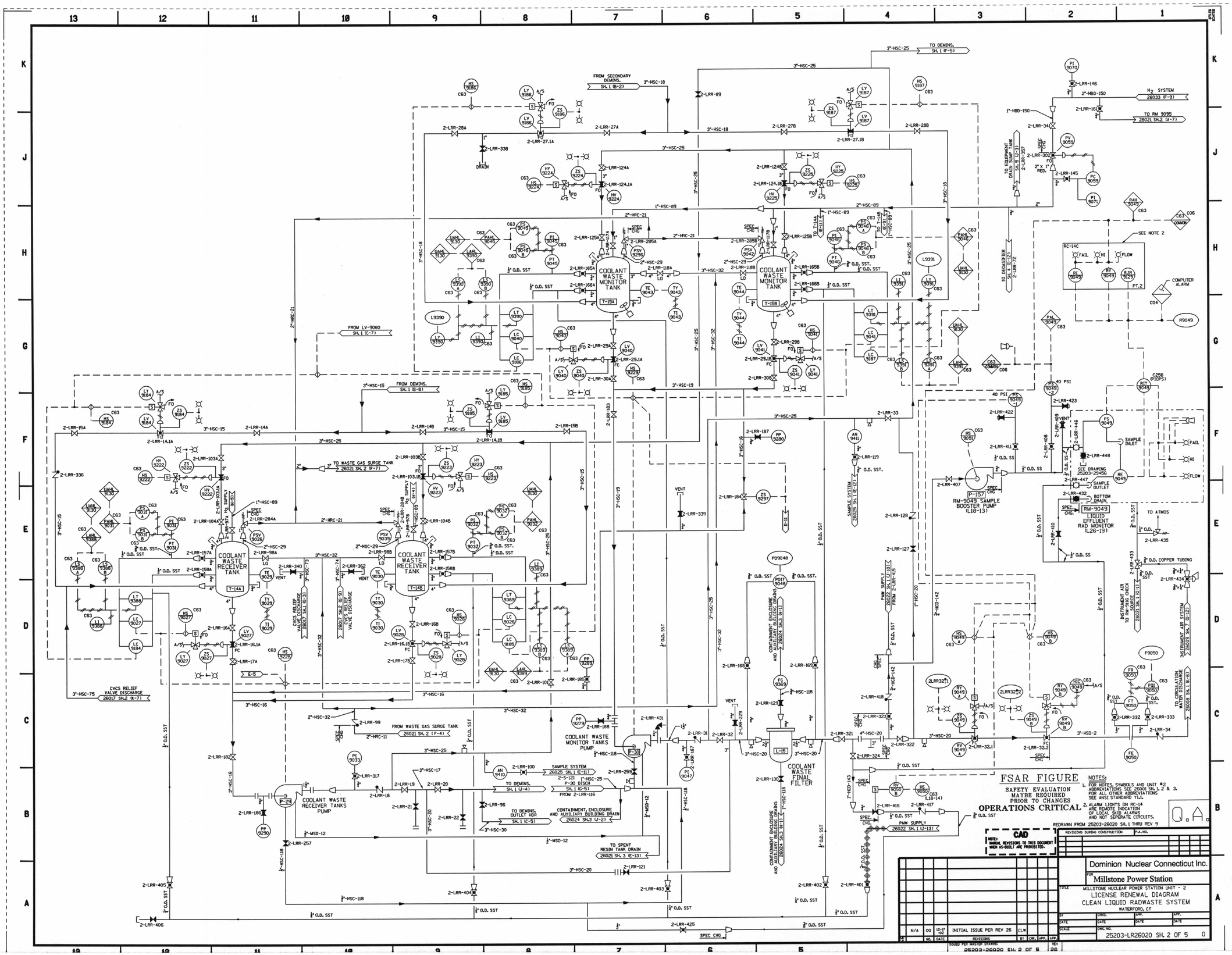

Submitted by SEKULIC on Monday December 22 2003 at 07:39:08 AM EST

D044