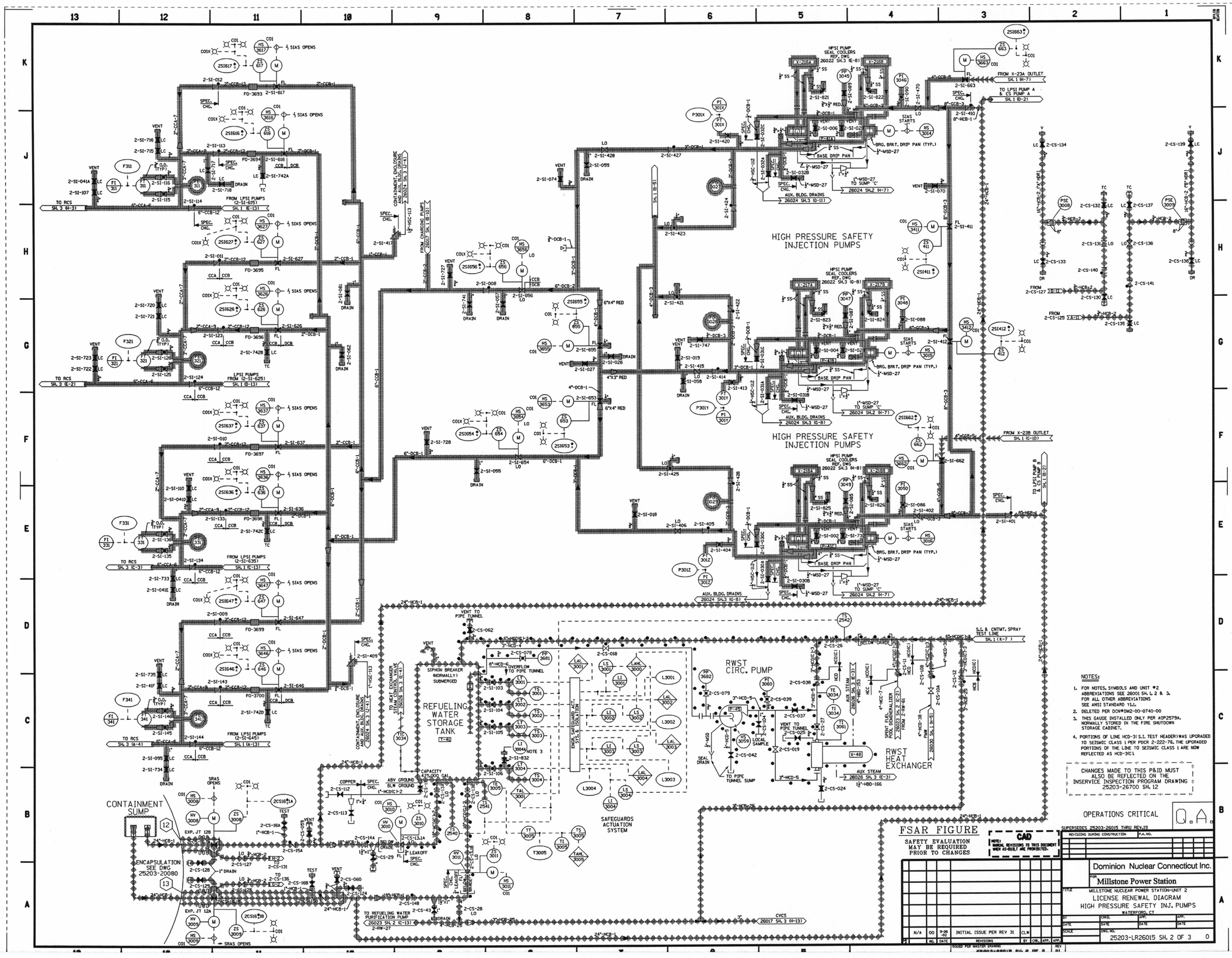

NOTES:

1. FOR NOTES, SYMBOLS AND UNIT #2 ABBREVIATIONS SEE 26001 SH. 1, 2 & 3. FOR ALL OTHER ABBREVIATIONS SEE ANSI STANDARD Y14.
2. DELETED PER DCN#0M2-00-0740-00
3. THIS GAUGE INSTALLED ONLY PER AOP2579A. NORMALLY STORED IN THE FIRE SHUTDOWN STORAGE CABINET.
4. PORTIONS OF LINE HCD-31 S.I. TEST HEADER)WAS UPGRADED TO SEISMIC CLASS I PER PDCR 2-222-76. THE UPGRADED PORTIONS OF THE LINE TO SEISMIC CLASS I ARE NOW REFLECTED AS HCD-31C1.

CHANGES MADE TO THIS P&ID MUST ALSO BE REFLECTED ON THE INSERVICE INSPECTION PROGRAM DRAWING 25203-26700 SH. 12

OPERATIONS CRITICAL

Q.A.

FSAR FIGURE

SAFETY EVALUATION MAY BE REQUIRED PRIOR TO CHANGES

CAD

NOTE: MANUAL REVISIONS TO THIS DOCUMENT MADE AS-BUILT ARE PROHIBITED.

SUPERSEDES 25203-26015 THRU REV.19

REVISIONS DURING CONSTRUCTION	PLA.NO.

NO.	DATE	REVISIONS	BY	CHK.	APP.	APP.
N/A	00	9-26-02	INITIAL ISSUE PER REV 31	CLW		

ISSUED FOR MASTER DRAWING

REV 31

Dominion Nuclear Connecticut Inc.

FOR: Millstone Power Station

TITLE: MILLSTONE NUCLEAR POWER STATION-UNIT 2
LICENSE RENEWAL DIAGRAM
HIGH PRESSURE SAFETY INJ. PUMPS
WATERFORD, CT

BY	CHKD.	APP.	APP.
DATE	DATE	DATE	DATE

SCALE | DWG. NO. 25203-LR26015 SH. 2 OF 3 | 0

COMPONENTS SUBJECT TO AGING MANAGEMENT REVIEW

23SIG	SAFETY INJECTION
23SPA	CONTAINMENT SPRAY
23SW	SHUTDOWN COOLING
23SB	REFUELING WATER STORAGE TANK & CONTAINMENT SUMP

NOTE: SOME SHADED LINES MAY CONTAIN COMPONENTS FROM MORE THAN ONE SYSTEM.

DBS

Submitted by SEKULIC on Monday December 22 2003 at 07:40:02 AM EST