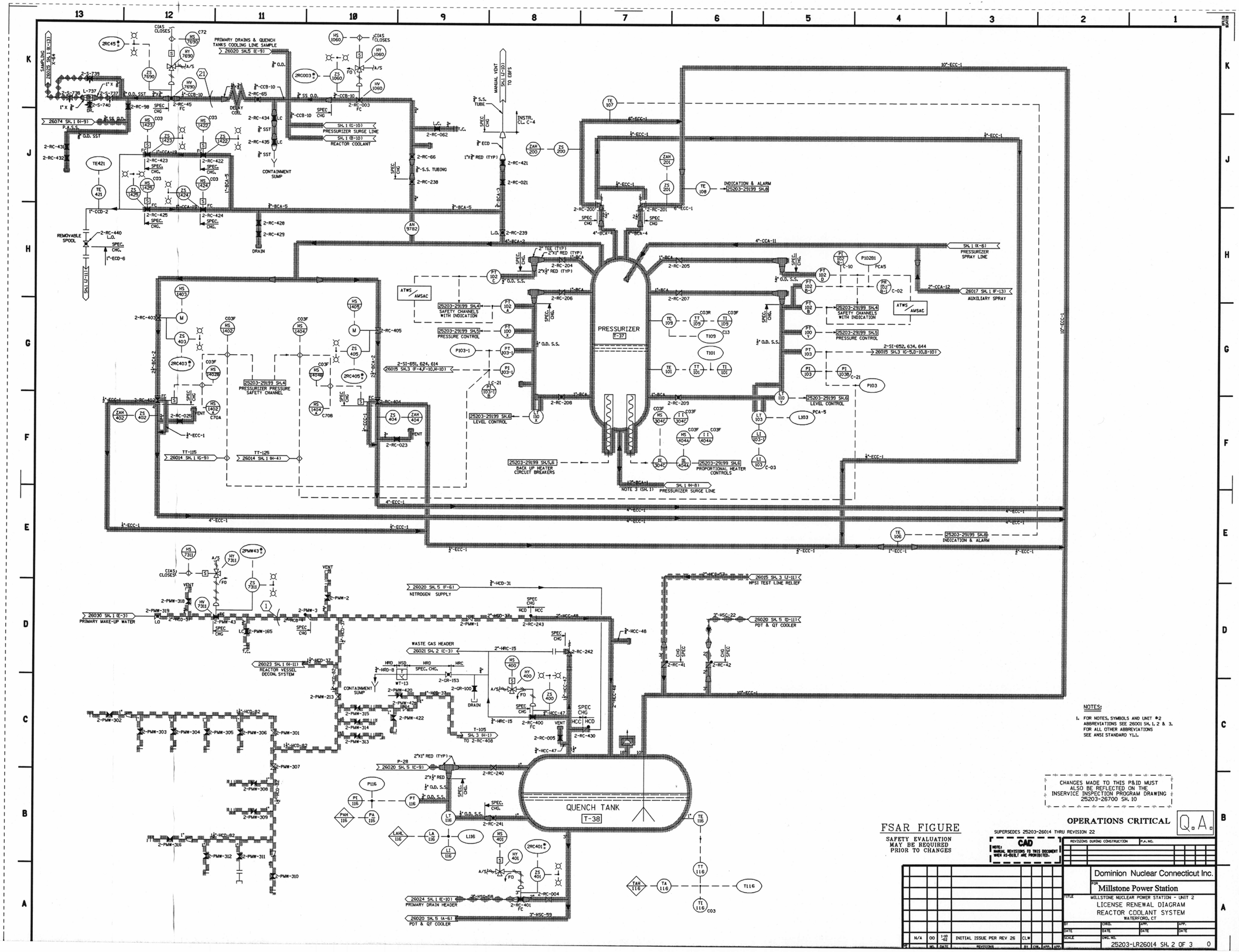

Submitted by SEKULIC on Monday December 22 2003 at 07:40:20 AM EST

D032