# AUTO SPRINKLER DELUGE VALVES

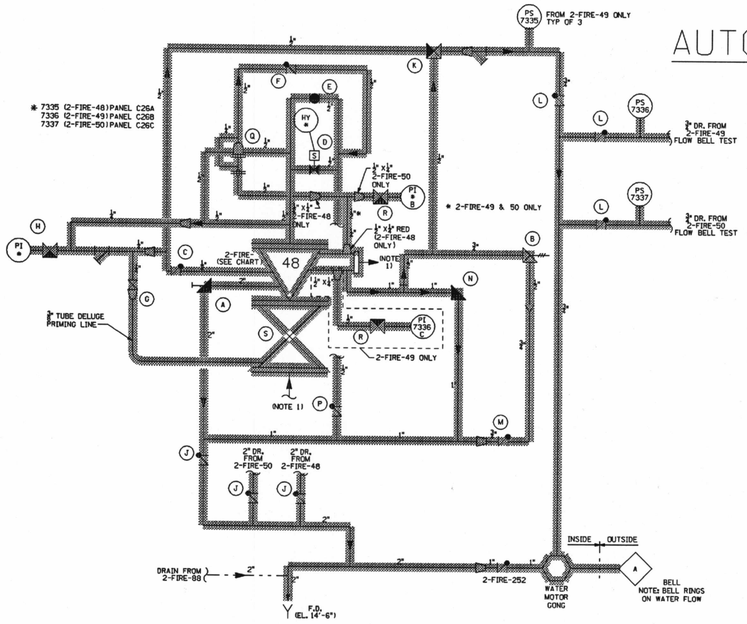


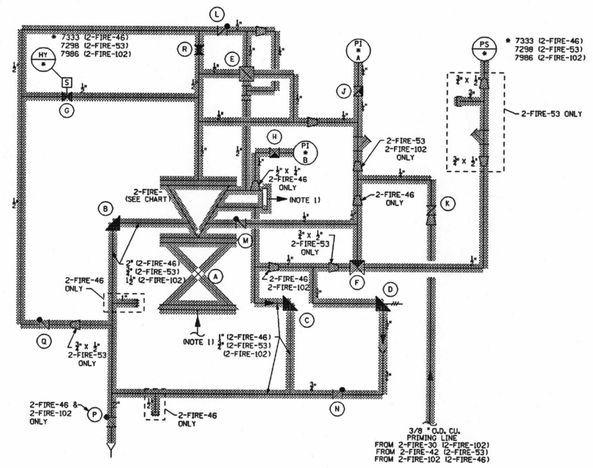


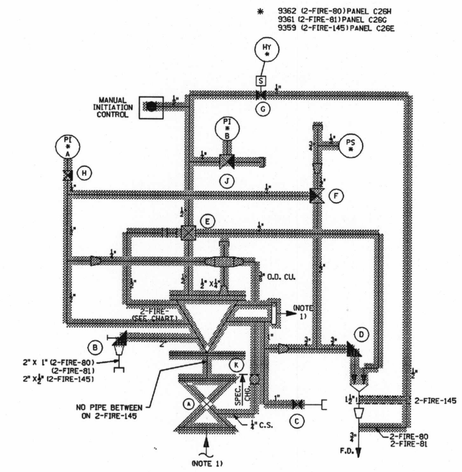


| VALVE CHART | | | | |
|---|---|---|---|---|
| LETTER DESIG. | VALVE #2-FIRE- 48 (A-12) | 49 (C-12) | 50 (B-12) | DESCRIPTION |
| A | 202 | 203 | 204 | DELUGE VALVE DR. (OUTLET) |
| B | 238 | 206 | 207 | FLOW BELL TEST VALVE INLET DRAIN |
| C | 208 | 209 | 210 | FLOW BELL TEST VALVE UPSTREAM CHECK |
| D | 211 | 212 | 213 | DELUGE AUTO INITIATION |
| E | 214 | 215 | 216 | DELUGE MANUAL INITIATION |
| F | 217 | 218 | 219 | PORV OUTLET CHECK |
| G | 220 | 221 | 222 | DELUGE PRIMING LINE ISOLATION |
| H | 223 | 224 | 225 | PI ISOLATION |
| J | 226 | 228 | 227 | DELUGE INLET DRAIN CHECK |
| K | 229 | 230 | 231 | FLOW BELL TEST VALVE |
| L | 232 | 233 | 234 | FLOW BELL TEST VALVE OUTLET CHECK |
| M | 235 | 236 | 237 | DELUGE OUTLET DISCH. CHECK |
| N | 205 | 239 | 240 | DELUGE VALVE DR. (OUTLET) |
| P | 244 | 245 | 246 | DELUGE AUTO/MAN. INIT. DR. CHECK |
| Q | 255 | 256 | 257 | DELUGE PORV |
| R | 241 | 242 | 243 | PI ISOLATION |
| S | 71 | 70 | 69 | DELUGE ISOLATION |

| VALVE CHART | | | | |
|---|---|---|---|---|
| LETTER DESIG. | DELUGE VALVE #2-FIRE- 46 (D-9) | 53 (B-8) | 102 (C-9) | DESCRIPTION |
| A | 103 | 42 | 101 | DELUGE VALVE ISOLATION |
| B | 285 | 301 | 317 | DELUGE VALVE INLET DR. |
| C | 286 | 302 | 318 | DELUGE VALVE OUTLET DR. |
| D | 287 | 303 | 319 | FLOW BELL TEST VALVE RELIEF VALVE |
| E | 288 | 304 | 320 | PORV |
| F | 289 | 305 | 321 | FLOW BELL TEST VALVE |
| G | 290 | 306 | 322 | DELUGE INITIATION SOV |
| H | 291 | 307 | 323 | PI ISOLATION |
| J | 292 | 308 | 324 | PI ISOLATION |
| K | 293 | 309 | 325 | PRIMING LINE ISOLATION |
| L | 294 | 310 | 326 | PORV OUTLET CHECK |
| M | 295 | 311 | 327 | DELUGE AUTO/MAN. INIT. DR. CHECK |
| N | 296 | 312 | 328 | DRAIN LINE CHECK |
| P | 297 | | 329 | DRAIN LINE CHECK |
| Q | 298 | 314 | 330 | DELUGE INIT. SOV OUTLET CHECK |
| R | 299 | 315 | 331 | DELUGE MANUAL INITIATION |

| VALVE CHART | | | | |
|---|---|---|---|---|
| LETTER DESIG. | DELUGE VALVE 2-FIRE- 80 (H-10) | 81 (H-8) | 145 (D-6) | DESCRIPTION |
| A | 22 | 24 | 144 | DELUGE VALVE ISOLATION |
| B | 159 | 161 | 151 | DELUGE VALVE INLET DR. |
| C | 375 | 384 | 187 | DELUGE VALVE OUTLET DR. |
| D | 376 | 385 | 393 | FLOW BELL TEST VALVE RELIEF VALVE |
| E | 377 | 386 | 394 | PORV |
| F | 378 | 387 | 395 | FLOW BELL TEST VALVE |
| G | 379 | 388 | 396 | DELUGE INITIATION SOV |
| H | 380 | 389 | 397 | PI ISOLATION |
| J | 381 | 390 | 398 | PI ISOLATION |
| K | 382 | 391 | 399 | PRIMING LINE ISOLATION |

# AUTO SPRINKLER ALARM CHECK VALVE DETAILS

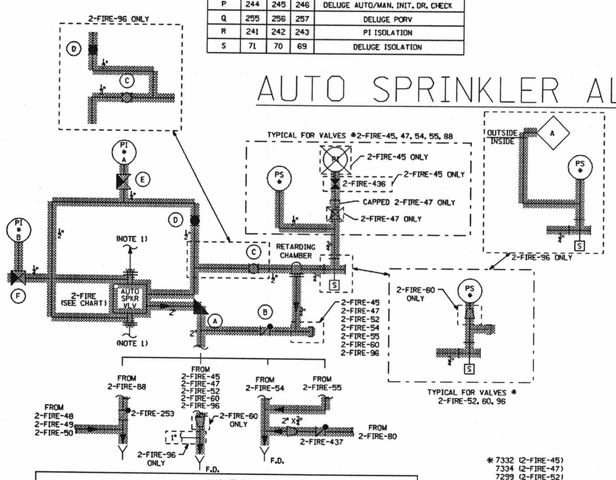


| VALVE CHART | | | | | | | | | |
|---|---|---|---|---|---|---|---|---|---|
| LETTER DESIG. | ALARM CHECK VALVE #2-FIRE- 45 (D-8) | 47 (E-11) | 52 (B-5,6) | 54 (H-7) | 55 (H-11) | 60 (J-6) | 88 (D-11) | 96 (H-12) | DESCRIPTION |
| A | 332 | 338 | 247 | 344 | 350 | 356 | 362 | 368 | ALARM CHECK VALVE DRAIN ISOLATION |
| B | 333 | 339 | 249 | 345 | 351 | 357 | 363 | 369 | PORV DRAIN CHECK |
| C | 334 | 340 | 248 | 346 | 352 | 358 | 364 | 370 | RETARD CHAMBER INLET ISOLATION |
| D | 335 | 341 | 254 | 347 | 353 | 359 | 365 | 371 | ALARM CHECK BYPASS ISOL. |
| E | 336 | 342 | 250 | 348 | 354 | 360 | 366 | 372 | ALARM CHECK INLET PI ISOLATION |
| F | 337 | 343 | 251 | 349 | 355 | 361 | 367 | 373 | ALARM CHECK OUTLET PI ISOLATION |

* 7332 (2-FIRE-45)
7334 (2-FIRE-47)
7299 (2-FIRE-52)
7437 (2-FIRE-54)
7297 (2-FIRE-55)
7296 (2-FIRE-60)
8613 (2-FIRE-88)
7963 (2-FIRE-96)

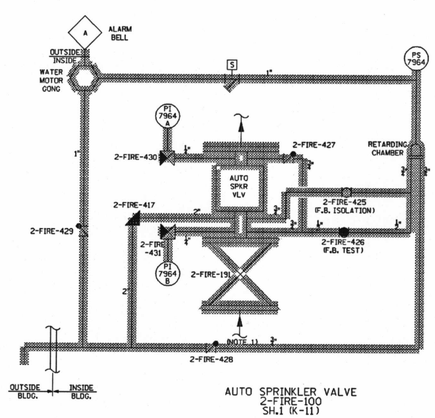


AUTO SPRINKLER VALVE
2-FIRE-100
SH.1 (K-11)

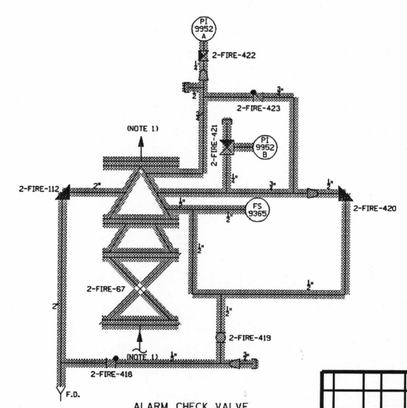


ALARM CHECK VALVE
2-FIRE-175
SH.1, (F-6)

NOTES:
1. FOR CONTINUATIONS OF FIRE SYSTEM HEADERS SEE DWG 25203-26011 SH. 1.
2. WORK THIS DRAWING WITH 25203-26011 SH.1.

OPERATIONS CRITICAL

Q.A.

CAD
NOTE: MANUAL REVISIONS TO THIS DOCUMENT WHEN AS-BUILT ARE PROHIBITED.

| REVISIONS DURING CONSTRUCTION | P.A. NO. |
|---|---|
| | |

| NO. | DATE | REVISIONS | BY | CHK. | APP. | APP. |
|---|---|---|---|---|---|---|
| N/A | 00 | 2-7-00 INITIAL ISSUE PER REV 5 | CLW | | | |

ISSUED FOR MASTER DRAWING

Dominion Nuclear Connecticut Inc.
FOR Millstone Power Station
TITLE MILLSTONE NUCLEAR POWER STATION-UNIT 2
LICENSE RENEWAL DIAGRAM
FIRE PROTECTION AUTO SPRINKLER VALVE DETS.
WATERFORD, CT

| BY | CHKD. | APP. | APP. |
|---|---|---|---|
| DATE | DATE | DATE | DATE |
| SCALE | DWG. NO. 25203-LR26011 SH. 5 OF 6 | | 0 |

COMPONENTS SUBJECT TO AGING MANAGEMENT REVIEW
2341 FIRE PROTECTION

NOTE: SOME SHADED LINES MAY CONTAIN COMPONENTS FROM MORE THAN ONE SYSTEM.

Submitted by SEKULIC on Monday December 22 2003 at 07:40:43 AM EST

D029