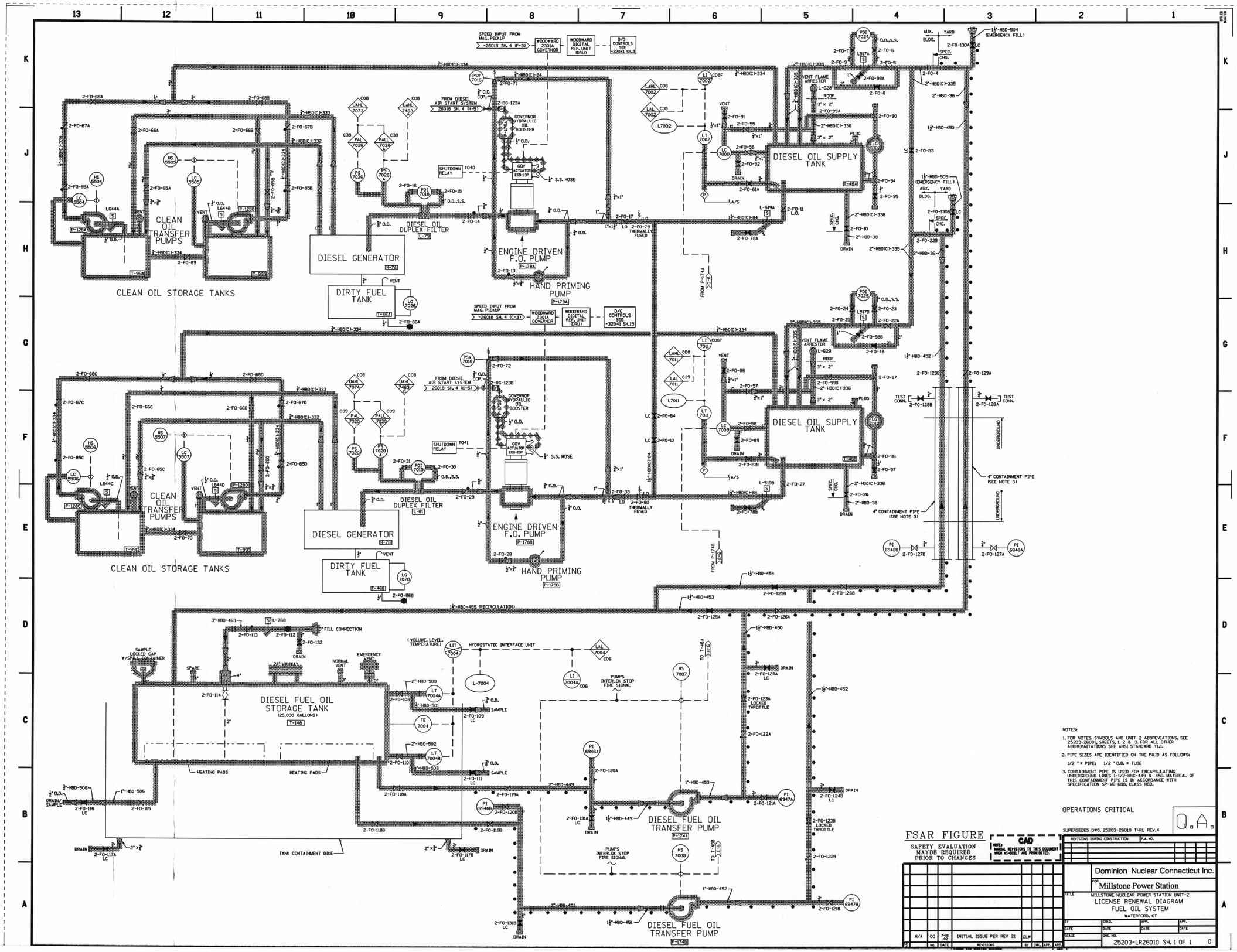

ubmitted by SEKULIC on Monday December 22 2003 at 07:41:07 AM EST

D025