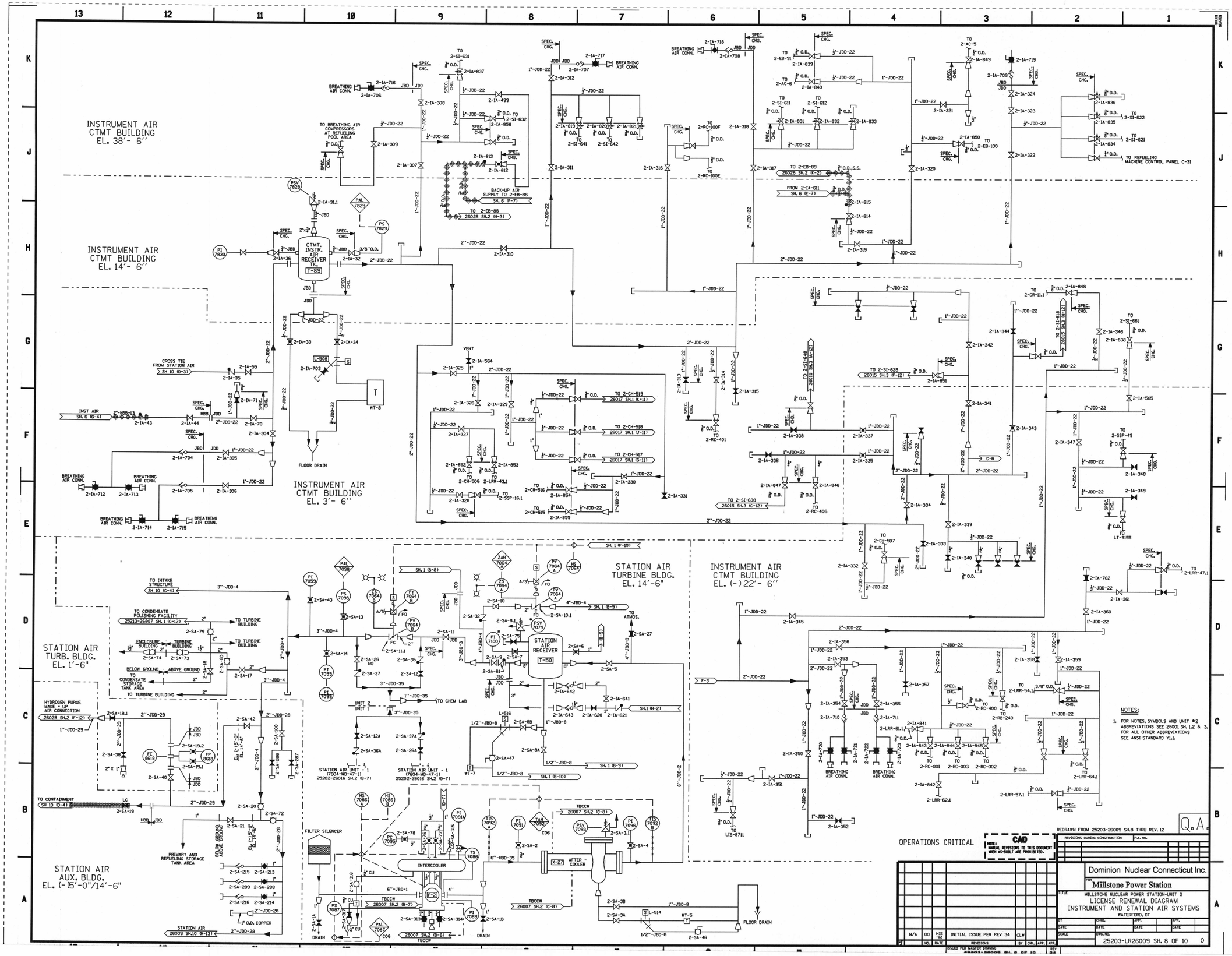

Submitted by SEKULIC on Monday December 22 2003 at 07:41:19 AM EST

D23